■ ENGINE ■

SERVICE MANUAL

امداد خودرو فارما

تلفن شبانه روزی: ۰۲۱-۸۸۸۶۲۰۸۵

FarmaSOS.com

SSANGYONG MOTOR CO., LTD.

PYUNGTAEK, KOREA

SERVICE MANUAL(vol. 1 of 2)

REXTON

FOREWORD

This manual includes procedure for maintenance, adjustment, service operation and removal and installation of components.

All information, illustrations and specifications contained in this manual are based on the latest product information available at the time of manual approval.

The right is reserved to make changes at any time without notice.

امداد خودرو فارما
تلفن شبانه روزی: ۰۲۱-۸۸۸۶۲۰۸۵
FarmaSOS.com

SSANGYONG MOTOR CO., LTD.
PYUNGTAEK, KOREA

SECTION INDEX

VOLUME 1 OF 2

GENERAL INFORMATION	DI0A
ENGINE ASSEMBLY	DI01
ENGINE HOUSING	DI02
INTAKE SYSTEM	DI03
EXHAUST SYSTEM	DI04
LUBRICATION SYSTEM	DI05
COOLING SYSTEM	DI06
FUEL SYSTEM	DI07
ENGINE CONTROL SYSTEM	DI08
ELECTRIC DEVICES AND SENSORS	DI09
DIAGNOSIS	DI10

DI ENGINE

CONTENTS

GENERAL INFORMATION DI0A

ENGINE ASSEMBLY DI01

ENGINE HOUSING DI02

INTAKE SYSTEM DI03

EXHAUST SYSTEM DI04

LUBRICATION SYSTEM DI05

COOLING SYSTEM DI06

FUEL SYSTEM DI07

ENGINE CONTROL SYSTEM DI08

ELECTRIC DEVICES AND SENSORS . DI09

DIAGNOSIS DI10

امداد خودرو فارما
تلفن شبانه روزی: ۰۲۱-۸۸۸۶۰۸۵۵
FarmaSOS.com

SECTION DI0A

GENERAL INFORMATION

امداد خودرو فارما

تلفن شبانه روزی: ۰۲۱-۸۸۸۶۲۰۸۵

FarmaSOS.com

SECTION DI0A

GENERAL INFORMATION

Table of Contents

CLEANNESS DI0A-3

STRUCTURE DI0A-8

ENGINE CONTROLS DI0A-11

ECU related components DI0A-11

Engine and sensors DI0A-12

Electrical components and pre heating system DI0A-13

INTAKE SYSTEM DI0A-14

Intake air flow chart DI0A-15

INTAKE SYSTEM DI0A-16

Exhaust air flow chart DI0A-17

LUBRICATION SYSTEM DI0A-18

COOLING SYSTEM DI0A-19

Coolant flow chart DI0A-20

FUEL SYSTEM DI0A-21

Fuel supply system DI0A-22

GENERAL SPECIFICATIONS DI0A-23

Vehicle specifications DI0A-23

Maintenance DI0A-26

VEHICLE IDENTIFICATION DI0A-28

HOW TO USE AND MAINTAIN WORKSHOP MANUAL DI0A-30

Consists of workshop manual DI0A-30

Manual description DI0A-30

Guidelines for service work safety DI0A-31

Lifting points DI0A-36

Tightening torque of standard bolts DI0A-37

ایران خودرو فارما

FarmaSOS.com

CHANGED BY	
EFFECTIVE DATE	
AFFECTED VIN	

امداد خودرو فارما

تلفن شبانه روزی: ۸۸۸۶۲۰۸۵-۰۲۱

FarmaSOS.com

CLEANNESS

Cleanness of DI Engine Fuel System and Service Procedures

The fuel system for DI engine consists of transfer (low pressure) line and high pressure line. Its highest pressure reaches over 1600 bar. Some components in injector and HP pump are machined at the micrometer 100 μm of preciseness. The pressure regulation and injector operation are done by electric source from engine ECU. Accordingly, if the internal valve is stucked due to foreign materials, injector remains open. Even in this case, the HP pump still operates to supply high pressurized fuel. This increases the pressure to combustion chamber (over 250 bar) and may cause fatal damage to engine.

You can compare the thickness of injector nozzle hole and hair as shown in below figure (left side). The right side figure shows the clearance between internal operating elements.

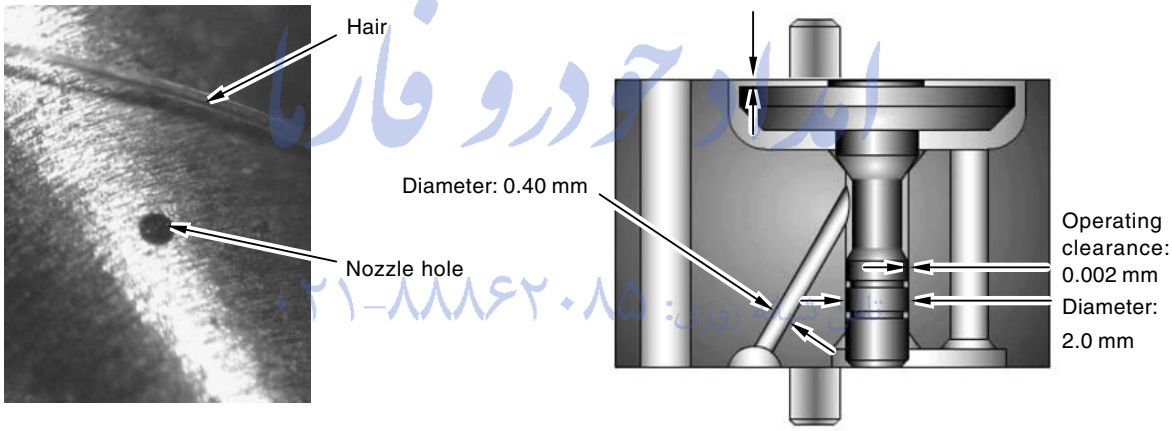

FarmaSOS.com

The core elements of fuel system has very high preciseness that is easily affected by dust or very small foreign material. Therefore, make sure to keep the preliminary works and job procedures in next pages. If not, lots of system problems and claims may arise.

CHANGED BY	
EFFECTIVE DATE	
AFFECTED VIN	

Job procedures

1. Always keep the workshop and lift clean (especially, from dust).
2. Always keep the tools clean (from oil or foreign materials).
3. Wear a clean vinyl apron to prevent the fuzz, dust and foreign materials from getting into fuel system. Wash your hands and do not wear working gloves.
4. Follow the below procedures before starting service works for fuel system.

Carefully listen the symptoms and problems from customer.

↓

Visually check the leaks and vehicle appearance on the wiring harnesses and connectors in engine compartment.

↓

Perform the diagnosis proceee with Scan-i
(refer to “DIAGNOSIS” section in this manual).

↓

Locate the fault. If the cause is from fuel system (from priming pump to injector, including return line), follow the step 1 through step 3 above.

FarmaSOS.com

5. If the problem is from HP pump, fuel supply line or injector, prepare the clean special tools and sealing caps to perform the diagnosis for DI engine fuel system in “DIAGNOSIS” section in this manual. At this point, thoroughly clean the related area in engine compartment.

Notice

Clean the engine compartment before starting service works.



Tool kit for high pressure line



Took kit for low pressure line

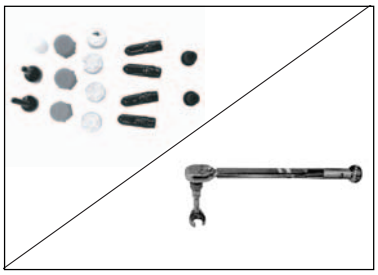

Removal tool box and cap kits

6. Follow the job procedures. If you find a defective component, replace it with new one.

Disconnect the negative battery cable.

↓

For safety reasons: check pressure is low before opening the HP systems (pipes)

↓

Use special tools and torque wrench to perform the correct works.

Once disconnected, the fuel pipes between HP pump and fuel rail and between fuel rail and each injector should be replaced with new ones. The pipes should be tightened to specified tightening torques during installation. Over or under torques out of specified range may cause damages and leaks at connections. Once installed, the pipes have been deformed according to the force during installtion, therefore they are not reusable.

The copper washer on injector should be replaced with new one. The injector holder bolt should be tightened to specified tightening torque as well. If not, the injection point may be deviated from correct position, and it may cause engine disorder.

↓

Plug the disconnected parts with sealing caps, and remove the caps immediately before replacing the components.

ایراد خودرو فارما
تلفن شبانه روزی: ۰۲۱-۸۸۸۶۲۰۸۵
FarmaSOS.com

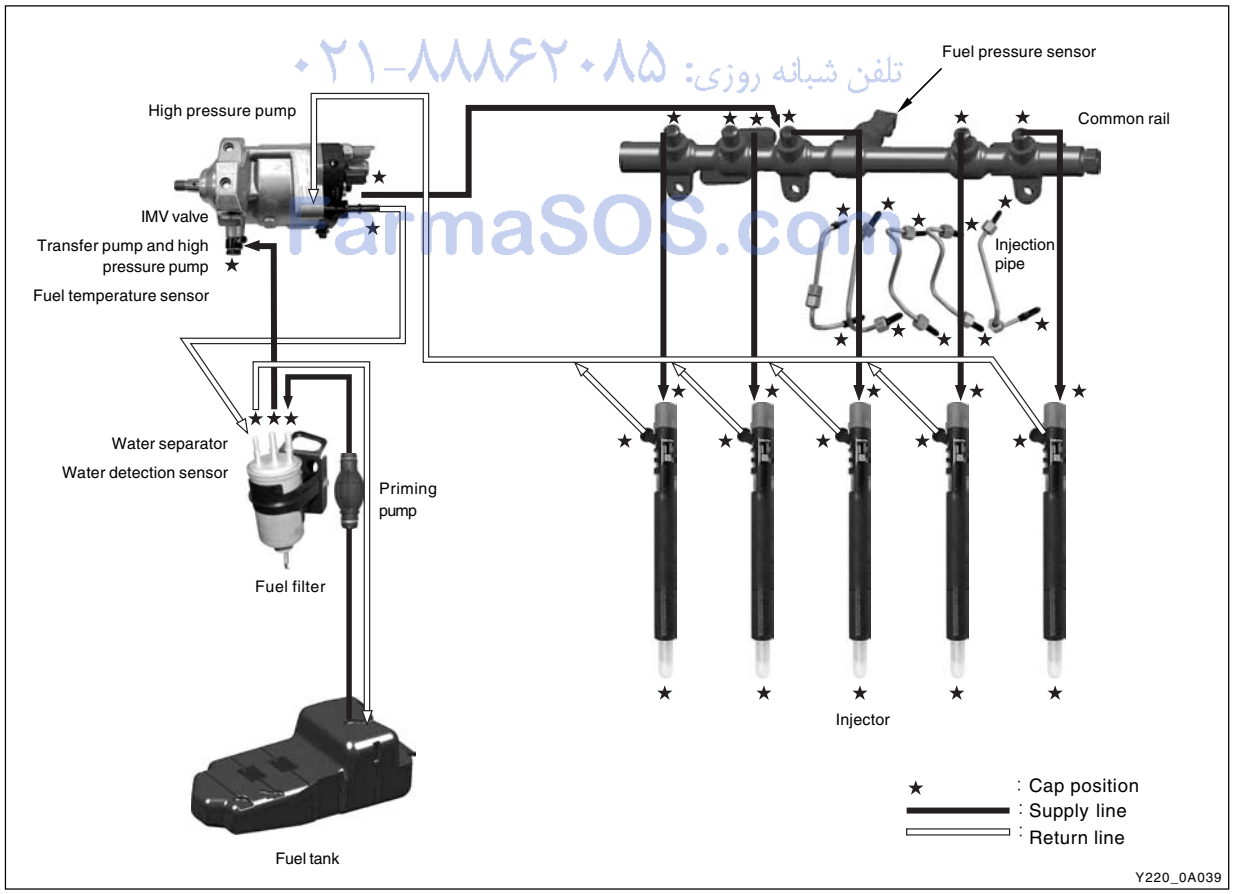

CHANGED BY	
EFFECTIVE DATE	
AFFECTED VIN	

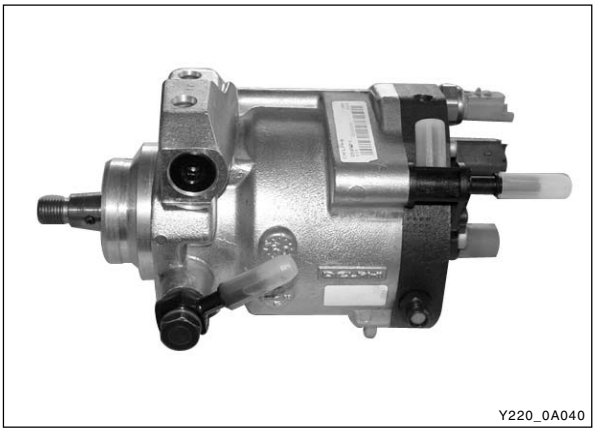
Y220_0A040

7. Plug the removed components with clean and undamaged sealing caps and store it into the box to keep the conditions when it was installed.
8. Clear the high pressure offset value by Scan-100 after replacing the high pressure pump.

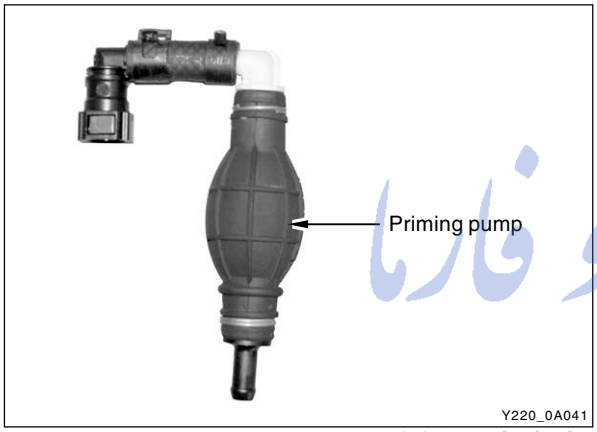

Y220_0A041

9. To supply the fuel to transfer line of HP pump press the priming pump until it becomes hard.

Warning

Do not crank engine before having filled pump.

امداد خودرو فارما
تلفن شبانه روزی: ۰۲۱-۸۸۸۶۲۰۸۵
FarmaSOS.com

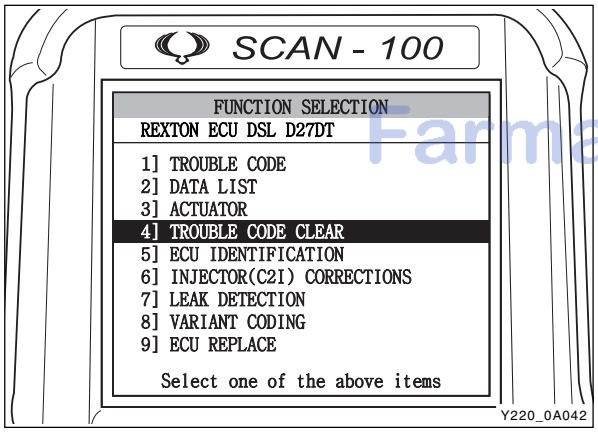

Y220_0A042

10. Check the installed components again and connect the negative battery cable. Start the engine and check the operating status.
11. With Scan-i, check if there are current faults and erase the history faults.

Note

For details, refer to "DI10 Diagnosis teable".

DI Engine and Its Expected Problems and Remedies Can be Caused by Water in Fuel

SYSTEM SUPPLEMENT AGAINST PARAFFIN SEPARATION.

In case of Diesel fuel, paraffin, one of the elements, can be separated from fuel during winter and then can stick on the fuel filter blocking fuel flow and causing difficult starting finally. Oil companies supply summer fuel and winter fuel by differentiating mixing ratio of kerosene and other elements by region and season. However, above phenomenon can be happened if stations have poor facilities or sell improper fuel for the season.
In case of DI engine, purity of fuel is very important factor to keep internal preciseness of HP pump and injector. Accordingly, more dense mesh than conventional fuel filter is used. To prevent fuel filter internal clogging due to paraffin separation, SYMC is using fuel line that high pressure and temperature fuel injected by injector returns through fuel filter to have an effect of built-in heater (see fuel system).

SYSTEM SUPPLEMENT AND REMEDY AGAINST WATER IN FUEL

As mentioned above, some gas stations supply fuel with excessive than specified water. In the conventional IDI engine, excessive water in the fuel only causes dropping engine power or engine hunting. However, fuel system in the DI engine consists of precise components so water in the fuel can cause malfunctions of HP pump due to poor lubrication of pump caused by poor coating film during high speed pumping and bacterization (under long period parking). To prevent problems can be caused by excessive water in fuel, water separator is installed inside of fuel filter. When fuel is passing filter, water that has relatively bigger specific gravity is accumulated on the bottom of the filter.


Y220_0A041

امداد خودرو فارسی
تلفن شبانه روزی: ۰۹۱۲۰۲۰۸۱۵
FarmaSOS.com

If water in the separator on the fuel filter exceeds a certain level, it will be supplied to HP pump with fuel, so the engine ECU turns on warning light ( ) on the meter cluster and buzzer if water level is higher than a certain level.

Due to engine layout, a customer cannot easily drain water from fuel filter directly, so if a customer checks in to change engine oil, be sure to perform water drain from fuel filter. (See fuel system for details.)

CHANGED BY	
EFFECTIVE DATE	
AFFECTED VIN	

STRUCTURE

Front view

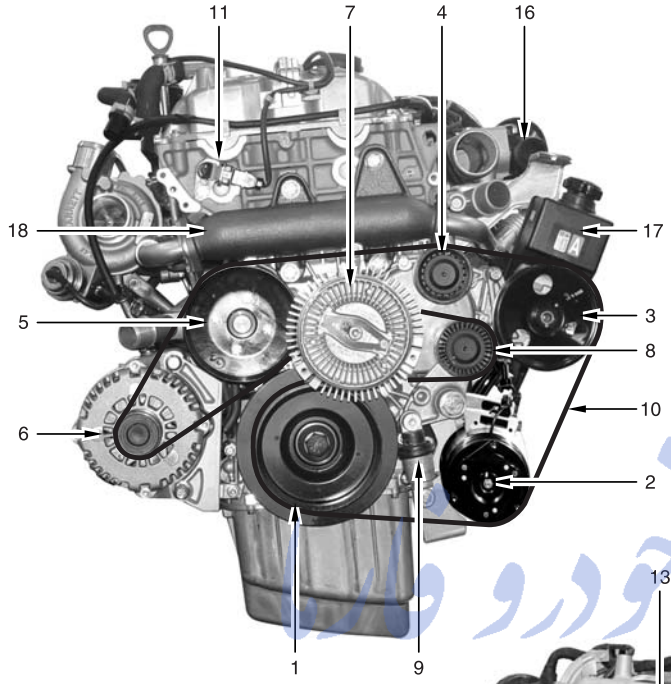

Rear view

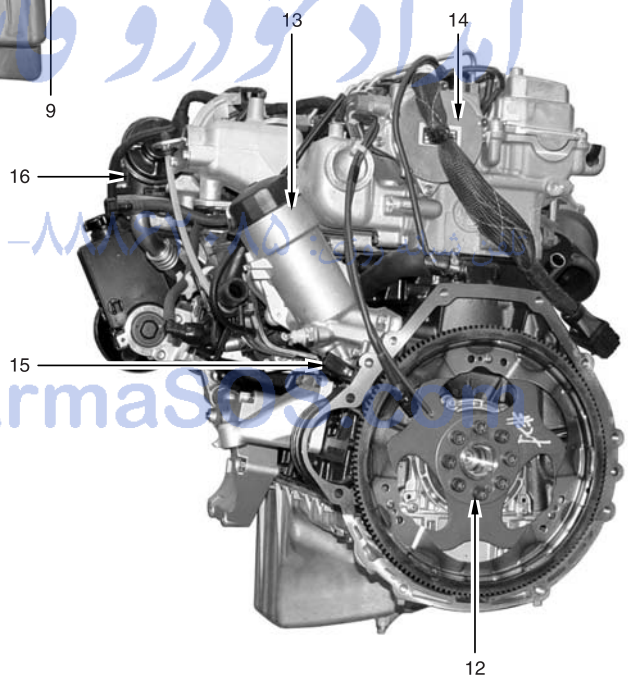

Y220_0A001

1. TVD (Torsional Vibration Damper)
2. Air conditioner compressor
3. Power steering pump pulley
4. Idle pulley
5. Water pump pulley
6. Alternator
7. Cooling fan pulley & viscos clutch
8. Aut tensioner pulley
9. Auto tensioner
10. Poly-groove belt
11. Cam position sensor
12. Drive plate (M/T: DMF)
13. Oil filter housing
14. Vacuum pump
15. Crank position sensor
16. EGR valve
17. Power steering pump
18. EGR center pipe

ایران خودرو دیزل
۰۲۱-۸۸۳۴۶۵۰۵
FarmaSoft.com

Top view

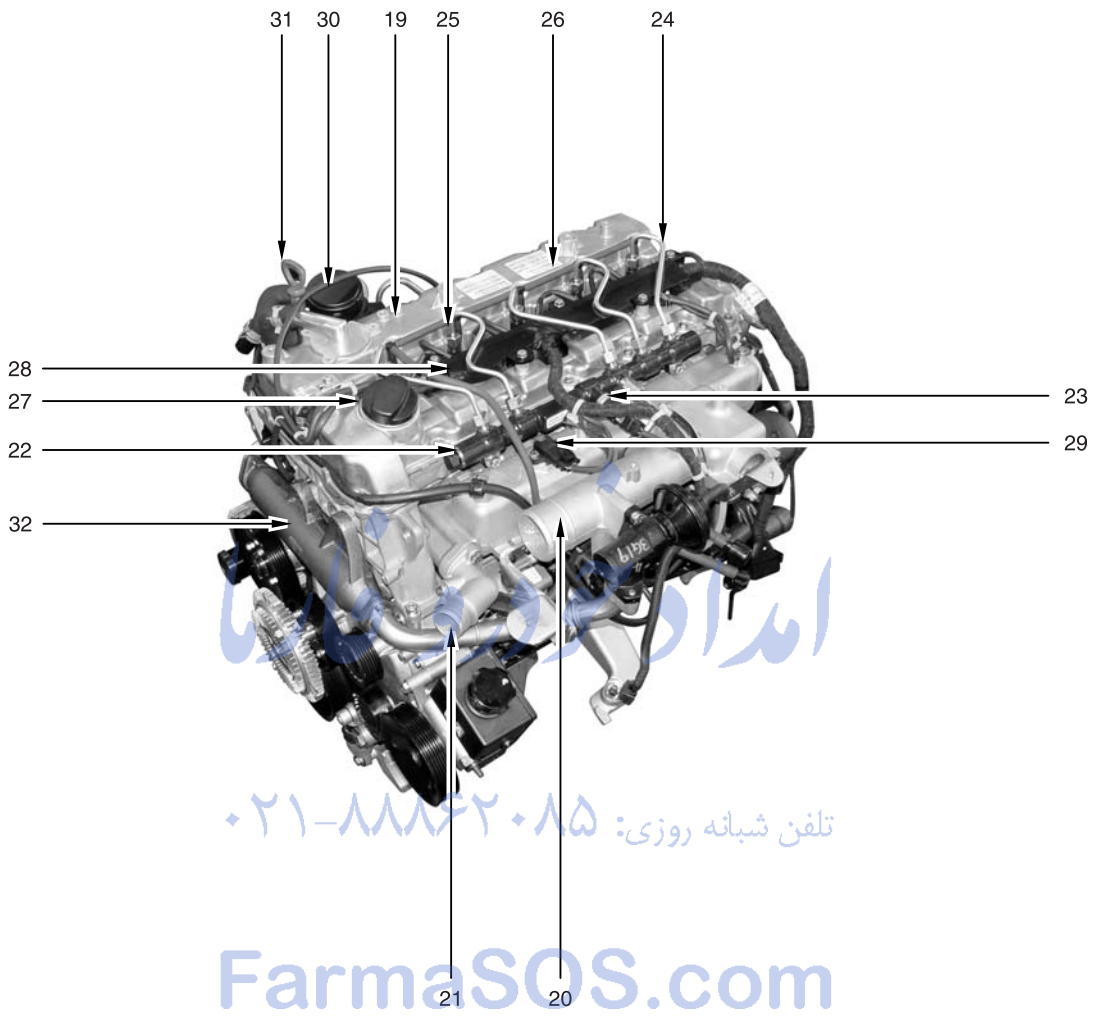

امداد خودرو ایرانیان
تلفن شبانه روزی: ۰۲۱-۸۸۸۶۲۰۸۵
FarmaSOS.com

Y220_0A002

19. Cylinder head cover
20. Intake manifold
21. Water outlet port
22. Common rail
23. Fuel pressure sensor
24. Fuel pipe
25. Injector
26. Fuel return line
27. Oil filler cap
28. Glow plug
29. Booster pressure sensor
30. Oil separator
31. Oil dipstic
32. EGR center pipe

CHANGED BY	
EFFECTIVE DATE	
AFFECTED VIN	

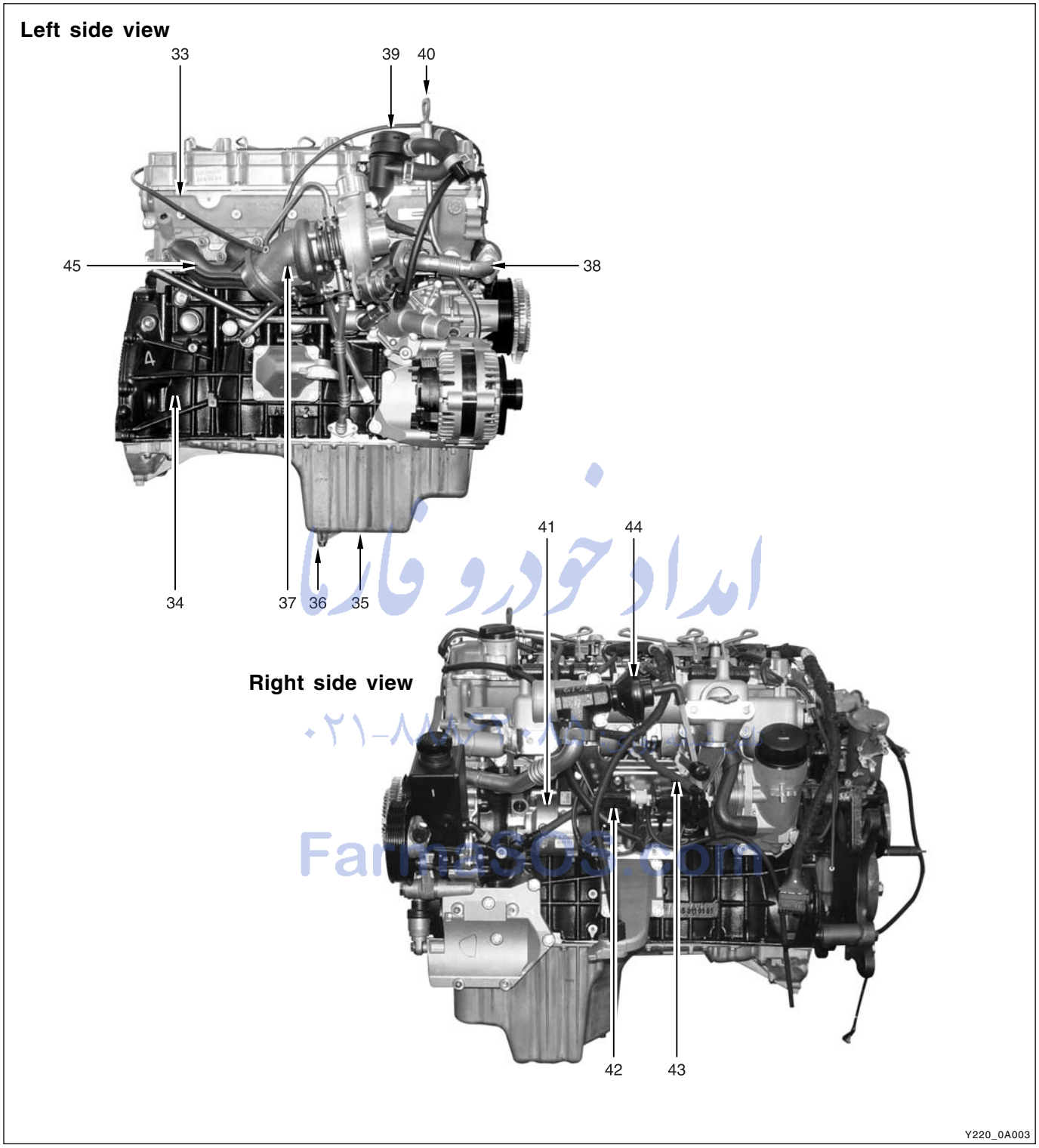

33. Cylinder head
34. Cylinder block
35. Oil pan
36. Drain plug
37. Turbocharger
38. EGR - RH pipe
39. Oil separator
40. Oil dipstic
41. HP pump
42. Turbocharger vacuum modulator
43. EGR valve vacuum modulator
44. EGR valve
45. Exhaust manifold

ENGINE CONTROLS

ECU RELATED COMPONENTS

ECU/barometric sensor



Cam position sensor



Fuel filter (water detection sensor)



Accelerator pedal sensor

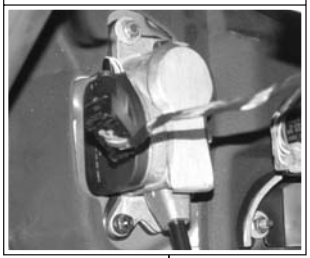

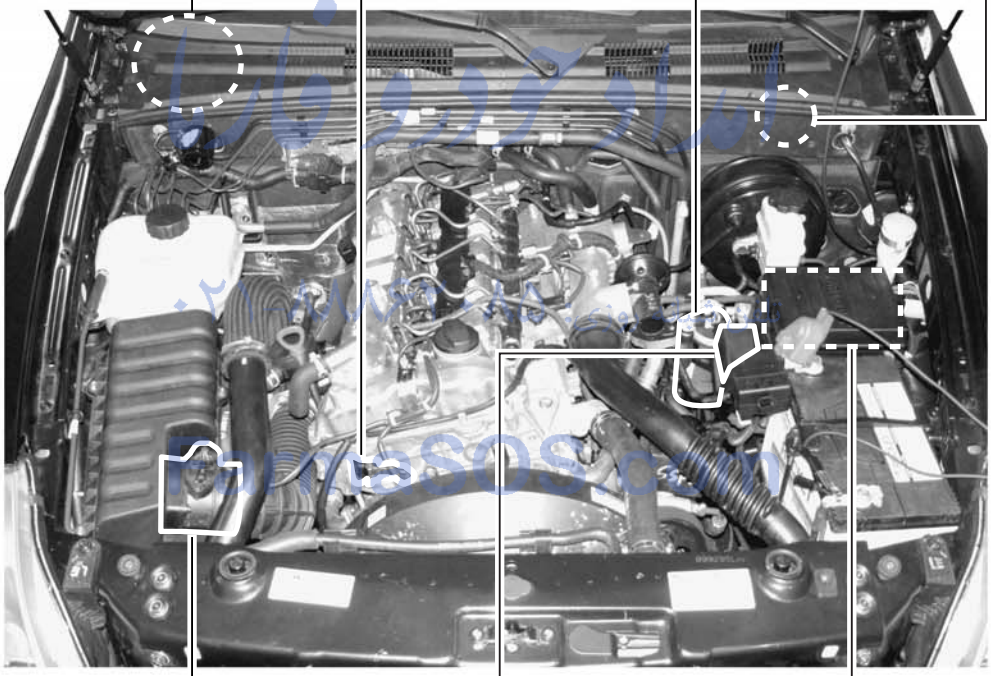

HFM sensor/intake air temperature sensor



Pre heating time relay



Main relay

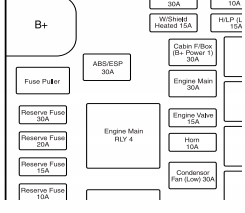

Y220_0A004

CHANGED BY	
EFFECTIVE DATE	
AFFECTED VIN	

ENGINE AND SENSORS

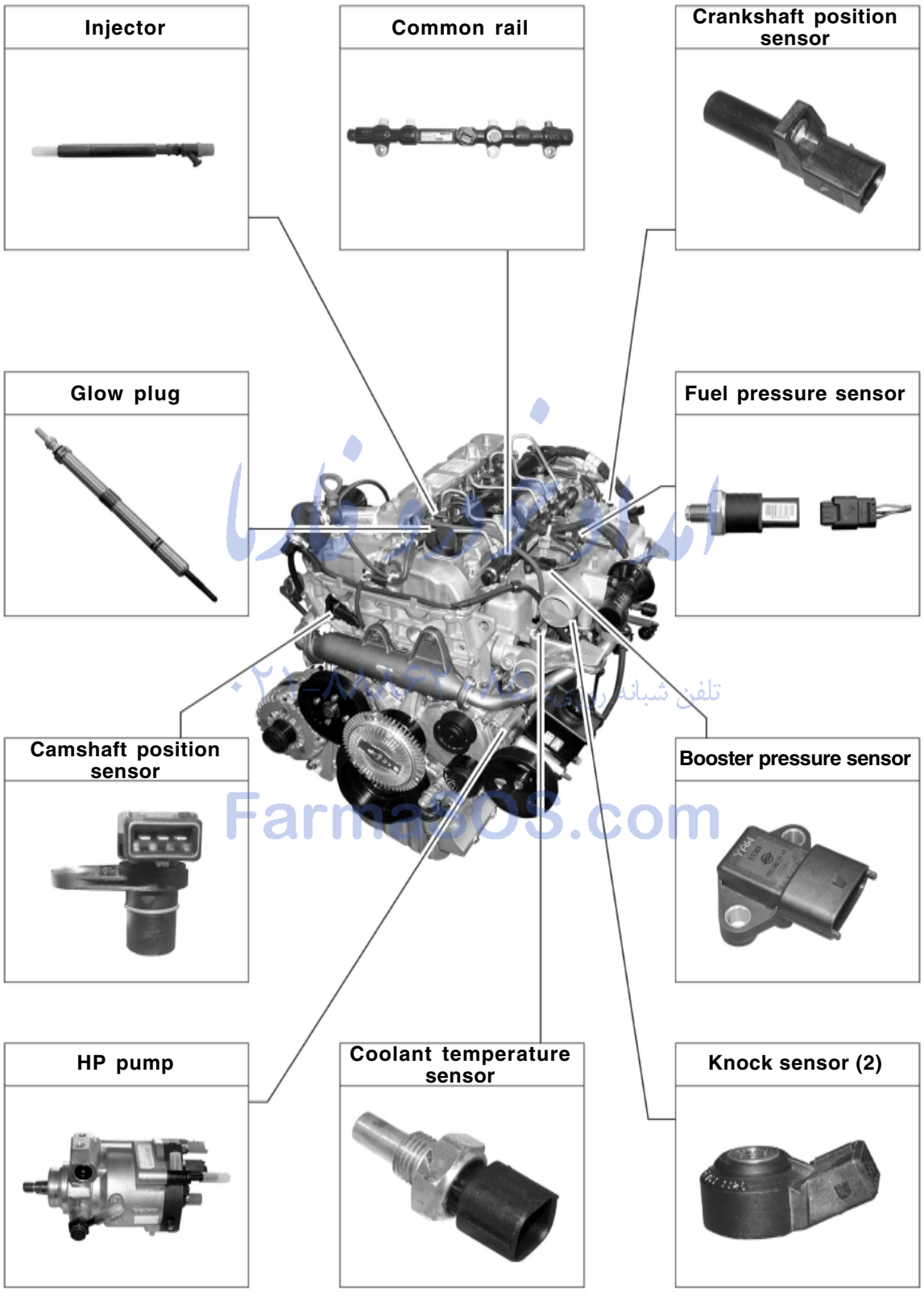

Farmas03.com

CHANGED BY	
EFFECTIVE DATE	
AFFECTED VIN	

ELECTRICAL COMPONENTS AND PRE HEATING SYSTEM

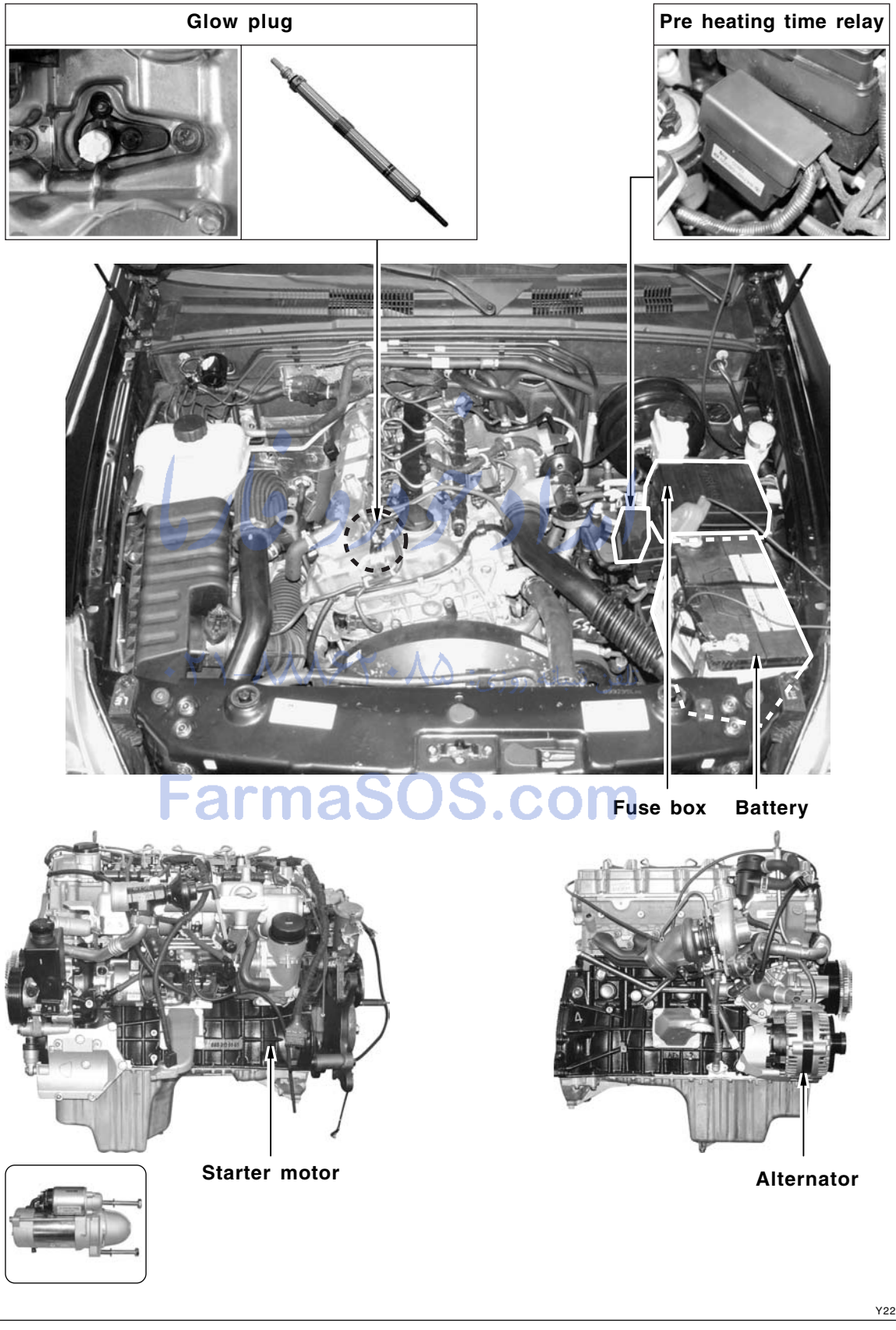

FarmaSOS.com

Y220_0A006

CHANGED BY	
EFFECTIVE DATE	
AFFECTED VIN	

INTAKE SYSTEM

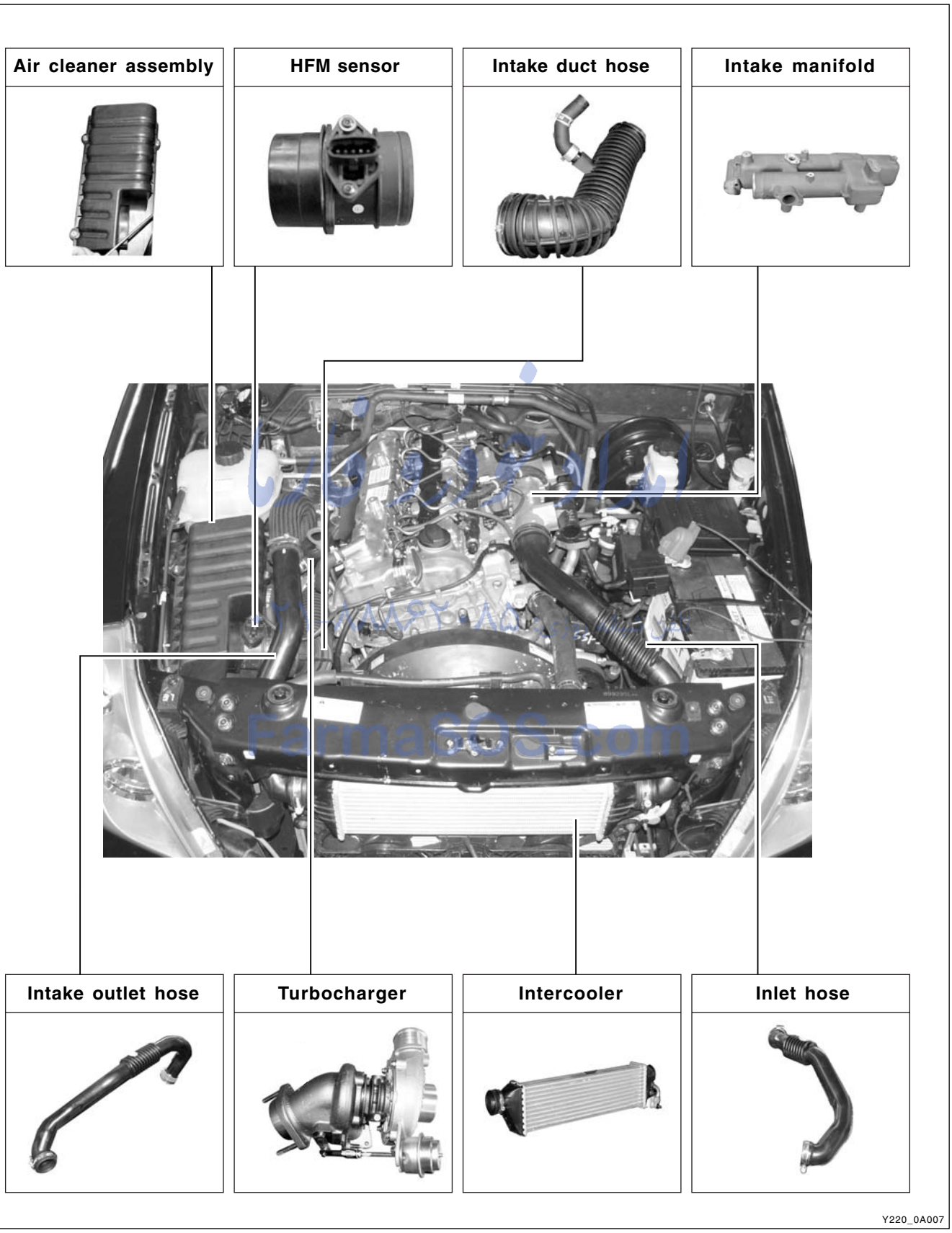

Y220_0A007

INTAKE AIR FLOW CHART

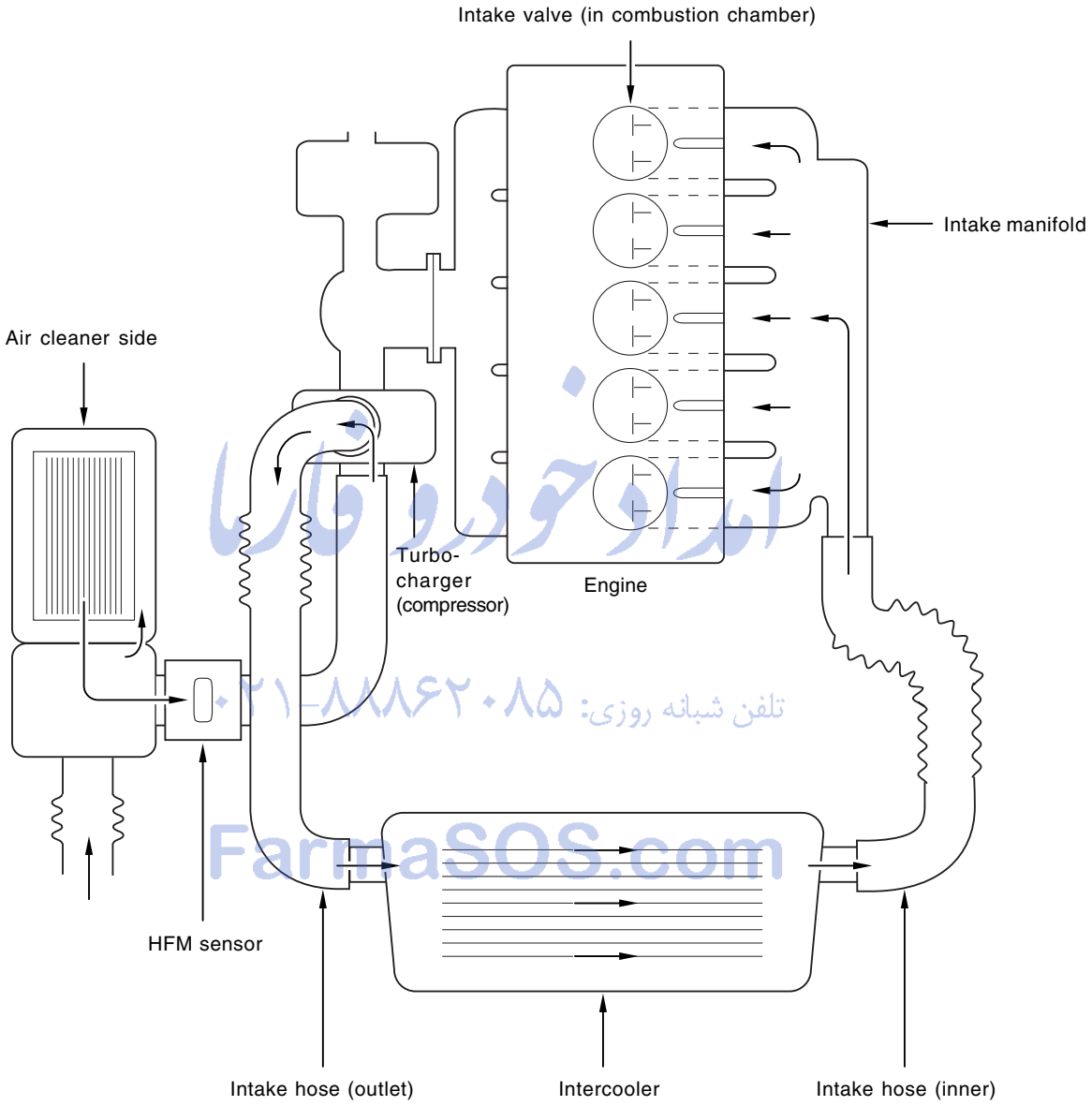

امداد خودرو فارما
تلفن شبانه روزی: ۰۲۱-۸۸۸۶۲۰۸۵
FarmaSOS.com

CHANGED BY	
EFFECTIVE DATE	
AFFECTED VIN	

INTAKE SYSTEM

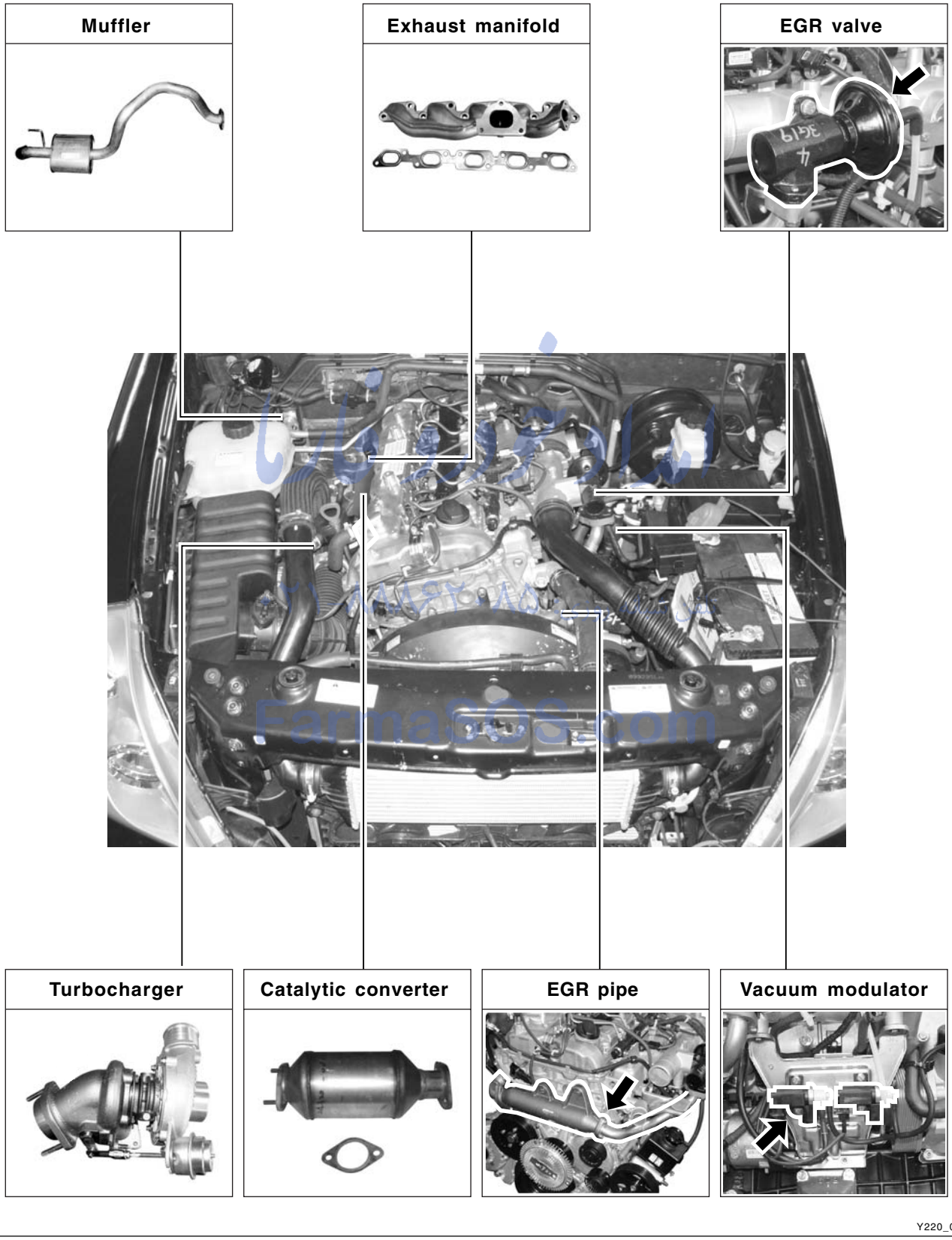

EXHAUST AIR FLOW CHART

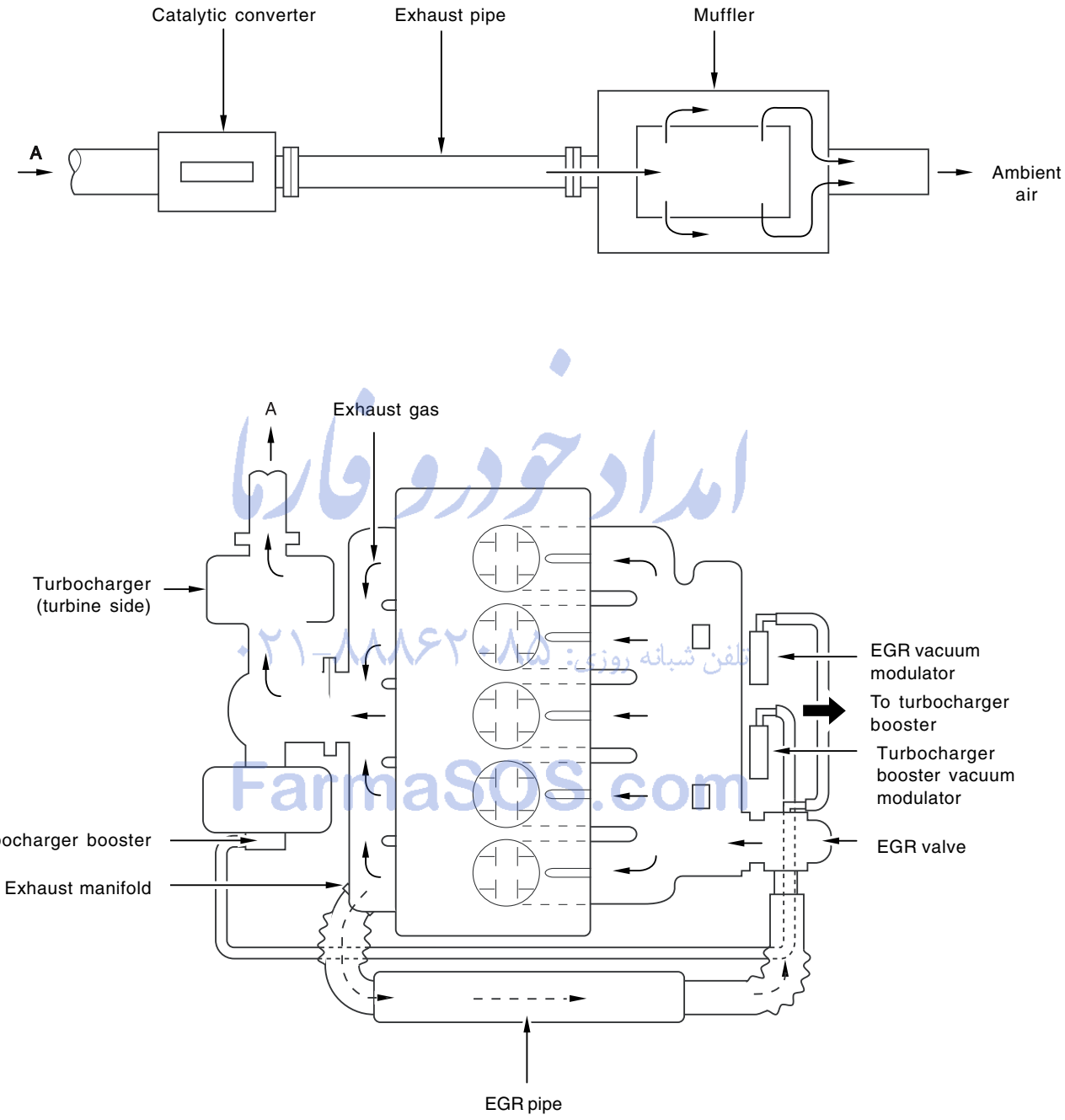

امداد خودرو فارها
تلفن شبانه روزی: ۰۲۱-۸۸۸۶۲۰۸۵
FarmaSOS.com

CHANGED BY	
EFFECTIVE DATE	
AFFECTED VIN	

LUBRICATION SYSTEM

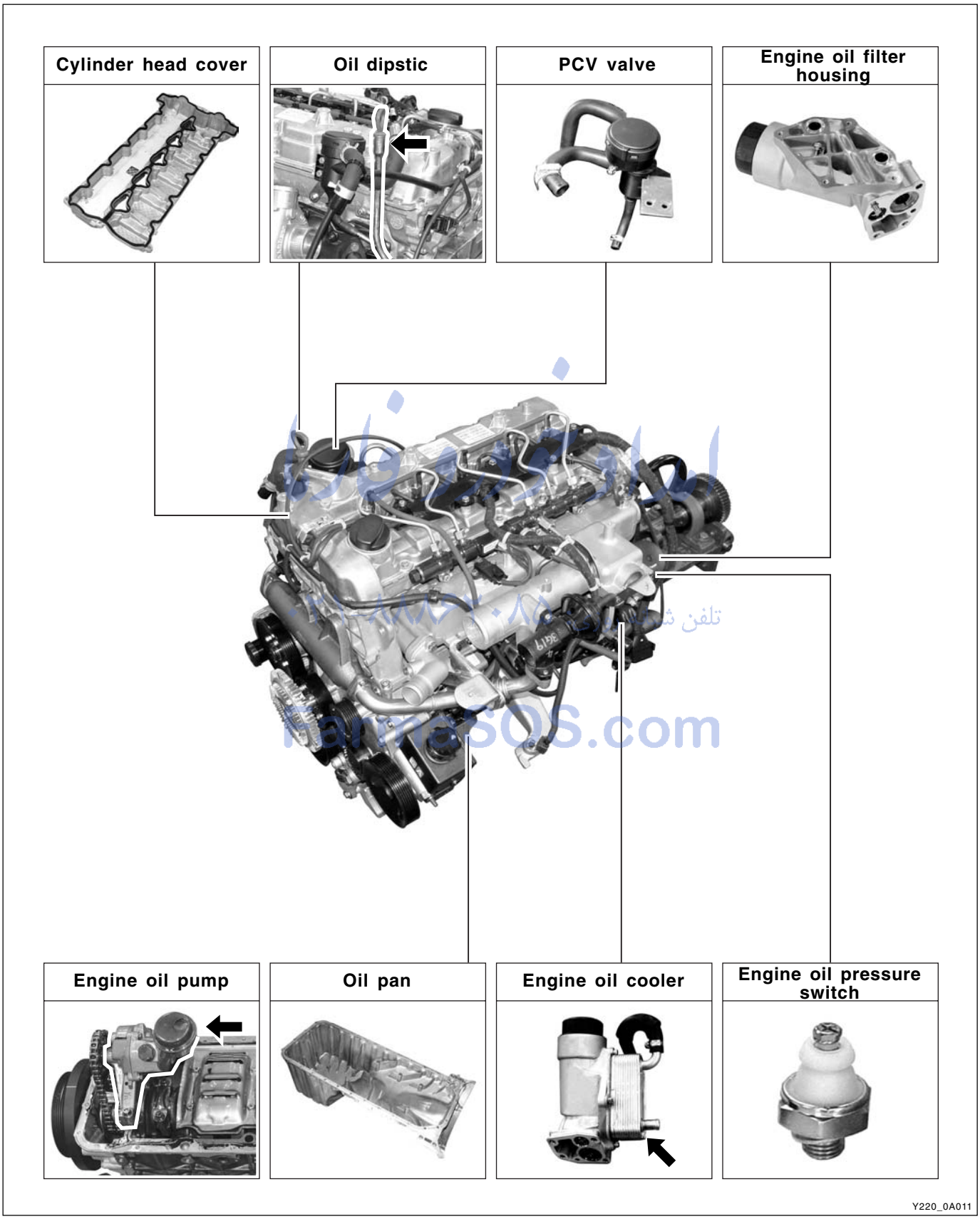

www.ASOS.com

CHANGED BY	
EFFECTIVE DATE	
AFFECTED VIN	

COOLING SYSTEM

Coolant reservoir



Water pump



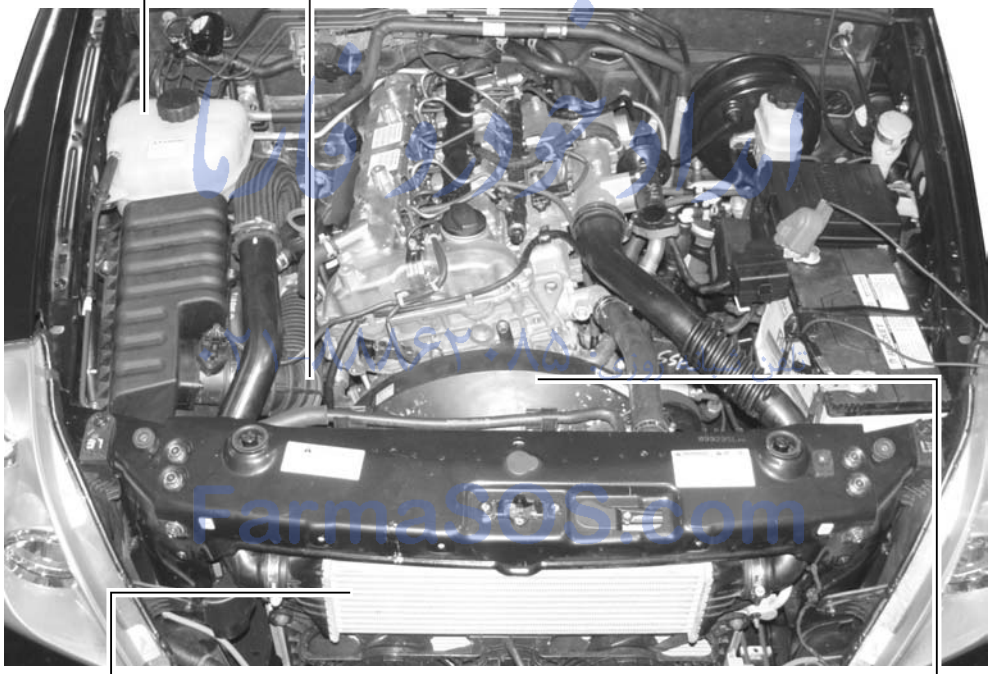

Radiator assembly



Cooling fan and fan clutch



Y220_0A013

CHANGED BY	
EFFECTIVE DATE	
AFFECTED VIN	

COOLANT FLOW CHART

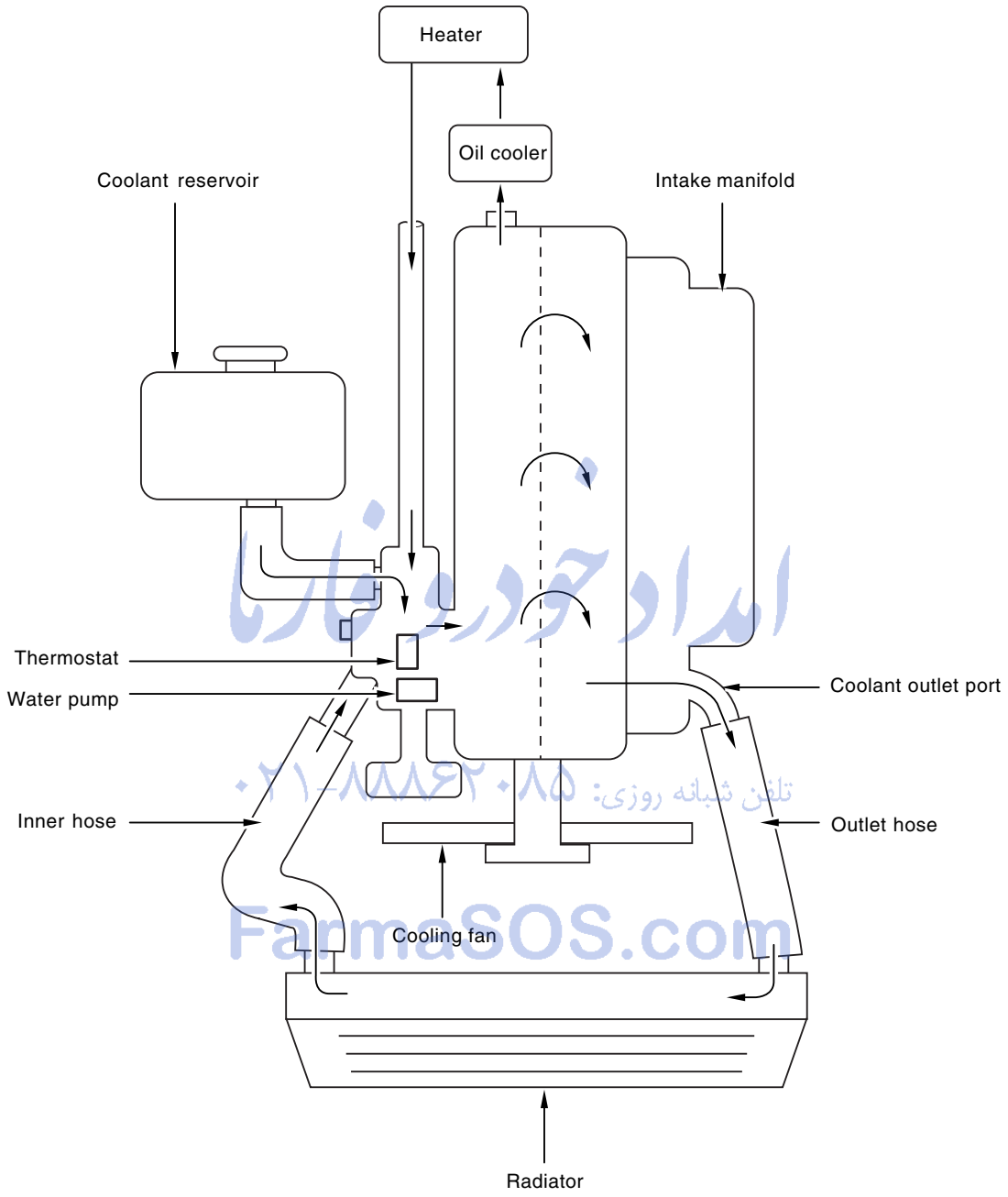

امداد خودرو فارما
تلفن شبانه روزی: ۰۲۱-۸۸۸۶۲۰۸۵
FarmaSOS.com

FUEL SYSTEM

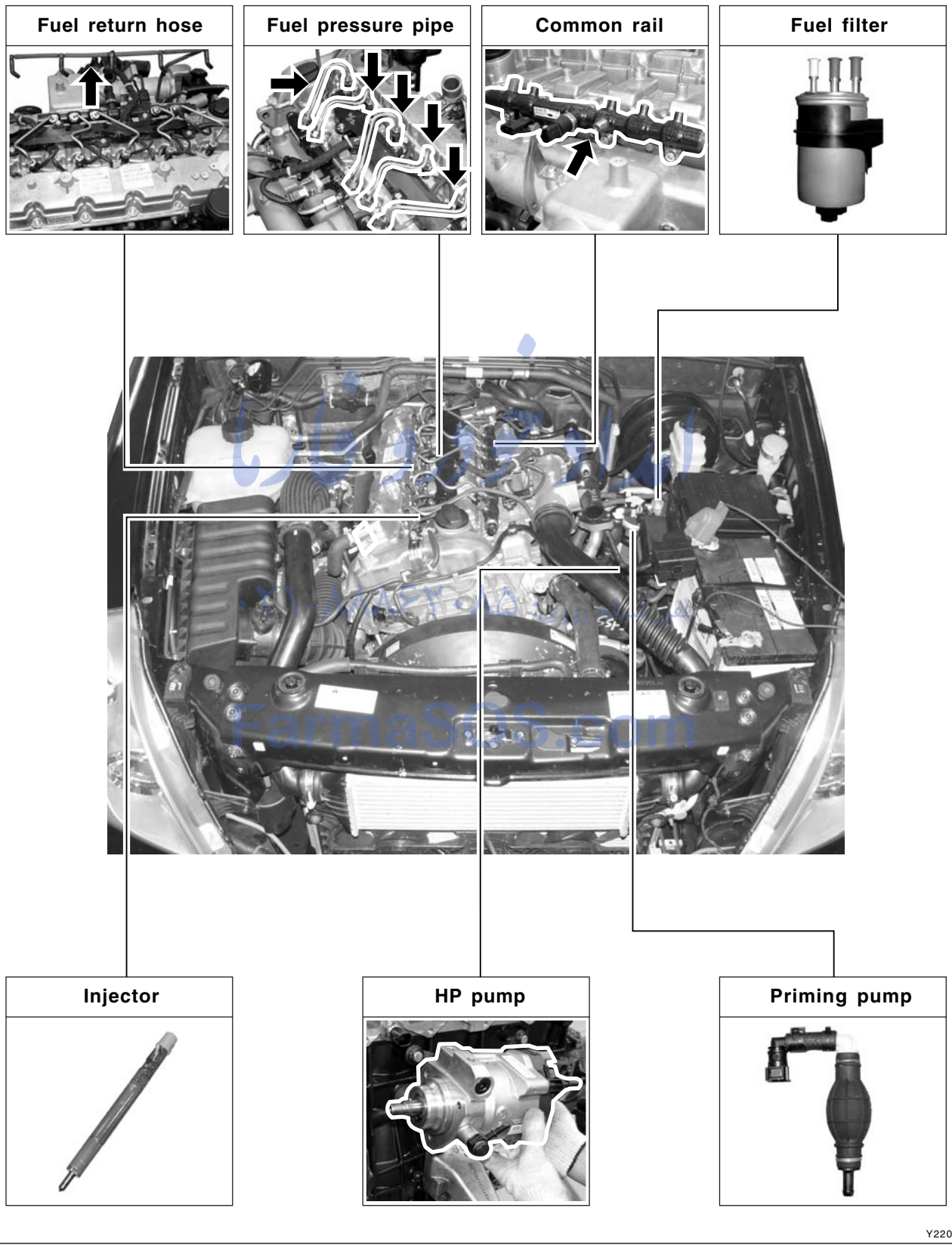

CHANGED BY	
EFFECTIVE DATE	
AFFECTED VIN	

FUEL SUPPLY SYSTEM

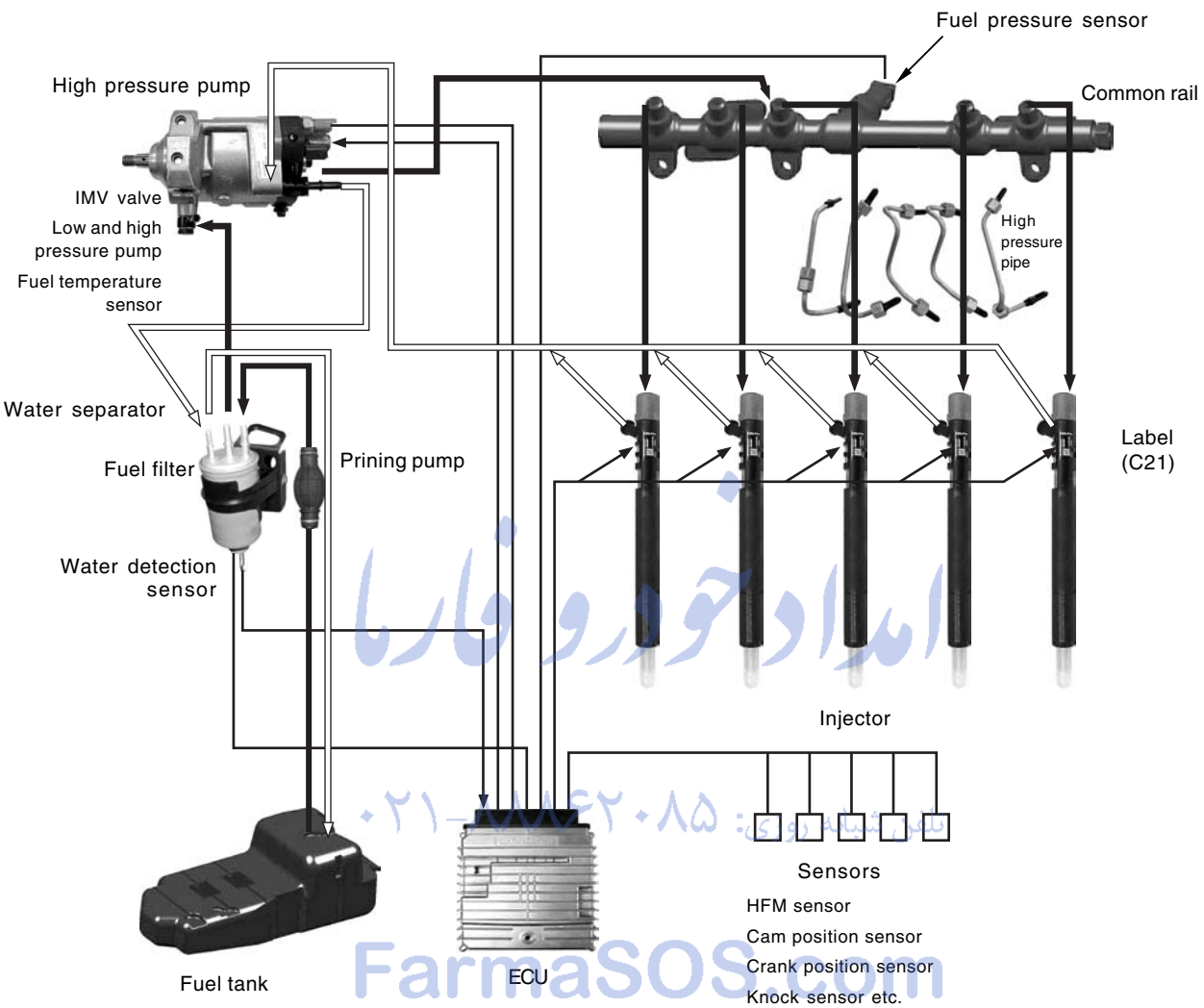

امداد خودرو فارما
۰۲۱-۴۴۷۲۰۸۵
FarmaSOS.com

According to input signals from various sensors, engine ECU calculates driver's demand (position of the accelerator pedal) and then controls overall operating performance of engine and vehicle on that time.

ECU receives signals from sensors via data line and then performs effective engine air-fuel ratio controls based on those signals. Engine speed is measured by crankshaft speed (position) sensor and camshaft speed (position) sensor determines injection order and ECU detects driver's pedal position (driver's demand) through electrical signal that is generated by variable resistance changes in accelerator pedal sensor. Air flow (hot film) sensor detects intake air volume and sends the signals to ECU. Especially, the engine ECU controls the air-fuel ratio by recognizing instant air volume changes from air flow sensor to decrease the emissions (EGR valve control). Furthermore, ECU uses signals from coolant temperature sensor and air temperature sensor, booster pressure sensor and barometric sensor as compensation signal to respond to injection starting, pilot injection set values, various operations and variables.

GENERAL SPECIFICATIONS

VEHICLE SPECIFICATIONS

▶ Vehicle Dimension

(mm)

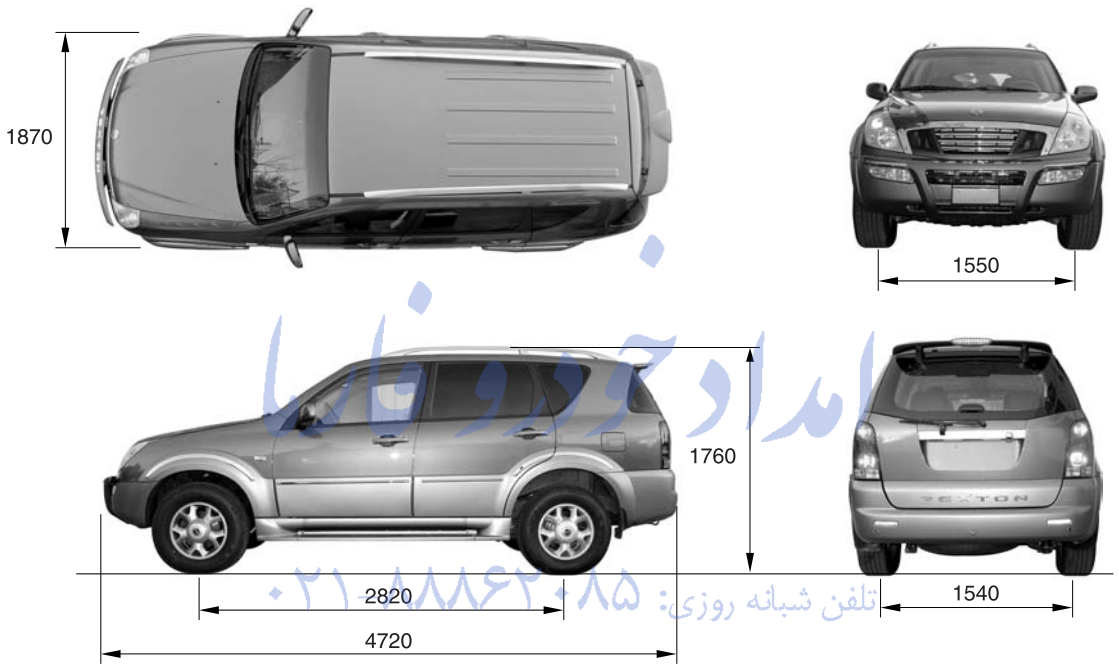

امداد خودرو فارما
تلفن شبانه روزی: ۰۲۱-۸۸۶۲۰۹۸۵
FarmaSOS.com

Y220_0A017

CHANGED BY	
EFFECTIVE DATE	
AFFECTED VIN	

▶ Specifications

Systems	Items		Diesel			Remark
General	Overall length (mm)		4,720 (4,785)			( ): optional item
	Overall width (mm)		1,870			
	Overall height (mm)		1,760 (1,830)			
	Gross vehicle weight (kg)		AT: 2450 (2510), MT: 2405 (2465)			
	Curb weight (kg)		AT: 1995 (2055), MT: 1950 (2010)			
	Min. turning radius (m)		5.6			
	Ground clearance (mm)		200			
	Fuel		Diesel			
	Fuel tank capacity		80 ℓ			
Engine	Model		D27DT			
	No. of cyl./Compression ratio		5/18:1			
	Total displacement		2,696 cc			
	Camshaft arrangement		DOHC			
	Max. power		170 ps/4,000 rpm			
	Max. torque		34.7 kg•m/1,800 rpm			
	Injection timing		ATDC 4° ± 1°(at idle)			
	Idle speed		760 ± 50 rpm			
	Cooling system		Water-cooled/forced circulation			
	Coolant capacity		Approx. 11.5 ℓ			
	Lubrication		Gear pump, forced circulation			
	Max. oil capacity		9.3 ℓ			
	Turbo charger and cooling type		Turbo charger, air-cooled			
Manual transmission	Type		Remote control, floor change type			
		1st	IDI Engine 4.007	DI Engine 4.315		
		2nd	2.367	2.475		
		3rd	1.473	1.536		
		4th	1.000	1.000		
		5th	0.872	0.807		
		Rev.	3.700	3.591		
Automatic transmission	Model		Electronic			
	Type		Floor change type			
		1st	2.742	3.595	2.742	
		2nd	1.508	2.186	1.508	
		3rd	1.000	1.405	1.000	
		4th	0.708	1.000	0.708	
		5th	-	0.831	-	
		Rev. 1st	2.429	3.162	2.429	
		Rev. 2nd	-	1.926	-	

FarmaSOS.com

CHANGED BY	
EFFECTIVE DATE	
AFFECTED VIN	

▶ Specifications (Cont'd)

Systems	Items		Diesel		Remark
Transfercase	Model		Part-time		( ): optional item
	Type		Planetary gear type		
	Gear ratio	High	1.000 : 1		
		Low	2.483 : 1		
Clutch	Type		Hydraulic [A/T: Torque converter]		
	Disc type		Dry single diaphragm type [A/T: 3 elements 1 stage 2 phases]		
Power steering	Type		Rack and pinion		
	Steering angle	Inner	36° 17′		
		Outer	32° 40′		
Front axle	Drive shaft type		Ball joint type		
	Axle housing type		Build-up type		
Rear axle	Drive shaft type		Semi-floating type		
	Axle housing type		Build-up type		
Brake	Master cylinder type		Tandem type		
	Booster type		Vacuum booster		
	Type	Inner	Disc		
		Outer	Drum (Disc)		
	Parking brake		Cable type (internal expansion)		
Suspension	Front		Wishbone + Coil spring		
	Rear		5-link + Coil spring		
Air conditioner	Refrigerant		R134a		
	Compressor type		Vane type		
Electrical	Battery type/Capacity (V-AH)		MF / 12 - 90		
	Starter capacity (V-kW)		Diesel : 12 - 2.2, Gasoline : 12 - 1.8		
	Alternator capacity (V-A)		IDI	12 - 75 (12 - 90)	
			DI	12 - 140 (12 - 115)	
			Gasoline	12 - 115	

امداد خودرو فارا
۰۲۱-۸۸۸۶۲۰۸۵ تلفن شبانه روزی
FarmaSOS.com

CHANGED BY	
EFFECTIVE DATE	
AFFECTED VIN	

MAINTENANCE

▶ Major Components and Service Interval

* Use only Ssangyong Genuine Parts.

Components		Daily	Weekly	Service Interval	Remarks
Engine oil and oil filter	Gasoline engine	O	-	Initial change: 10,000 km Replace at every 15,000 km	More frequent maintenance is required if the vehicle is operated under severe condition. **Severe conditions?** - Frequent low-speed operation as in stop-and-go traffic - When most trips are less than 6 km (in winter, less than 16 km) - Driving in sandy, dusty, and salty road - Driving in mountainous areas - Extensive idling or high load operation such as towing a trailer
	DI diesel engine	O	-	Initial change: 5,000 km Replace at every 10,000 km or 12 months	
	IDI diesel engine	O	-		
Coolant		O	-	Replace at every 60,000 km or 3 years	
Brake pipe and hose		-	-	Initial inspection: 1,000 km Inspect at every 20,000 km, replace if necessary	
Brake pad, shoe and disc		-	-	Inspect at every 10,000 km, check or adjust if necessary	
Air cleaner element	Gasoline engine	-	O	Clean at every 15,000 km, Replace at every 60,000 km	If vehicle is operated under dusty or sandy area, frequently clean and inspect the air cleaner system. If necessary, replace the air cleaner element.
	DI diesel engine	-	O	Initial clean: 5,000 km, Clean at every 10,000 km, replace if necessary, Replace at every 30,000 km	
	IDI diesel engine	-	O		
Fuel filter	Gasoline engine	-	-	Replace at every 60,000 km	
	DI diesel engine	-	-	Replace at every 30,000 km (Drain the water from fuel filter at every 10,000 km)	
	IDI diesel engine	-	-	Replace at every 40,000 km	
Auto-matic transmis-sion oil	4-speed	-	-	Inspect at every 30,000 km or 1 year, replace if necessary (replace at every 60,000 km if the vehicle is operated under severe conditions)	More frequent maintenance is required if the vehicle is operated under severe condition. - Driving in unpaved road - Towing a trailer
	5-speed	-	-		
Manual transmission oil		-	-	Inspect at every 10,000 km, Replace at every 60,000 km	
Transfer case oil		-	-	Inspect at every 10,000 km, Replace at every 60,000 km (but, frequently chexk the leaks)	
Axle oil		-	-	Replace at every 30,000 km	
Air conditioner air filter		-	-	Replace at every 10,000 km	More frequent maintenance is required if the vehicle is operated under severe condition. - Driving in sandy, dusty, and unpaved road - Excessive operation of air conditioner or heater
Spark plug (gasoline engine)		-	-	Replace at every 60,000 km	

FarmaSOS.com

CHANGED BY	
EFFECTIVE DATE	
AFFECTED VIN	

▶ Lubrication Chart

Lubricant		Capacity		Classification	
Engine oil	Diesel	IDI Engine	6.0 ~ 8.0 L	Quality class**	API : CG grade or above, ACEA : B2, B3 or B4 MB sheet : 229.1/3 (preferable)
		DI Engine	6.8 ~ 8.3 L		
				Viscosity	MB sheet No. 224.1
	Gasoline	G23D	5.5 ~ 7.5 L	Quality class**	API : SJ grade or above, ACEA : A2 or A3 MB sheet : 229.1/3 (preferable)
		G32D/G28D	7.0 ~ 9.0 L		
				Viscosity	MB sheet No. 224.1
Engine coolant (Antifreeze and soft water mixed)		IDI Engine	10.5 ~ 11.0 L	MB sheet 325.0	
		DI Engine	11.0 ~ 12.0 L		
		G23D	10.0 ~ 10.5 L	BASF GLYSANTIN G05-11,	
		G32D/G28D	11.3 ~ 11.5 L	HOECHST GENANTIN SUPER 8023/14	
Manual transmission oil		4WD: 3.6 L, 2WD: 3.4 L		ATF DEXRON® II, III, ATF S-2, S-3, S-4, TOTAL FLUID ATX	
Brake/Clutch fluid (Level must be maintained between MAX & MIN level)		Properly		SAE J 1703, DOT 3 or DOT 4	
Power steering fluid		1.1 L		ATF DEXRON® II, III	
Automatic transmission fluid		4-speed: 9.5 L		CASTROL TQ 95	
		5-speed: 8.0 L		SHELL or FUCHS ATF 3353	
Transfer case fluid	IDI Engine	Part time	1.2 ~ 1.4 L	ATF DEXRON® II, III,	
	DI Engine	Part time	1.4 ~ 1.5 L		
		Full time(TOD)	1.4 ~ 1.5 L	ATF S-4, TOTAL FLUID ATX	
	Gasoline	Full time(TOD)	1.4 ~ 1.5 L		
Axle fluid	Front	1.4 ~ 1.5 L		SAE 80W/90, API GL-5	
	Rear	2.2 L			
Wheel bearing grease		Properly		SHELL Retinax “A” grade	
Propeller shaft grease - Front/Rear		Properly		ALVANIA EP#2	

* Please contact Ssangyong Dealer for approved alternative fluid.

** In only case not available MB 229.1 or 229.3, API or ACEA oil may be accepted, however it would rather recommend to shorten the change interval around 30%.

IDI: Indirect Injection

DI: Direct Injection

امداد خودرو فارا
۰۲۱-۸۸۸۲۰۸۵۵ تلفن شبانه روزی
FaraSOS.com

VEHICLE IDENTIFICATION

1. Vehicle identification Number

Vehicle identification number (VIN) is is on the right front axle upper frame.



[KPTPOA19S1P 122357]

K .. Nation	(K: Korea)
P .. Maker Identification	(P: Ssangyong Motor Company)
T .. Vehicle Type	(T: Passenger car - 4WD)
P .. Line Models	(P: Rexton)
O . Body Type	(O: 5-door)
A .. Trim Level	(A: Standard, B: Deluxe, C: Super deluxe)
1 .. Restraint System	(0: No seatbelts, 1: 3-point seatbelts, 2: 2-point seatbelt)
9 .. Engine Type	(9: 3199cc, In-line 6 cylinders, Gasoline E32) (D: 2874cc, II-line 5 cylinders, Diesel)
S .. Check Digit	(S: All area except North America)
1 .. Model Year	(1: 2001, 2: 2002, 3: 2003)
P .. Plant Code	(P: Pyungtaek plant)
122357	(Production serial number)

امداد خودرو فارما
تلفن شبانه روزی: ۰۲۱-۸۸۸۶۲۰۸۵
FarmaSOS.com

2. Certification Label

The certification label is affixed on the bottom of driver's side B-pillar.



3. Engine Serial Number

The engine serial number is stamped on the lower area of cylinder block in exhaust manifold side.

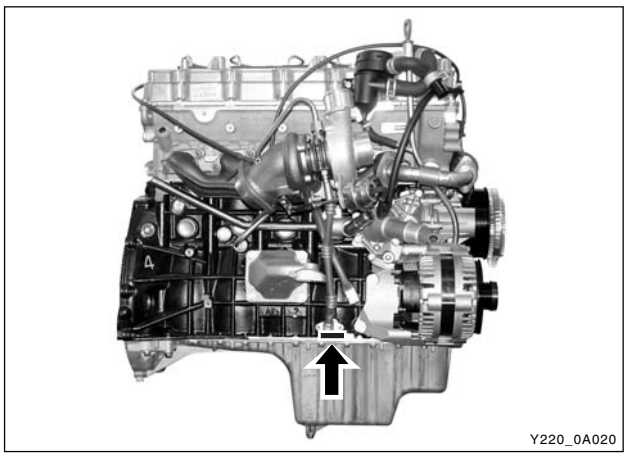

4. Manual Transmission Number

The transmission label is affixed on the upper area of clutch housing.

امداد خودرو فارما
۰۲۱-۸۸۸۶۲۰۸۵ تلفن خط آزادی
FarmaSOS.com

5. Automatic Transmission Number

The transmisson label is affixed on the right area of transmission housing.

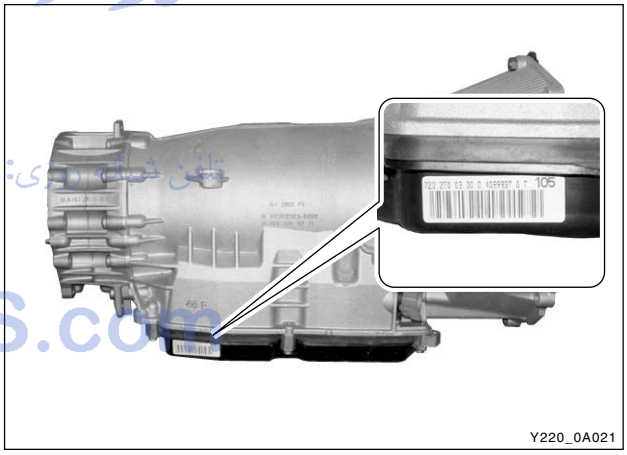

6. Transfer Case Number

The transfer case label is affixed on the transfer case housing.

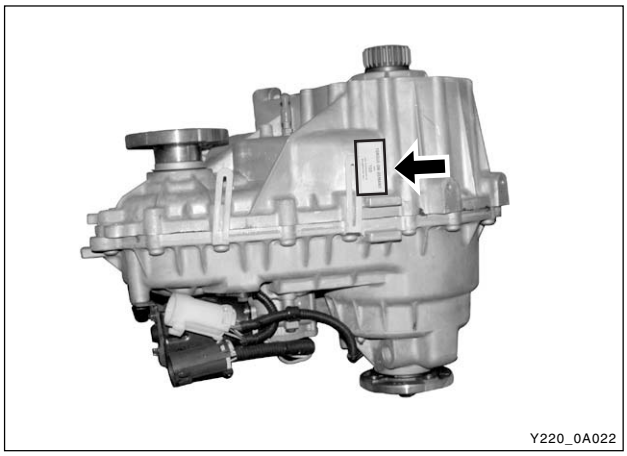

CHANGED BY	
EFFECTIVE DATE	
AFFECTED VIN	

HOW TO USE AND MAINTAIN WORKSHOP MANUAL

CONSISTS OF WORKSHOP MANUAL

1. Group: The manual is divided in large group like engine, transmission, axle and others and this group is also divided in small group by vehicle state.
2. Small group: Each small group consists of general, vehicle service, unit repair and special tool usage.

MANUAL DESCRIPTION

- The contents of the manual consist of operational principle of system, specifications, diagnosis, removal/installation on vehicle, inspections, disassembly/assembly of removed assembly, special tool usage. Not providing simple removal/installation information but focused on to describe much more functions, roles and principles of system.
- Every automotive term like part name on the manual is the same in parts catalog, technical bulletin and drawings to avoid confusion among them.

▶ Consists of Small Group

1. **Contents:** In small group, included subjects and detailed subjects are described in.
2. **General:** In the general, summary of the small group (assembly), function and operational principle, specifications, structure and components, diagnosis and circuit diagram are described in.
3. **Vehicle service:** Service works on the vehicle like replacement of parts and inspection repairs are described in the order of repair works with actual photos and illustrations. Also cautions in service works, references and inspection methods after completion of service are described in.
4. **Disassembly and assembly of unit assembly:** Detailed service works like disassembly, inspection, adjustment and assembly on removed component (assembly) are described in with systematic contents and photo illustration.

FarmaSOS.com

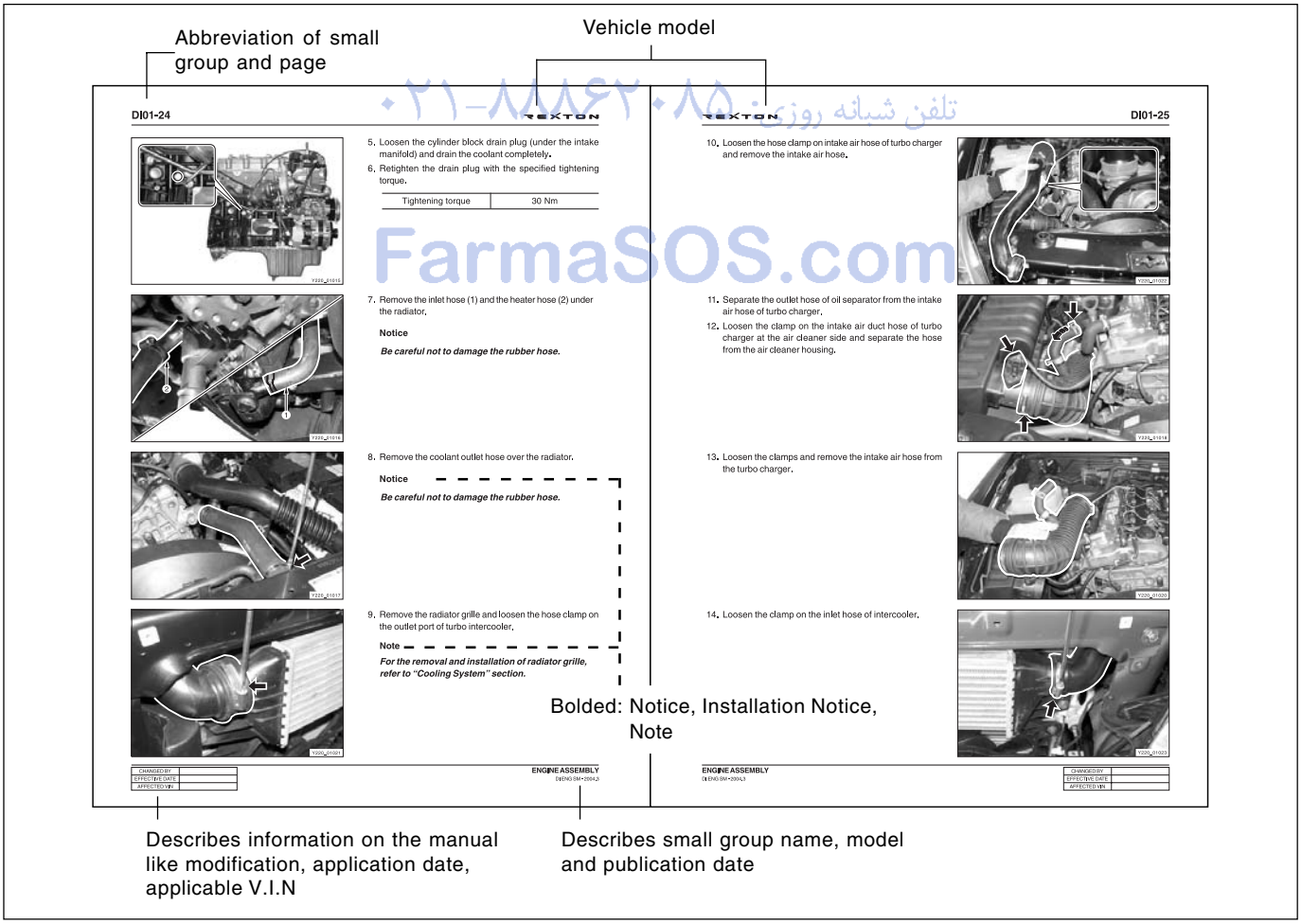

CHANGED BY	
EFFECTIVE DATE	
AFFECTED VIN	

GUIDELINES FOR SERVICE WORK SAFETY

▶ General

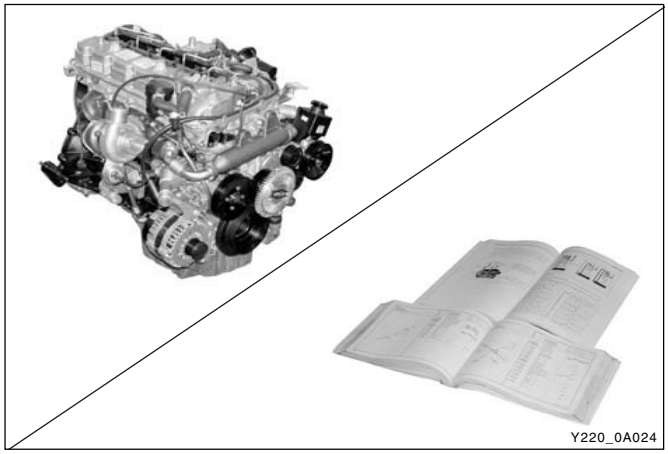

To maintain and operate the vehicle under optimum state by performing safe service works, the service works should be done by following correct methods and procedures.

Accordingly, the purpose of this manual is to prevent differences that can be caused by personal working method, skill, ways and service procedures and to allow prompt/correct service works.

Note, Notice

While using this manual, there are a lot of Note or Notice having below meaning.

Note

Note means detailed description of supplementary information on work procedure or skill.

Notice

Notice means precautions on tool/device or part damages or personal injuries that can occur during service works.

However, above references and cautions cannot be inclusive measures, so should have habits of taking concerns and cautions based on common senses.

▶ Cautions on Inspection/Service

Notice

During service works, be sure to observe below general items for your safety.

- ***For service works, be sure to disconnect battery negative (-) terminal if not starting and inspection.***
- ***While inspecting vehicle and replacing various consumable parts, be sure to take caution not to damage vehicle and injure people.***
- ***Engine and transmission may be hot enough to burn you. So inspect related locations when they cooled down enough.***
- ***If engine is running, keep your clothing, tools, hair and hands away from moving parts.***
- ***Even when the ignition key is turned off and positioned to LOCK, electrical fan can be operated while working on near around electrical fan or radiator grille if air conditioner or coolant temperature rises.***
- ***Every oil can cause skin trouble. Immediately wash out with soap if contacted.***
- ***Painted surface of the body can be damaged if spilled over with oil or anti-freeze.***
- ***Never go under vehicle if supported only with jack.***
- ***Never near the battery and fuel related system to flames that can cause fire like cigarette.***
- ***Never disconnect or connect battery terminal or other electrical equipment if ignition key is turned on.***
- ***While connecting the battery terminals, be cautious of polarities (+, –) not to be confused.***
- ***There are high voltage and currency on the battery and vehicle wires. So there can be fire if short-circuited.***
- ***Do not park while running the engine in an enclosed area like garage. There can be toxication with CO, so make sufficient ventilation.***
- ***The electrical fan works electrically. So the fan can be operated unexpectedly during working causing injuries if the ignition key is not in LOCK position. Be sure to check whether ignition key is in LOCK position before work.***
- ***Be careful not to touch hot components like catalytic converter, muffler and exhaust pipe when the engine is running or just stopped. They may burn you badly.***

FarmaSOS.com

CHANGED BY	
EFFECTIVE DATE	
AFFECTED VIN	

▶ Guidelines on Engine Service

To prevent personal injuries and vehicle damages that can be caused by mistakes during engine and unit inspection/ repair and to secure optimum engine performance and safety after service works, basic cautions and service work guidelines that can be easily forgotten during engine service works are described in.

Cautions before service works

- Before work on engine and each electrical equipment, be sure to disconnect battery negative (-) terminal.
- Before service works, be sure to prepare the works by cleaning and aligning work areas.
- Always position the ignition switch to OFF if not required. If not, there can be electrical equipment damages or personal injuries due to short-circuit or ground by mistake.
- There should be no leak from fuel injection system (HP pump, fuel hose, high pressure pipe) of the D27DT engine. So they should be protected from foreign materials.
- While removing the engine, do not position the jack and others under the oil pan or engine. To secure the safety, use only safety hook on the engine.

Engine and accessories

Engine has a lot of precise portions so tightening torque should be correct during disassembly/assembly and removal/installation and service work should be done in clean ways during disassembly/assembly.

Maintaining working area clean and cautious service administration is essential element of service works while working on the engine and each section of the vehicle. So the mechanics should well aware of it.

- While removing the engine, related parts (bolts, gaskets, etc.) should be aligned as a group.
- While disassembling/assembling internal components of the engine, well aware of disassembly/assembly section in this manual and clean each component with engine oil and then coat with oil before installation.
- While removing engine, drain engine oil, coolant and fuel in fuel system to prevent leakage.
- During service work of removal/installation, be sure to check each connected portions to engine not to make interference.

Fuel and lubrication system

Painted surface of the body can be damaged or rubber products (hoes) can be corroded if engine oil and fuel are spilled over. If spilled over engine, foreign materials in air can be accumulated on the engine damaging fuel system.

- If work on the fluid system such as fuel and oil, working area should be well ventilated and mechanic should not smoke.
- Gasket or seal on the fuel/lubrication system should be replaced with new and bolts and nuts should be tightened as specified.
- After removal/installation works, be sure to check whether there is leak on the connecting section.

If fine dust or foreign material enters into DI engine's fuel system, there can be serious damages between HP pump and injectors. So, be sure to cover removed fuel system components with cap and protect removed parts not to be contaminated with dirt. (Refer to cleanness in this manual while working on DI engine fuel system)

Electrical equipment

Electrical equipment should be handled more carefully. Currently, the engine is equipped with a lot of electrical equipments so there can be engine performance drops, incomplete combustion and other abnormals due to short and poor contact. Mechanics should well aware of vehicle's electrical equipment.

- If have to work on the electrical equipment, be sure to disconnect battery negative (-) terminal and position the ignition switch to off if not required.
- When replacing electrical equipment, use the same genuine part and be sure to check whether ground or connecting portions are correctly connected during installation. If ground or connecting portion is loosened, there can be vehicle fire or personal injury.

امداد خودرو فارما
FarmaSO6.com

During Service Work - Inspection

1. Before lifting up the vehicle with lift, correctly support the lifting points and lift up.
2. When using a jack, park the vehicle on the level ground and block front and rear wheels. Position the jack under the frame and lift up the vehicle and then support with chassis stand before service work.



3. Before service work, be sure to disconnect battery negative (-) terminal to prevent damages by bad wire and short.

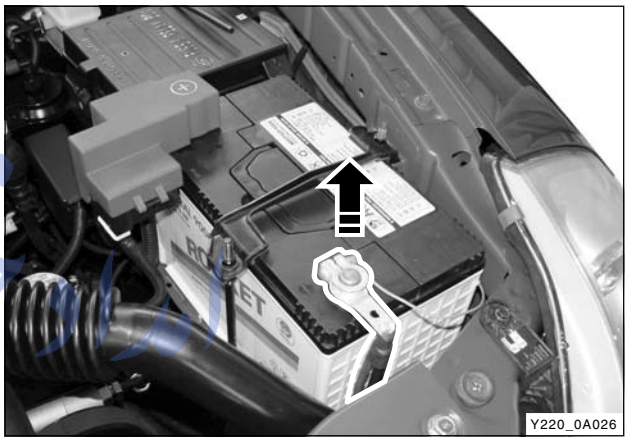

4. If service from interior of the vehicle, use protection cover to prevent damage and contamination of seat and floor.
5. Brake fluid and anti-freeze can damage painted surface of body. So carefully handle them during service work.



6. Use recommended and specified tools to increase efficiency of service work.
7. Use only genuine spare parts.



FarmaSOS.com





8. Never reuse cotter pin, gasket, O-ring, oil seal, lock washer and self-locking nut. Replace them with new.

   If reused, normal functions cannot be maintained.
9. Align the disassembled parts in clean according to disassembling order and group for easy assembling.
10. According to installing positions, the bolts and nuts have different hardness and design. So be careful not to mix removed bolts and nuts each other and align them according installing positions.
11. To inspect and assemble, clean the parts.
12. Securely clean the parts that related with oil not to be affected by viscosity of oil.
13. Coat oil or grease on the driving and sliding surfaces before installing parts.
14. Use sealer or gasket to prevent leakage if necessary.
15. Damaged or not, never reuse removed gasket. Replace with new and cautious on installing directions.
16. Tighten every bolt and nut with specified torque.
17. When service work is completed, check finally whether the work is performed properly or the problem is solved.
18. If work on the fuel line between priming pump and injector (including return line), be sure to cover the removed parts with cap and be careful not to expose the connecting passage and removed parts to external foreign materials or dust. (Refer to cleanness.)
19. If remove high pressure fuel supply pipe between HP pump and fuel rail and high pressure fuel pipe between fuel rail and each injector, be sure to replace them with new.

FarmaSOS.com

During Service Work for Electric Devices



Notice

Be careful not to modify or alter electrical system and electrical device. Or there can be vehicle fire or serious damage.

1. Be sure to disconnect battery negative (-) terminal during every service work. Before disconnecting battery negative (-) terminal, turn off ignition key.
2. Replace with specified capacity of fuse if there is bad, blown or short circuited fuse. If use electrical wire or steel wire other than fuse, there can be damages on the various electrical systems. If replaced with over-capacity fuse, there can be damages on the related electrical device and fire.
3. Every wire on the vehicle should be fastened securely not to be loosened with fixing clip.
4. If wires go through edges, protect them with tape or other materials not to be damaged.

امداد خودرو فارما

5. Carefully install the wires not to be damaged during installation/removal of parts due to interference.
6. Be careful not to throw or drop each sensor or relay.
7. Securely connect each connector until hear a “click” sound.

۰۲۱-۸۸۳۶۰۸۵
FarmaSOS.com

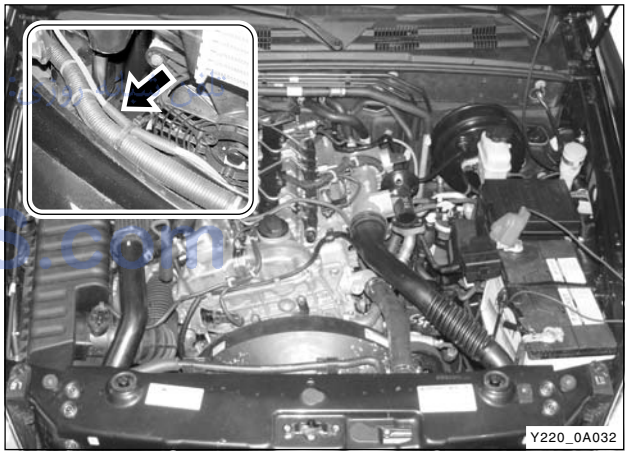

CHANGED BY	
EFFECTIVE DATE	
AFFECTED VIN	

LIFTING POINTS

▶ Lifting Positions

1. 4-post lift

As illustrated, position the vehicle on the 4-post lift securely and block the front and rear of each tire not to move during working.

Notice

During lifting, be sure to check whether vehicle is empty.

- ***Board-on lift connection device installed in front of vehicle should be positioned in front of sill locating under the front door.***
- ***Install lift connecting device on the edge of front and rear of board-on lift.***

Warning

- ***Be sure to use attachment during lifting to prevent the lift from contacting with body floor.***
- ***While lifting the vehicle, widen the lift floor as far as possible to stabilize between vehicle front and rear. When fixing the lift floor, be careful not to contact with brake tube and fuel lines.***

امداد خودرو فارما
تلفن شبانه روزی: ۰۲۱-۸۸۸۶۲۰۸۵
FarmaSOS.com

2. Safety jack and safety stand

If lift up the vehicle with safety jack and stand, should be more careful during works.



Warning

- ***Never be under the vehicle if supported with only jack. If have to be under the vehicle, be sure to use safety block.***
- ***Use wheel block in front and rear of every wheel.***

TIGHTENING TORQUE OF STANDARD BOLTS

▶Tightening Torque By Bolt Specification

Bolt Diameter	Pitch	Tightening Torque (kg·cm)					
		Standard Tightening Torque			Max. Allowable Tightening Torque		
		4T	7T	9T	4T	7T	9T
M3	0.5	5	9	13	7	12	17
M4	0.7	12	20	30	16	27	40
M5	0.8	24	40	57	32	53	77
M6	1.0	41	68	99	55	91	130
M8	1.25	88	160	230	130	210	310
M10	1.25	190	330	470	260	430	620
	1.5	190	310	450	250	420	600
M12	1.25	350	580	840	460	770	1,100
	1.75	330	550	790	440	730	1,000
M14	1.5	550	910	1,300	730	1,200	1,900
M16	1.5	830	1,100	2,000	1,100	1,900	2,700
M18	1.5	1,200	2,000	2,900	1,600	2,700	3,800
M20	1.5	1,700	2,800	4,000	2,200	3,700	5,300
M22	1.5	2,300	3,800	5,400	3,000	5,000	7,200
M24	1.5	2,900	4,900	7,000	3,900	6,500	9,400
	2.0	2,800	4,700	6,800	3,800	6,300	9,100

FarmaSOS.com

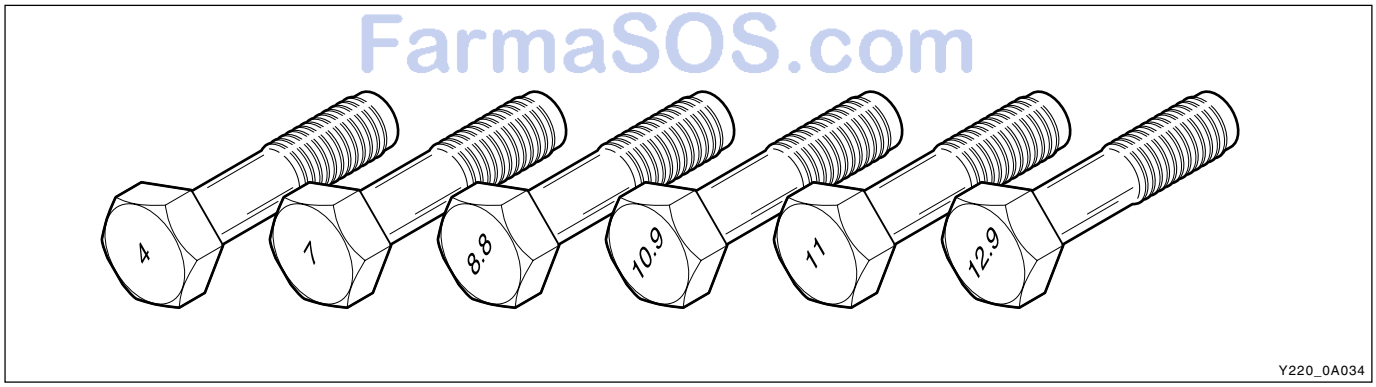

1. Metric bolt strength is embossed on the head of each bolt. The strength of bolt can be classified as 4T, 7T, 8.8T, 10.9T, 11T and 12.9T in general.
2. Observe standard tightening torque during bolt tightening works and can adjust torque to be proper within 15 % if necessary. Try not to over max. allowable tightening torque if not required to do so.
3. Determine extra proper tightening torque if tightens with washer or packing.
4. If tightens bolts on the below materials, be sure to determine the proper torque.
   - Aluminum alloy: Tighten to 80 % of above torque table.
   - Plastics: Tighten to 20 % of above torque table.

CHANGED BY	
EFFECTIVE DATE	
AFFECTED VIN	

MEMO

امداد خودرو فارما
تلفن شبانه روزی: ۰۲۱-۸۸۸۶۲۰۸۵
FarmaSOS.com

SECTION DI01

ENGINE ASSEMBLY

امداد خودرو فارما

تلفن شبانه روزی: ۰۲۱-۸۸۸۶۲۰۸۵

FarmaSOS.com

SECTION DI01

ENGINE ASSEMBLY

Table of Contents

STRUCTURE AND FUNCTION DESCRIPTIONS DI01-3

D27DT engine DI01-3

Engine performance curve DI01-8

General diagnosis DI01-10

DIAGNOSTIC INFORMATION AND PROCEDURE .. DI01-15

Oil leak diagnosis DI01-15

Compression pressure test DI01-16

Cylinder pressure leakage test DI01-18

Tightening torque DI01-19

REMOVAL AND INSTALLATION DI01-22

Engine mounting DI01-22

DISASSEMBLY AND REASSEMBLY DI01-32

Components and special tools DI01-32

ایران خودرو فارما

۰۲۱-۸۸۸۶۲۰۸۵ تلفن شبانه روزی

FarmaSOS.com

CHANGED BY	
EFFECTIVE DATE	
AFFECTED VIN	

امداد خودرو فارما

تلفن شبانه روزی: ۸۸۸۶۲۰۸۵-۰۲۱

FarmaSOS.com

STRUCTURE AND FUNCTION DESCRIPTIONS

D27DT ENGINE

▶ Major Components in Engine and Engine Compartment

The advanced electronically controlled D27DT engine that has high pressure fuel system has been introduced to this vehicle. It satisfies the strict emission regulation and provides improved output and maximum torque.

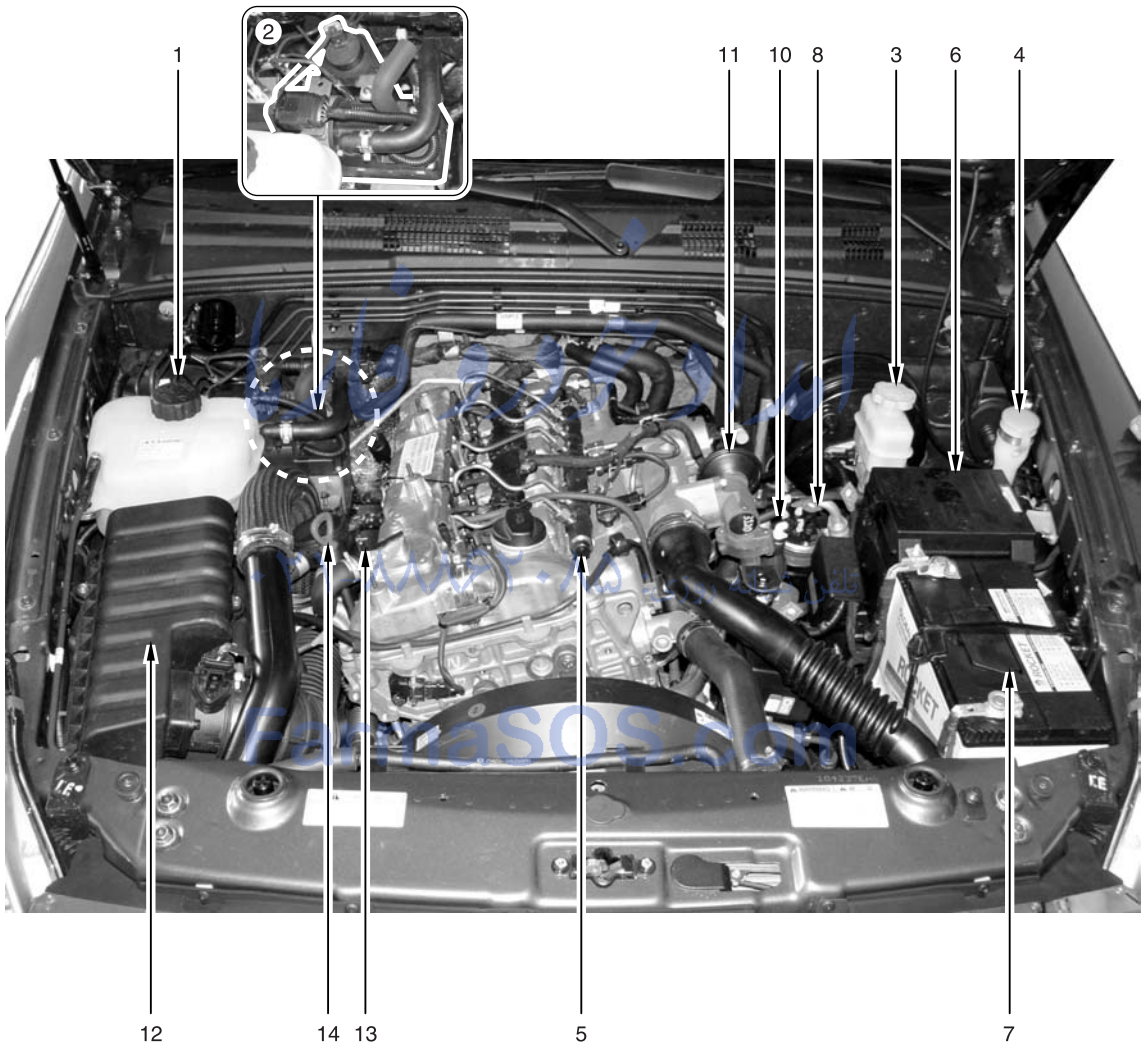

1. Coolant reservoir
2. FFH device
3. Brake fluid reservoir
4. Washer fluid reservoir
5. Common rail
6. Fuse box
7. Battery
8. Fuel filter
9. Power steering pump
10. Priming pump
11. EGR valve
12. Air cleaner assembly
13. Turbo charger
14. Oil dipstick

CHANGED BY	
EFFECTIVE DATE	
AFFECTED VIN	

▶ Engine Structure

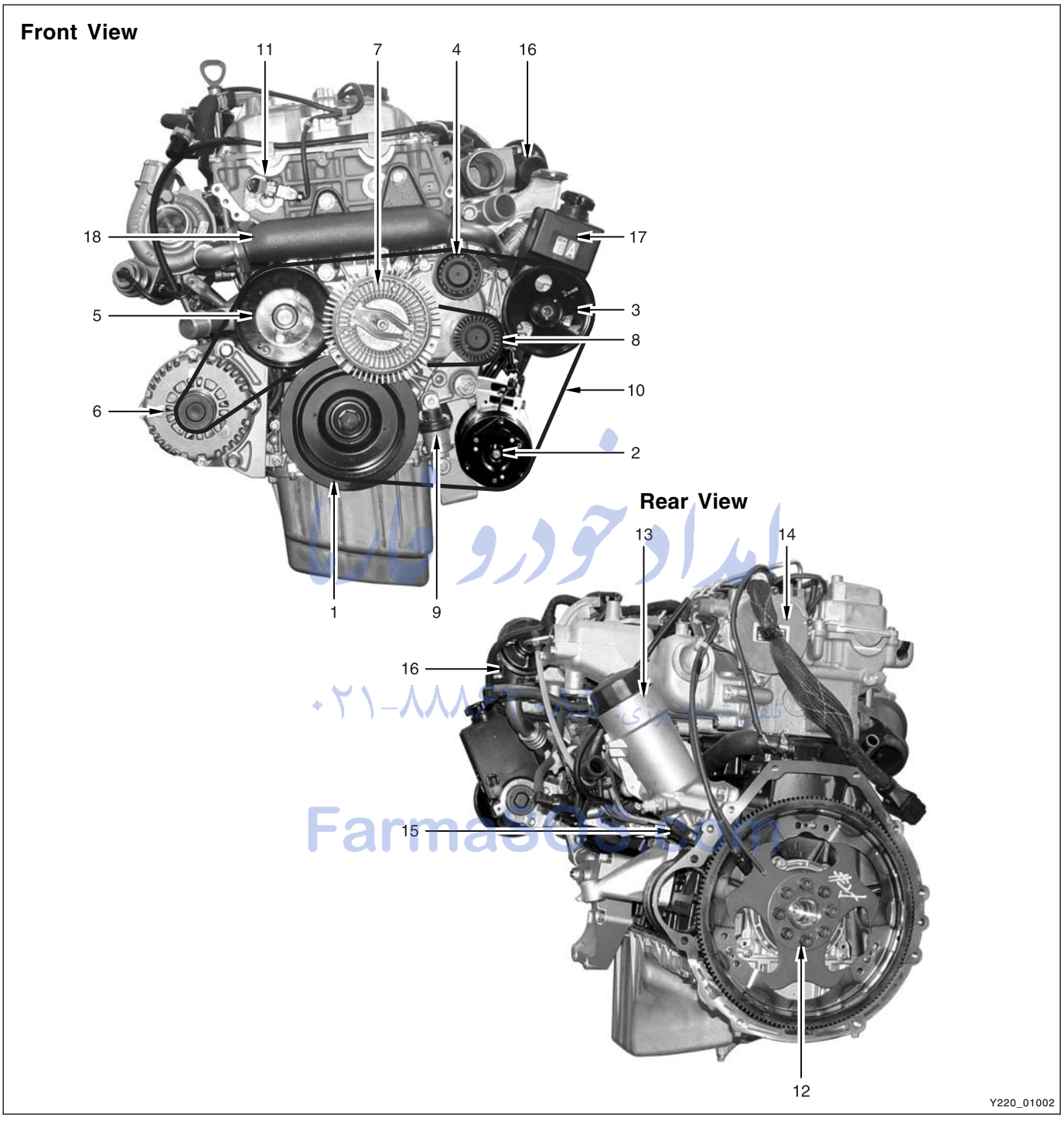

1. TVD (Torsional Vibration Damper)
2. Air conditioner compressor
3. Power steering pump pulley
4. Idle pulley
5. Coolant pump pulley
6. Alternator
7. Viscos fan clutch
8. Auto tensioner pulley
9. Auto tensioner
10. Poly-grooved belt
11. Cam position sensor
12. Drive plate (MT: DMF)
13. Oil filter
14. Vacuum pump
15. Crank position sensor
16. EGR valve
17. Power steering pump
18. EGR to center pipe

Top View

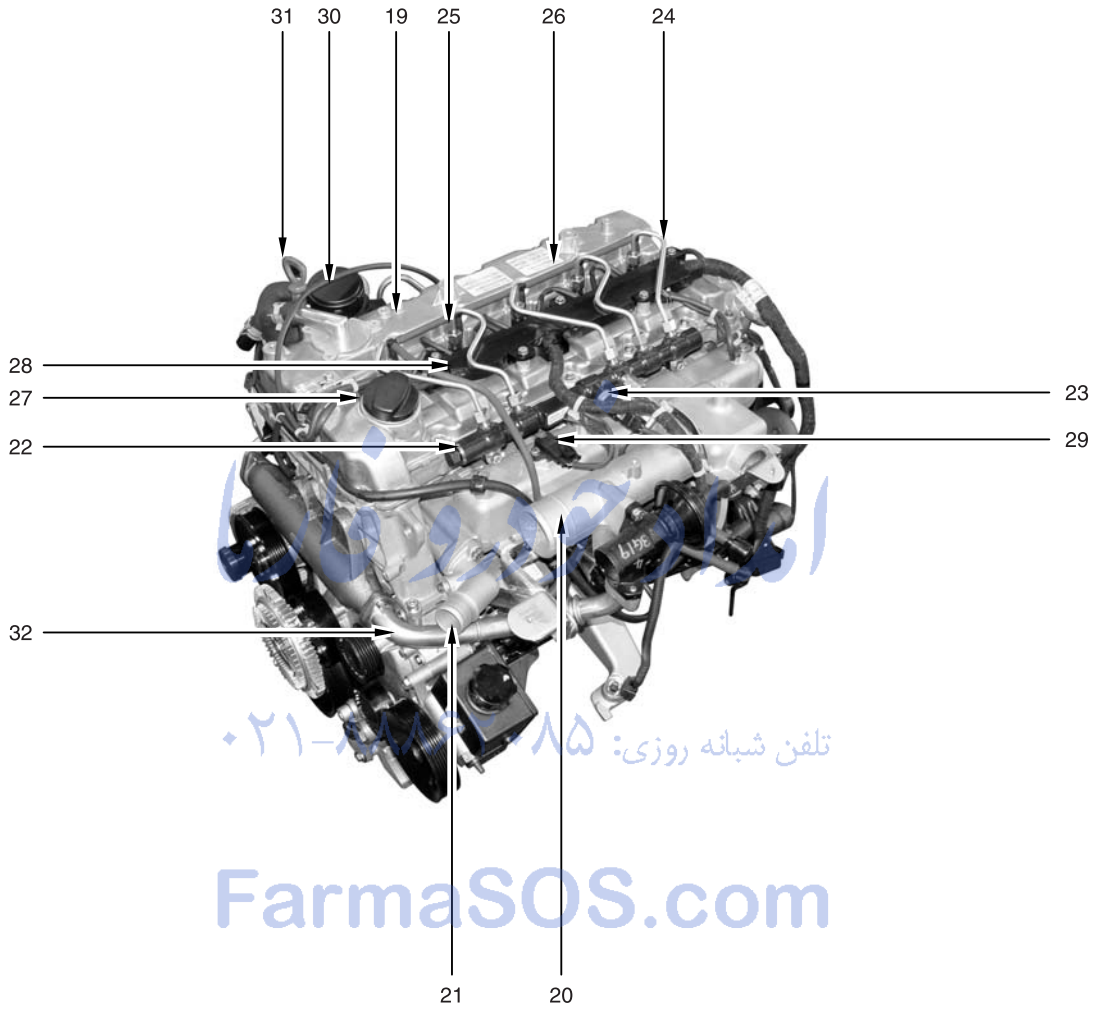

FarmaSOS.com
تلفن شبانه روزی: ۰۲۱-۸۸۸۳۰۸۵

19. Cylinder head cover
20. Intake manifold
21. Water outlet port
22. Common rail
23. Fuel pressure sensor
24. Fuel pipe
25. Injector
26. Fuel return line
27. Oil filler cap
28. Glow plug
29. Booster pressure sensor
30. PCV valve and oil separator
31. Oil dipstick
32. EGR-LH pipe

CHANGED BY	
EFFECTIVE DATE	
AFFECTED VIN	

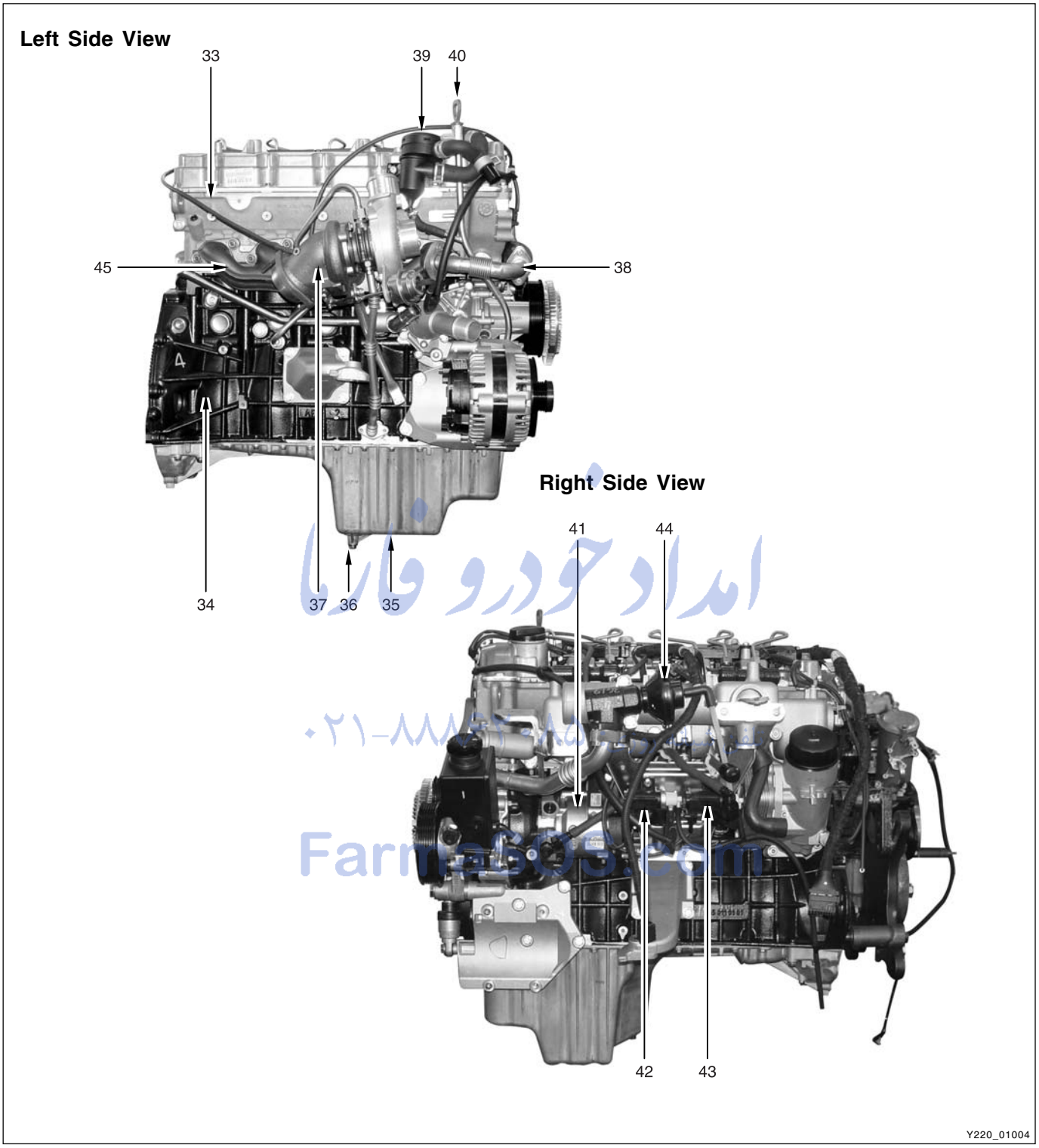

33. Cylinder head
34. Cylinder block
35. Oil pan
36. Drain plug
37. Turbo charger
38. EGR-RH pipe
39. PCV valve and oil separator
40. Oil dipstick
41. High pressure pump
42. Turbo charger booster vacuum modulator
43. EGR valve vacuum modulator
44. EGR valve
45. Exhaust manifold

CHANGED BY	
EFFECTIVE DATE	
AFFECTED VIN	

ENGINE ASSEMBLY
DI ENG SM - 2004.4

▶ Specifications

Description			Specification
Engine	Type/Number of cylinders		D27DT/5-cylinder
Cylinder	Inner diameter (mm)		86.2
	Stroke (mm)		92.4
Displacement (cc)			2696
Compression ratio			18:1
Maximum output (ps/rpm)			170/4,000
Maximum torque (kg·m/rpm)			34.7/1,800
Idle speed	For Manual Transmission		750 ± 50 rpm
	For Automatic Transmission		750 ± 50 rpm
Valve	Intake	Opens (BTDC)	16°
		Closes (ABDC)	33°
	Exhaust	Opens (BBDC)	46°
		Closes (ATDC)	21°
Camshaft	Type		DOHC
Fuel system	Fuel type		Low sulfur diesel
	Fuel pump type		Vane pump in HP pump
	Fuel supply pressure		HP pump inlet port: max. 400 mbar HP pump outlet port (with IMV fully open): over 1,050 bar
	Water separation in fuel filter		at every 10,000 km
	Fuel tank capacity (ℓ)		80
Lubrication system	Oil specification		SAE 10W40, 5W40 (MB Sheet 229.1, 229.3 approved oil)
	Lubrication type		Forced delivery
	Oil filter type		Full flow, filter element type
	Oil capacity (ℓ)		6.8 ~ 8.3
Cooling system	Cooling type		Water cooling type
	Cooling fan operation type		Belt operated typr
	Thermostat: Fully Open: 100°C)	Opening temperature (°C)	85
		Type	WAX pellet type
	Coolant capacity (ℓ)		˙. 11.5

امداد خودرو فارما
تلفن شبانه روزی: ۰۲۱-۸۸۸۶۲۰۸۵
FarmaSOS.com

CHANGED BY	
EFFECTIVE DATE	
AFFECTED VIN	

ENGINE PERFORMANCE CURVE

▶ Output and Torque

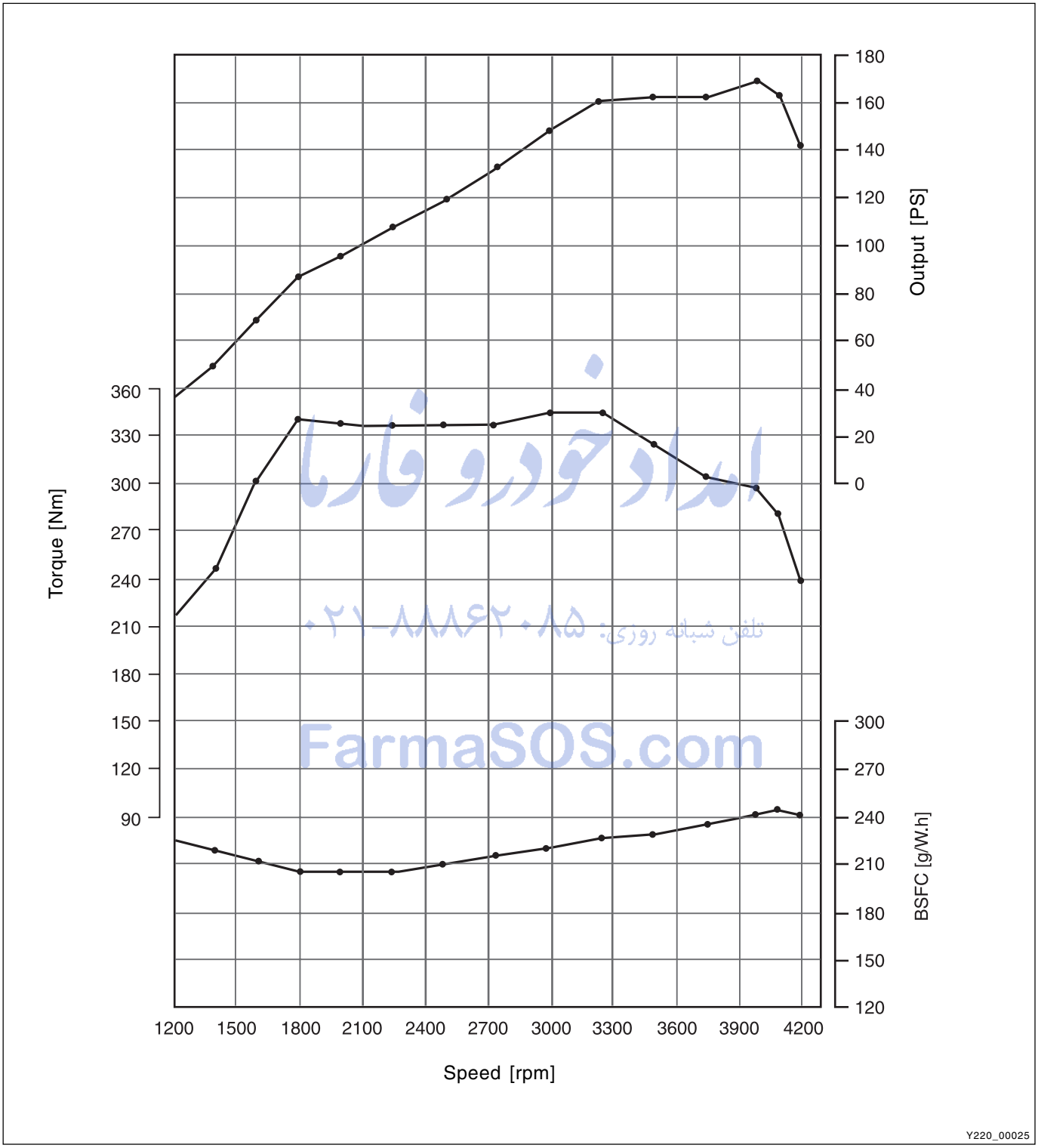

امداد خودرو فارما
تلفن شبانه روزی: ۰۲۱-۸۸۸۶۲۰۸۵
FarmaSOS.com

▶ Oil Temperature/Pressure and Boost Pressure

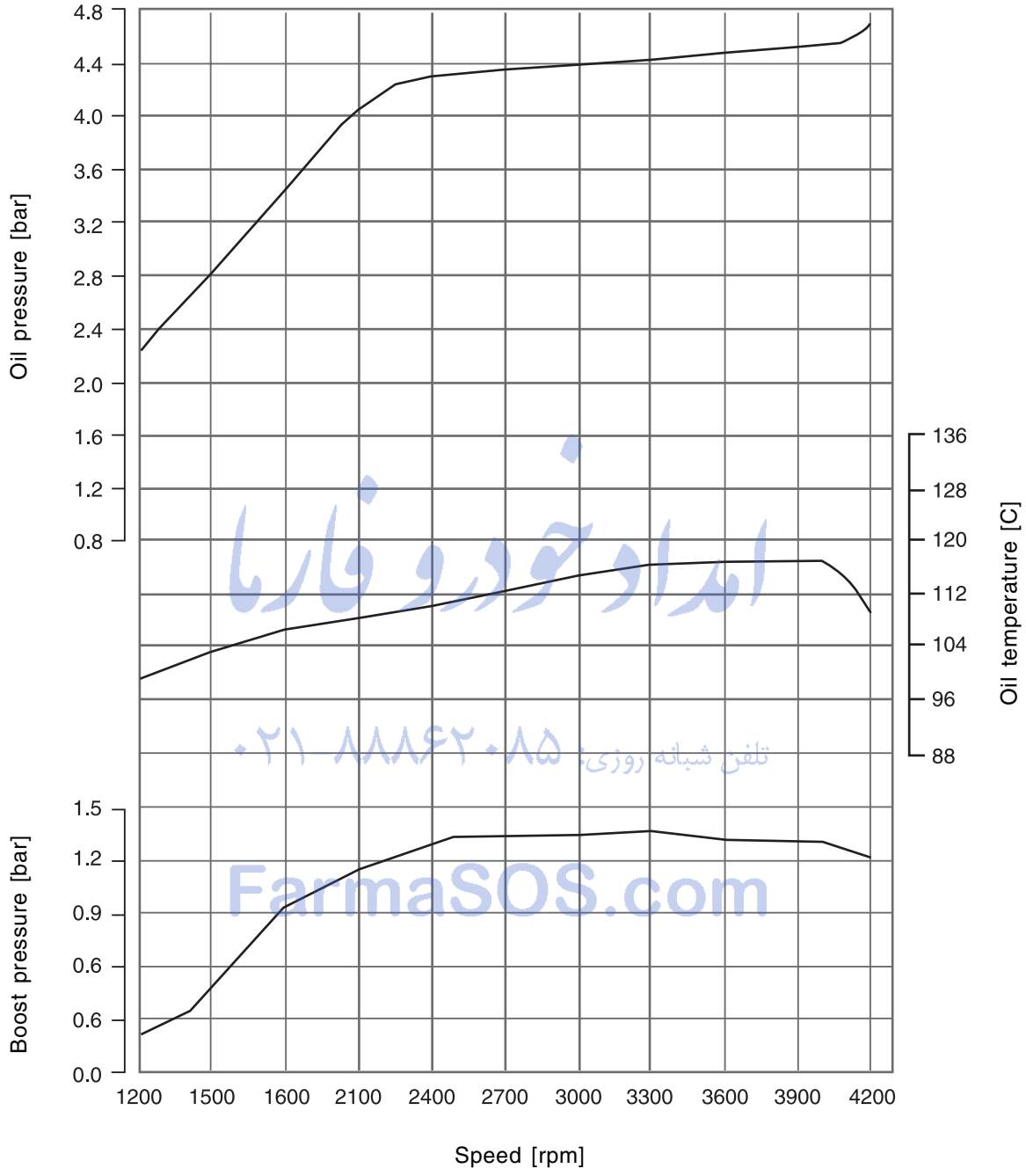

امداد خودرو فارما
تلفن شبانه روزی: ۰۲۱ ۸۸۸۶۲۰۸۵
FarmaSOS.com

GENERAL DIAGNOSIS

Condition		Probable Cause	Correction
Hard Starting (With normal cranking)	Malfunction of Ignition System	• Faulty fuse.	• Replace the fuse.
		• Faulty spark plug.	• Clean, adjust the plug gap or replace.
		• Electric leakage at the high tension cable.	• Replace the cable.
		• Poor connection of the high tension cable or lead wires.	• Replace the cable or wires.
		• Improper ignition timing.	• Adjust the ignition timing.
		• Faulty ignition coil.	• Replace the ignition coil.
	Malfunction of Fuel System	• Lock of fuel in the fuel tank.	• Feed the fuel.
		• Dirty or clogged fuel filter.	• Replace the filter.
		• Clogged fuel pipe.	• Clean the fuel pipe.
		• Malfunction of the fuel pump.	• Replace the fuel pump.
		• Malfunction of the fuel injector.	• Replace the injector.
		• The foreign material in the fuel tank.	• Clean the fuel tank.
	Decline of Compression Pressure	• Poor tightening spark plug.	• Tighten to the specified torque. Compression
		• Cracked cylinder head gasket.	• Replace the gasket.
		• Inadequate the valve clearance.	• Adjust the clearance.
		• Leakage of the valve clearance.	• Repair the valve.
		• Interference of the valve stem.	• Replace the valve or the valve guide.
		• Low elasticity or damage of the valve spring.	• Replace the valve spring.
		• Abnormal interference of pistons and cylinders.	• Replace the piston ring.
		• Excessive wear of pistons, rings, or cylinders.	• Replace the ring or the piston and boring or replace the cylinder.
	Others	• Broken timing belt.	• Replace the belt.
		• Loosening, damage or leakage of the vacuum hose.	• Connect the hose correctly or replace it.
		• Leakage of intake system.	• Replace intake system.
Lack of Engine Power	Decline of Compression Pressure	• Refer to above in this page.	• Refer to above in this page.
	Malfunction of Ignition System	• Improper ignition timing.	• Adjust the ignition timing.
		• Faulty spark plug.	• Adjust or replace the spark plug.
		• Electric leakage or poor connection of the high tension cable.	• Connect the cable correctly or replace it.

ایراد خودرو فارس
۰۲۱-۸۸۸۶۲۰۸۵ پاسخگوی شبانه روزی
FarsiaSOS.com

GENERAL DIAGNOSIS (Cont'd)

Condition		Probable Cause	Correction
Lack of Engine Power	Malfunction of Fuel System	• Clogged fuel pipe.	• Clean the pipe.
		• Clogged or contaminated fuel filter.	• Replace the filter.
	Others	• Clogged exhaust system.	• Check and repair the system.
		• Clogged or contaminated air cleaner element.	• Clean or replace the air cleaner element.
		• Leak of the intake manifold gasket.	• Replace the gasket.
		• Dragging brakes.	• Repair or replace the brakes.
Rough Engine Idling	Decline of Compression Pressure	• Refer to "Compression Pressure Test".	• Refer to "Compression Pressure Test".
	Malfunction of Fuel System	• Clogged fuel pipe.	• Clean the pipe.
		• Clogged or contaminated fuel filter.	• Replace the filter.
		• Malfunction of the fuel pressure regulator.	• Replace the regulator.
	Malfunction of Ignition System	• Malfunction of the spark plug.	• Adjust or replace the spark plug.
		• Electric leakage or poor connection of the high tension cable.	• Connect the cable correctly or replace it.
		• Poor ignition timing.	• Adjust the ignition timing.
		• Malfunction of the ignition coil.	• Replace the ignition coil.
	Others	• Clogged or contaminated air cleaner element.	• Clean or replace the air cleaner element.
		• Leak of the intake manifold gasket.	• Replace the gasket.
		• Poor connection or damage or leakage of the vacuum hose.	• Connect the hose correctly or replace it.
Engine Hesitate (Upon pressing accelerating pedal, the engine makes delayed response This situation is remarkable when cruising or starting.)	Decline of Compression Pressure	• Refer to "Compression Pressure Test".	• Refer to "Compression Pressure Test".
	Malfunction of Ignition System	• Poor ignition timing.	• Adjust the ignition timing.
		• Poor spark plug or Poor adjustment of the plug gap.	• Replace the plug or adjust the gap.
		• Electric leakage or poor connection of the high tension cable.	• Connect the cable correctly or replace it.
	Others	• Malfunction of the air cleaner system.	• Clean or replace the air cleaner system.
		• Leak of the intake manifold gasket.	• Replace the gasket.

امداد خودرو فارس
تلفن شبانه روزی ۰۲۱-۸۸۶۳۰۰۰۰
FarmaSOS.com

GENERAL DIAGNOSIS (Cont'd)

Condition		Probable Cause	Correction
Engine Surging (Engine power makes fluctuation in a fixed speed and speed changes without operating the accelerating pedal.)	Decline of Compression Pressure	• Refer to "Compression Pressure Test".	• Refer to "Compression Pressure Test".
	Malfunction of Fuel System	• Clogged fuel pipe.	• Clean the pipe.
		• Clogged or contaminated fuel filter.	• Replace the filter.
		• Malfunction of the fuel pressure regulator.	• Replace the fuel pressure regulator.
	Malfunction of Ignition System	• Malfunction of the spark plug.	• Adjust or replace the spark plug.
		• Electric leakage or poor connection of the high tension cable.	• Connect the cable correctly or replace it.
		• Poor ignition timing.	• Adjust the ignition timing.
	Others	• Leak of the intake manifold gasket.	• Clean or replace the gasket.
		• Leakage of the vacuum hose.	• Connect the hose correctly or replace it.
Excessive Detonation (According to the opening range of Malfunction of metallic is made with abnormal explosion)	Overtheated Engine	• Refer to "Overheat" in this page.	• Refer to "Overheat" in this page.
	Malfunction of Fuel System	• Abnormal spark plug.	• Replace the spark plug.
		• Poor ignition timing.	• Adjust the ignition timing
		• Electric leakage or poor connection of the high tension cable.	• Connect the cable correctly or replace it.
	Malfunction of Ignition System	• Clogged or contaminated fuel filter and fuel pipe.	• Clean or replace the fuel filter and the fuel pipe.
	Others	• Leak of the intake manifold gasket.	• Replace the gasket.
		• Excessive carbon deposit due to abnormal combustion.	• Remove the carbon.
Overheat	Malfunction of Cooling System	• Lack of coolant.	• Refill coolant.
		• Malfunction of the thermostat.	• Replace the thermostat.
		• Malfunction of the cooling fan.	• Check or replace the cooling fan.
		• Poor water pump performance.	• Replace the pump.
		• Clogged or leaky radiator.	• Clean, repair or replace the radiator.
	Malfunction of Lubrication System	• Poor engine oil.	• Replace engine oil with the specified one.
		• Blocking oil filter or strainer.	• Clean or repair the oil filter or the strainer.
		• Lack of engine oil.	• Refill oil.
		• Poor oil pump performance.	• Replace or repair the pump.
	Other	• Leakage of oil	• Repair.
		• Damaged cylinder head gasket.	• Replace the gasket.

ایراد خودرو فارما
تلفن شبانه روزی: ۰۲۱-۸۸۴۶۲۰۸۵
FarmaSOS.com

GENERAL DIAGNOSIS (Cont'd)

Condition		Probable Cause	Correction
Poor Fuel Consumption	Decline of Compression Pressure	• Refer to "Compression Pressure Test".	• Refer to "Compression Pressure Test".
	Malfunction of Fuel System	• Leakage of the fuel tank or the fuel pipe.	• Repair or replace the fuel tank or the fuel pipe
	Malfunction of Ignition System	• Improper ignition timing.	• Adjust the ignition timing.
		• Abnormal spark plug (Excessive carbon deposit, inadequate gap, burnt electrode).	• Replace the plug.
		• Electric leakage or poor connection of the high tension cable.	• Connect the cable normally or replace it.
	Malfunction of Cooling System	• Malfunction of the thermostat.	• Repair the thermostat.
	Others	• Improperly installed valve.	• Repair or replace the valve.
		• Low pressure of tires.	• Adjust the pressure of tires.
Excessive Consumption of Engine Oil	Leakage of Engine Oil	• Loosened oil drain plug.	• Tighten the plug.
		• Loosened oil pan bolt.	• Tighten the bolt. Engine Oil
		• Loosened oil filter.	• Tighten the filter.
		• Loosened oil pressure switch.	• Tighten the switch.
		• Leakage of camshaft front oil seal.	• Replace the seal.
		• Leakage of crankshaft front oil seal.	• Replace the seal.
		• Leakage at the cylinder head cover gasket.	• Replace the gasket.
		• Damage of the cylinder head gasket.	• Replace the gasket.
	Oil Mixing in Combustion Chamber	• Stuck piston ring.	• Remove carbon and replace the ring.
		• Worn piston or cylinder.	• Replace the piston or the cylinder.
		• Worn piston ring or ring groove.	• Replace the piston or ring.
		• Inadequate position of the piston ring cutting part.	• Adjust the position.
		• Abrasion or damage of the valve system.	• Replace the valve system.
Low Oil Pressure	Malfunction of Lubrication System	• Inadequate oil viscosity.	• Replace with the specified one.
		• Loosening of the oil pressure switch.	• Tighten the switch.
		• Lack of engine oil.	• Refill oil.
		• Blocking oil strainer.	• Clean the strainer.
		• Lowered function of the oil pump.	• Replace the pump.
		• Abrasion or damage of the oil pump relief valve.	• Replace the valve.

امداد خودرو فارما
تلفن شبانه روزی: ۰۲۱-۸۸۶۲۰۸۵
FarmaSOS.com

GENERAL DIAGNOSIS (Cont'd)

Condition		Probable Cause	Correction
Engine Noise	Valve Noise	• Inadequate valve clearance	• Adjust the valve clearance.
		• Abrasion of valve stem or guide.	• Replace the valve stem or the guide.
		• Weak valve spring.	• Replace the spring.
	Piston, Ring, Cylinder Noise	• Abrasion of the piston, the ring or the cylinder.	• Boring the cylinder or replace the piston, the ring or the cylinder.
	Connecting Rod Noise	• Abrasion of the connecting rod bearing.	• Replace the bearing.
		• Loosened the connecting rod nut.	• Tighten to the specified torque
	Crankshaft Noise	• Abrasion of the crankshaft bearing.	• Replace the bearing.
		• Abrasion of the crankshaft journal.	• Grind or replace the crankshaft journal.
		• Loosened bearing cap bolt.	• Tighten to the specified torque.
		• Excessive clearance of the crankshaft thrust bearing.	• Adjust or replace.
		• Low oil pressure.	• Refer to "Low Oil Pressure" in this section.

آداد خودرو فارما
تلفن شبانه روزی: ۰۲۱-۸۸۸۶۲۰۸۵
FarmaSOS.com

DIAGNOSTIC INFORMATION AND PROCEDURE

OIL LEAK DIAGNOSIS

Most fluid oil leaks are easily located and repaired by visually finding the leak and replacing or repairing the necessary parts. On some occasions a fluid leak may be difficult to locate or repair. The following procedures may help you in locating and repairing most leaks.

▶ Finding the Leak

1. Identify the fluid. Determine whether it is engine oil, automatic transmission fluid, power steering fluid, etc.
2. Identify where the fluid is leaking from.
   - 2.1 After running the vehicle at normal operating temperature, park the vehicle over a large sheet of paper.
   - 2.2 Wait a few minutes.
   - 2.3 You should be able to find the approximate location of the leak by the drippings on the paper.
3. Visually check around the suspected component. Check around all the gasket mating surfaces for leaks. A mirror is useful for finding leaks in areas that are hard to reach.
4. If the leak still cannot be found, it may be necessary to clean the suspected area with a degreaser, steam or spray solvent.
   - 4.1 Clean the area well.
   - 4.2 Dry the area.
   - 4.3 Operate the vehicle for several miles at normal operating temperature and varying speeds.
   - 4.4 After operating the vehicle, visually check the suspected component.
   - 4.5 If you still cannot locate the leak, try using the powder or black light and dye method.

▶ Powder Method

1. Clean the suspected area.
2. Apply an aerosol-type powder (such as foot powder) to the suspected area.
3. Operate the vehicle under normal operating conditoins.
4. Visually inspect the suspected component. You should be able to trace the leak path over the white powder surface to the source.

▶ Black Light and Dye Method

A dye and light kit is available for finding leaks, Refer to the manufacturer's directions when using the kit.

1. Pour the specified amount of dye into the engine oil fill tube.
2. Operate the vehicle normal operating conditions as directed in the kit.
3. Direct the light toward the suspected area. The dyed fluid will appear as a yellow path leading to the source.

▶ Repairing the Leak

Once the origin of the leak has been pinpointed and traced back to its source, the cause of the leak must be determined in order for it to be repaired properly. If a gasket is replaced, but the sealing flange is bent, the new gasket will not repair the leak. The bent flange must be repaired also. Before attempting to repair a leak, check for the following conditions and correct them as they may cause a leak.

▶ Gaskets

- The fluid level/pressure is too high.
- The crankcase ventilation system is malfunctioning.
- The fasteners are tightened improperly or the threads are dirty or damaged.
- The flanges or the sealing surface is warped.
- There are scratches, burrs or other damage to the sealing surface.
- The gasket is damaged or worn.
- There is cracking or porosity of the component.
- An improper seal was used (where applicable).

Seals

- The fluid level/pressure is too high.
- The crankcase ventilation system is malfunctioning.
- The seal bore is damaged (scratched, burred or nicked).
- The seal is damaged or worn.
- Improper installation is evident.
- There are cracks in the components.
- The shaft surface is scratched, nicked or damaged.
- A loose or worn bearing is causing excess seal wear.

FarmaSOS.com

COMPRESSION PRESSURE TEST

The compression pressure test is to check the conditions of internal components (piston, piston ring, intake and exhaust vale, cylinder head gasket). This test provides current engine operating status.

Notice

- ***Before cranking the engine, make sure that the test wiring, tools and persons are keeping away from moving components of engine (e.g., belt and cooling fan).***
- ***Park the vehicle on the level ground and apply the parking brake.***
- ***Do not allow anybody to be in front of the vehicle.***



Y220_01005

امداد چادرو فارما
CarmaSOS.com

▶ Specifications

Compression ratio		18 : 1
Test temperature		at normal operating temperature (80°C)
Compression pressure	Normal value	32 bar
	Minimum value	18 bar
Permissible pressure difference between individual cylinders		Max. 3 bar

▶ Measuring Procedure

Notice

- ***Disconnect the fuel rail pressure sensor connector to cut off the fuel injection.***
- ***Discharge the combustion residues in the cylinders before testing the compression pressure.***
- ***Apply the parking brake before cranking the engine.***

1. Warm the engine up to normal operating temperature (80°C).
2. Disconnect the fuel rail pressure sensor connector to cut off the fuel injection.
3. Place the diagram sheet to compression pressure tester.

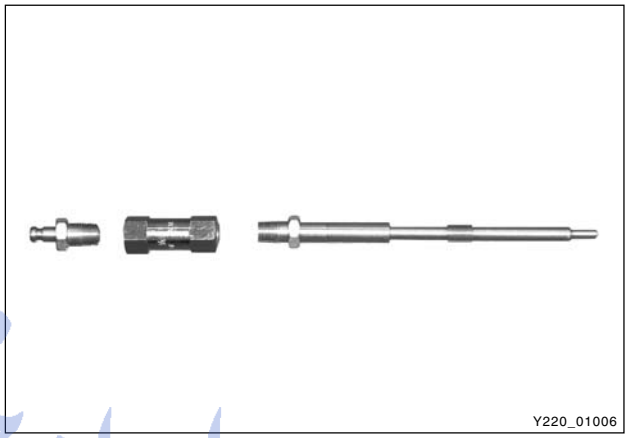
Y220_01006

4. Remove the glow plugs and install the compression pressure tester into the plug hole.

Tightening torque (Tester)	15 Nm

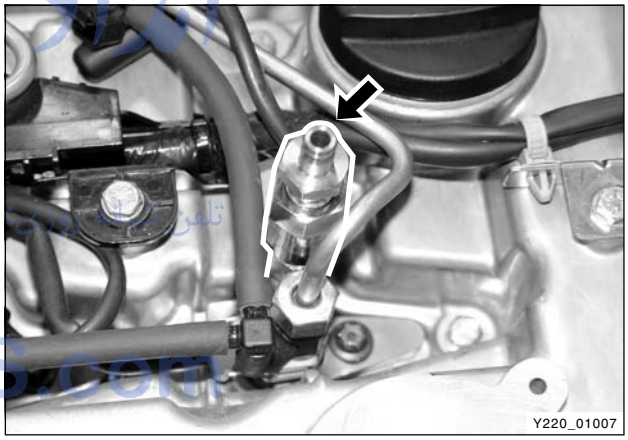
Y220_01007

5. Crank the engine for approx. 10 seconds by using the start motor.
6. Record the test result and measure the compression pressure of other cylinders with same manner.
7. If the measured value is not within the specifications, perform the cylinder pressure leakage test.

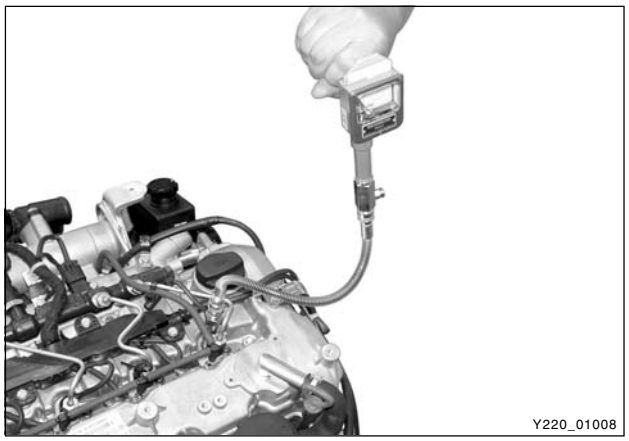
Y220_01008

ایران خودرو فارما
۰۲۱-۸۸۸۶۲۰۸۵
FarmaSOS.com

CYLINDER PRESSURE LEAKAGE TEST

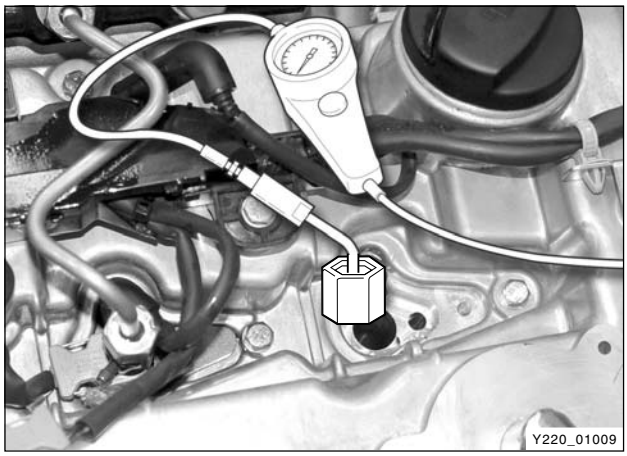

If the measured value of the compression pressure test is not within the specifications, perform the cylinder pressure leakage test.

▶ Permissible Pressure Leakage

Test temperature	at normal operating temperature (80°C)
At whole engine	Max. 25 %
At valve and cylinder head gasket	Max. 10 %
At piston ring	Max. 20 %

امداد خودرو فارما
تلفن شبانه روزی: ۰۲۱-۸۸۸۶۲۰۸۵
FarmaSOS.com

Notice

- ***Perform the pressure in order: 1 - 2 - 3 - 4 - 5***
- ***Do not test the cylinder pressure leakage with wet type test procedure. (do not inject the engine oil into the combustion chamber)***

TIGHTENING TORQUE

NO.	Name	Size	Quantity	Tightening Torque
1	Oil nozzle	M6 x 22	5	10 ± 1
2	Main bearing cap	M11 x 62	12	55 ± 5 90° ± 10°
3	Connecting rod cap	M9 x 52	5	40 ± 5 90° ± 10°
4	Rear cover	M6 x 20	6	10 ± 1
5	Oil pump	M8 x 35SOC	3	25 ± 2.5
6	Oil baffle plate assembly	M6 x 20	10	10 ± 1
7	T.G.C.C	M6 x 16	1	10 ± 1
		M6 x 40	6	10 ± 1
		M6 x 60	3	10 ± 1
		M6 x 70	2	10 ± 1
		M8 x 80SOC	1	25 ± 2.5
8	Flywheel	M10 x 30	8	45 ± 5 90° ± 10°
9	Crankshaft hub	M18 x 50	1	325 ± 33 90° ± 10°
10	Oil pan	M6 x 20	24	10 ± 1
		M6 x 35	3	10 ± 1
		M6 x 38	3	10 ± 1
		M6 x 40	4	25 ± 2.5
11	High pressure pump assembly	M8 x 40	4	25 ± 2.5
12	High pressure pump sprocket assembly	M14 x 1.5-8-1	1	65 ± 5
13	High pressure pump bracket	M7 x 16	3	20 ± 2 x 90° + 10°
14	Cylinder head assembly	M8 x 25	2	25 ± 2.5
		M8 x 50	2	
		M12 x 177	11	Step1: 20 Nm ± 2 Nm Step2: 85 Nm ± 5 Nm
		M12 x 158	1	Step3: 3 x 90° + 10°
15	Camshaft cap	M8 x 60	24	25 ± 2.5
16	Stud bolt	M8	10	15 ± 1.5
17	Camshaft sprocket (Intake)	M11 x 52	1	25 ± 2.5
	Camshaft sprocket (Exhaust)		1	90° ± 10°
18	Chain tensioner	M22	1	65 ± 5
19	Coolant temperature sensor	M14	1	22 ± 2.2

امداد خودرو فارما
۰۲۱-۸۸۸۶۱۰۸۵ تلفن پاسخگویی روزی
FarmaSOS.com

CHANGED BY	
EFFECTIVE DATE	
AFFECTED VIN	

NO.	Name	Size	Quantity	Tightening Torque
20	Auto tensioner	M8 x 45(LOWER)	1	32 ± 3
		M12 x 90	1	82 ± 6
21	Water pump assembly	M6 x 50	7	10 ± 1
22	Water pump pulley	M6 x 12	4	10 ± 1
23	Hot water inlet pipe assembly	M6 x 12	2	10 ± 1
24	Alternator bracket	M8 x 32	4	25 ± 2.5
25	Alternator	M10 x 90	2	46 ± 4.6
26	Air conditioner compressor assembly	M8 x 95	4	46 ± 4.6
27	Air conditioner compressor bracket assembly	M8 x 25	1	25 ± 2.5
		M8 x 60	3	25 ± 2.5
28	Air conditioner compressor sub bracket assembly	M6 x 14	1	10 ± 1.0
		M8 x 16	1	25 ± 2.5
29	Intake manifold	M8 x 45	6	25 ± 2.5
		M8 x 130	6	25 ± 2.5
30	Bracket	M6 x 16	1	10 ± 1.0
31	Knock sensor	M8 x 28	2	20 ± 2.6
32	Camshaft position sensor	M8 x 16	1	12 ± 1.7
33	Booster pressure sensor	M6 x 16	2	10 ± 1.0
34	Exhauster manifold	M8	10	40 ± 4
35	Turbo charger assembly	M8	4	25 ± 2.5
36	Turbo charger adaptor piece	M8	1	32 ± 3.2
37	Nut	M8	1	25 ± 2.5
38	Combination bolt	M8 x 22	1	25 ± 2.5
39	T/C oil supply pipe	M6 x 16 (Cylinder block side)	1	25 ± 2.5
		M16 (T/C side)	1	20 ± 2.0
40	T/C oil return pipe	M6 x 16 (T/C side)	2	10 ± 1.0
		M6 x 16 (Cylinder block side)	2	10 ± 1.0
41	EGR valve assembly	M8 x 22	2	25 ± 2.5
42	EGR-LH pipe bolt	M6 x 16	2	10 ± 1.0
		M8 x 22	2	35 ± 2.0
43	EGR combination bolt	M6 x 16	4	10 ± 1.0
		M8 x 16	4	25 ± 2.5
	EGR-RH pipe nut	M8	2	35 ± 2.0
44	Glow plug cable nut	M5	5	15 ± 3
45	Vacuum pump	M6 x 20	3	10 ± 1.0
46	Cooling fan bracket assembly	M6 x 25	5	10 ± 1.0
		M6 x 65	1	10 ± 1.0
		M6 x 85	3	10 ± 1.0
47	Cylinder head cover	M6 x 35	21	23 ± 2.3

امداد خودرو فارما
تلفن شبانه روزی: ۰۲۱-۸۸۸۶۲۰۸۵
FarmaSOS.com

NO.	Name	Size	Quantity	Tightening Torque
48	Vacuum modulator	M6 x 16SOC	4	10 ± 1.0
49	WDT combination bolt	M6 x 16	3	10 ± 1.0
50	Oil dipstick tube	M6 x 16	1	10 ± 1.0
51	Oil filter assembly	M8 x 35SOC	1	25 ± 2.5
		M8 x 50SOC	2	25 ± 2.5
		M8 x 55SOC	1	25 ± 2.5
52	Fuel rail assembly	M8 x 35SOC	3	25 ± 2.5
53	Injector clamp washer	M6 x 60	5	10 ± 1.0 180 + 20°
54	Fuel pipe clip (H-C)	M6 x 19	1	10 ± 1.0
55	Fuel pipe clip (C-I)	M6 x 16	5	10 ± 1.0
56	Crankshaft position sensor	M5 x 17	1	0.8 ± 0.4
57	Crankshaft position sensor	GAP		0.7 ~ 1.5
58	Fuel pressure sensor		1	
59	Wiring	M6 x 16	5	10 ± 1.0
60	Intake manifold bracket	M8 x 16	2	25 ± 2.5
		M8 x 40	2	25 ± 2.5
61	Power steering pump	M8 x 100	2	25 ± 2.5
		NUT	2	25 ± 2.5
62	Piston protrusion		5	0.765 ~ 1.055
63	Clearance between connecting rod and pin boss		5	0.05 ~ 0.31
64	End play of crankshaft	NEW: 0.100 ~ 0.245 mm // USED: 0.300 mm		

امداد خودرو فارما
تلفن شبانه روزی: ۰۲۱-۸۸۸۶۲۰۸۵
FarmaSOS.com

CHANGED BY	
EFFECTIVE DATE	
AFFECTED VIN	

REMOVAL AND INSTALLATION

ENGINE MOUNTING

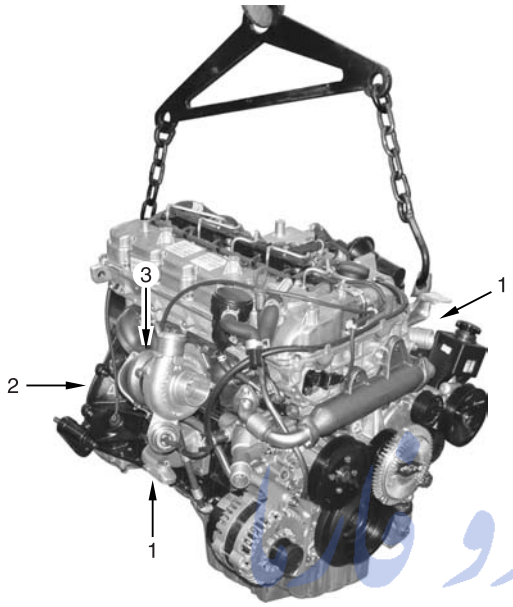

1. Side Mountings

Left

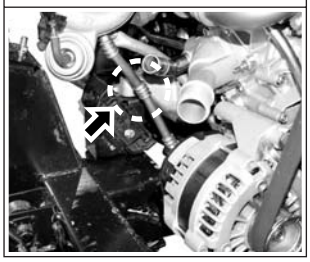

Right

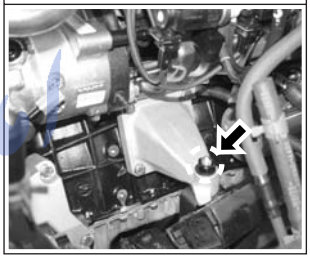

2. Transmission Mounting

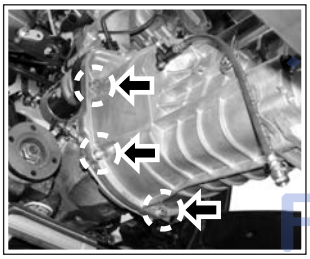

3. Exhaust Manifold and Pipe

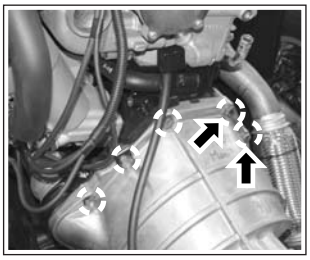

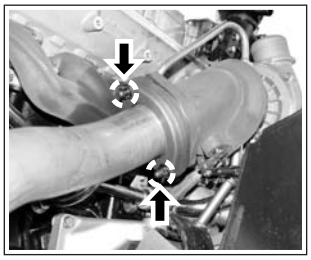

4. Cables and Connectors



Y220_01010

امداد خودرو فارما
تلفن شبانه روزی: ۲۱-۸۸۸۶۲۰۸۵
FarmaSOS.com

Notice

1. *Disconnect the negative battery cable before removal.*
2. *Drain the engine oil.*
3. *Drain the engine coolant.*
4. *Be careful not to splash the fuel to the vehicle body. It may cause a fire or vulcanization of rubber products. Make sure to block the fuel related hoses before removal.*

Engine Assembly - Removal

1. Disconnect the negative battery cable.

   Notice

   If not necessary, place the ignition switch at "OFF" position.

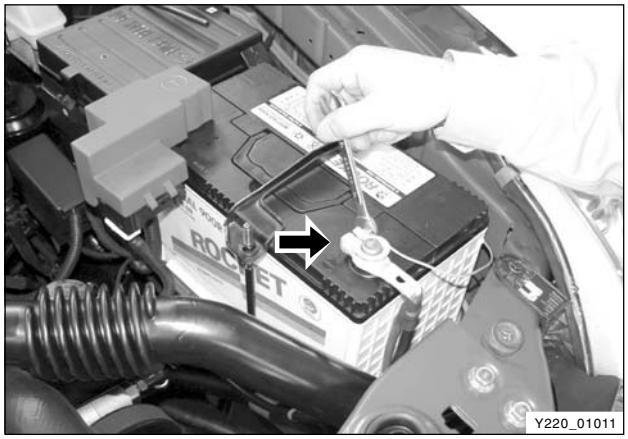

2. Remove the engine hood assembly.

   Note

   Refer to "Body" section.

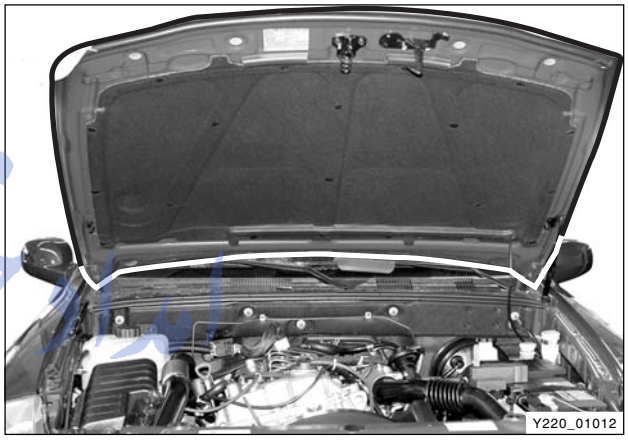

3. Remove the skid plate under the engine compartment.

   Installaiton Notice

Tightening torque	12 ± 1.2 Nm

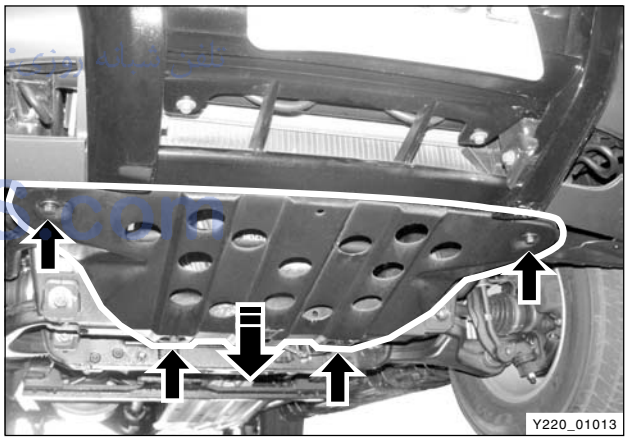

4. Loosen the radiator drain cock and drain the coolant.

   Notice

   1. ***Be careful not to contact with coolant. If contacted, wash with soap and water to ensure all coolant is removed.***
   2. ***Use only designated coolant.***
   3. ***Open the coolant reservoir cap to help the draining.***

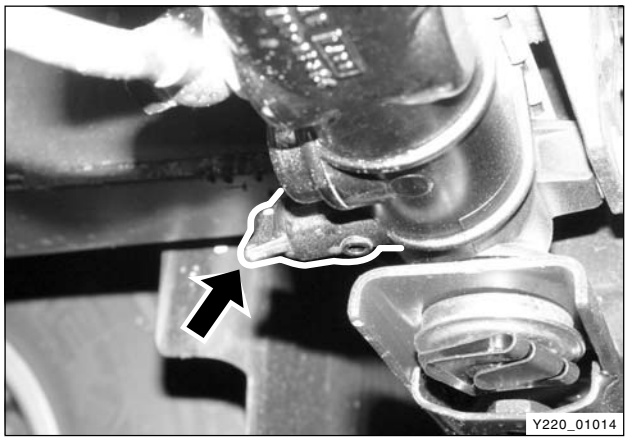

امداد خودرو فارما
۰۲۱-۸۸۸۶۲۰۸۵
FarmaSOS.com

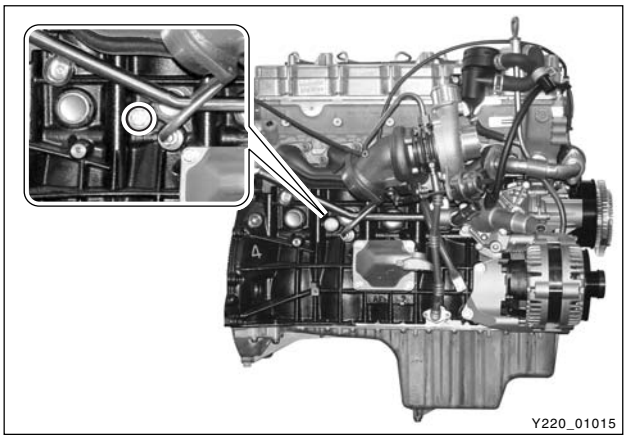

5. Loosen the cylinder block drain plug (under the intake manifold) and drain the coolant completely.
6. Retighten the drain plug with the specified tightening torque.

Tightening torque	30 Nm

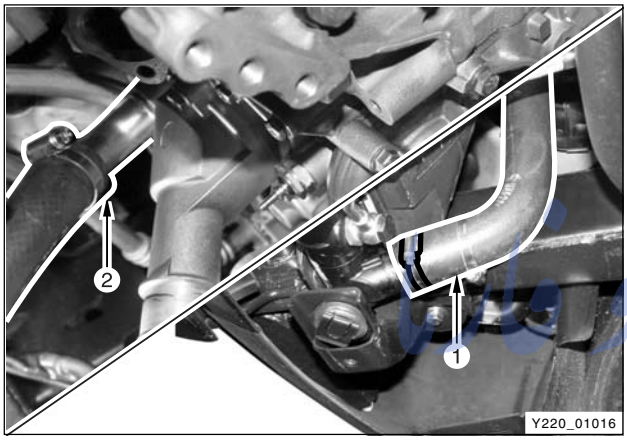

7. Remove the inlet hose (1) and the heater hose (2) under the radiator.

Notice

Be careful not to damage the rubber hose.

امداد خودرو ما
تلفن شبانه روزی: ۰۲۱-۸۸۶۲۰۸۵
FarmaSOS.com

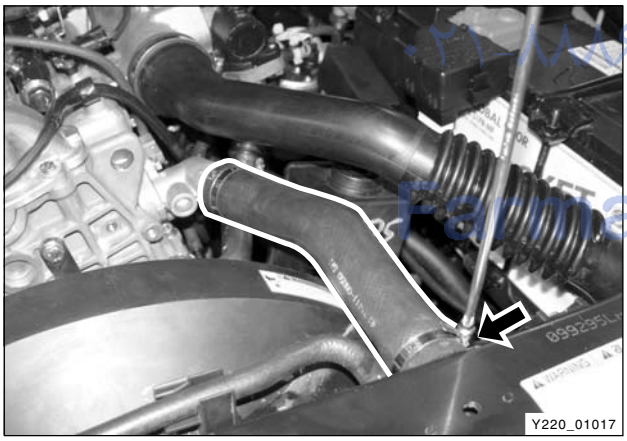

8. Remove the coolant outlet hose over the radiator.

Notice

Be careful not to damage the rubber hose.

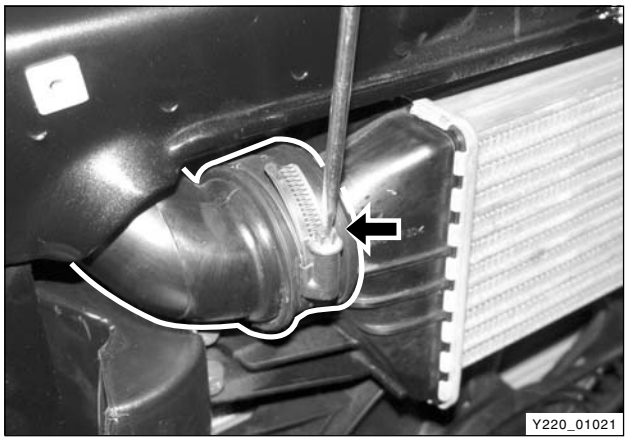

9. Remove the radiator grille and loosen the hose clamp on the outlet port of turbo intercooler.

Note

For the removal and installation of radiator grille, refer to "Cooling System" section.

10. Loosen the hose clamp on intake air hose of turbo charger and remove the intake air hose.

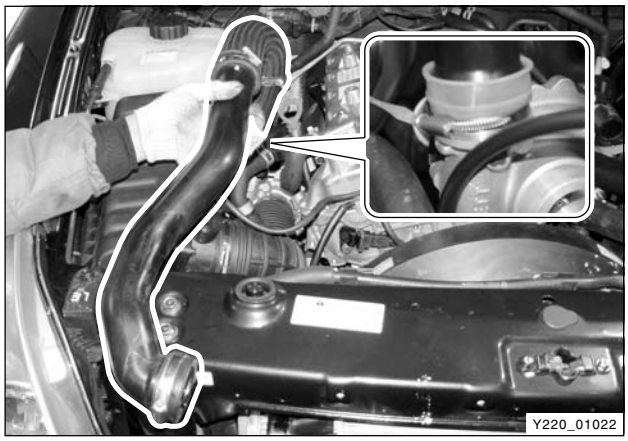

11. Separate the outlet hose of oil separator from the intake air hose of turbo charger.
12. Loosen the clamp on the intake air duct hose of turbo charger at the air cleaner side and separate the hose from the air cleaner housing.

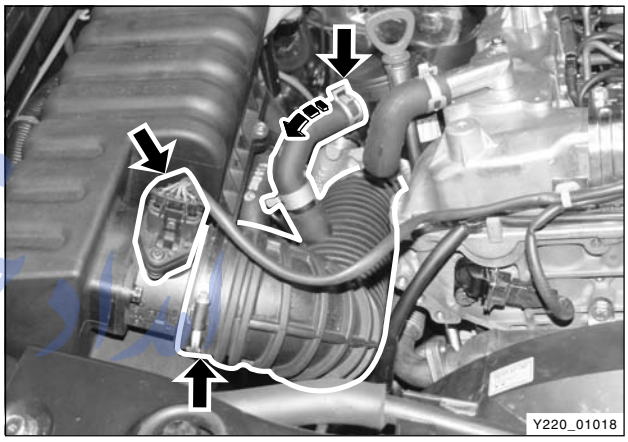

13. Loosen the clamps and remove the intake air hose from the turbo charger.



14. Loosen the clamp on the inlet hose of intercooler.



امداد خودرو فارما
۰۲۱-۸۸۸۶۲۰۸۵ تلفن پاسخگویی روزی
FarmaSOS.com

CHANGED BY	
EFFECTIVE DATE	
AFFECTED VIN	

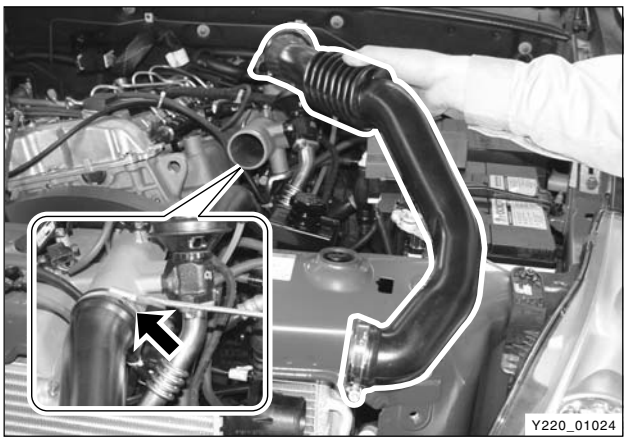

15. Loosen the clamp on the intake manifold and remove the intake air hose.

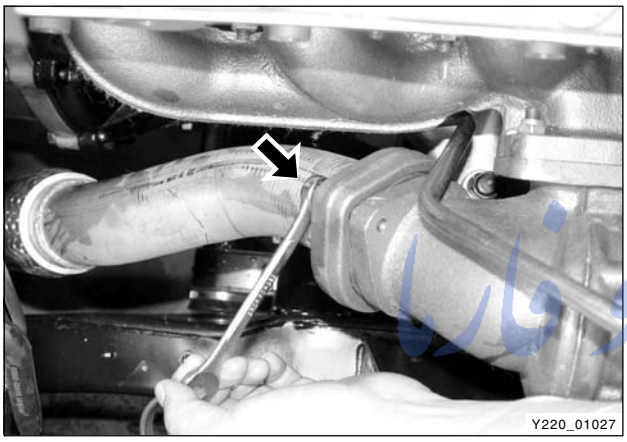

16. Remove the exhaust pipe mounting nuts from the turbo charger.

Installation Notice

Tightening torque	25 ± 2.5 Nm

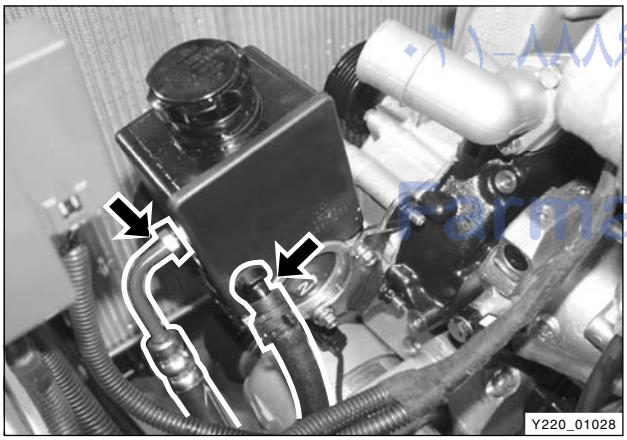

17. Remove the power steering inlet pipe and the outlet hose from the power steering pump.

Notice

Plug the openings of hoses and pump with caps not to flow out the oil.

Installation Notice

Inlet pipe union nut	25 ± 2.5 Nm

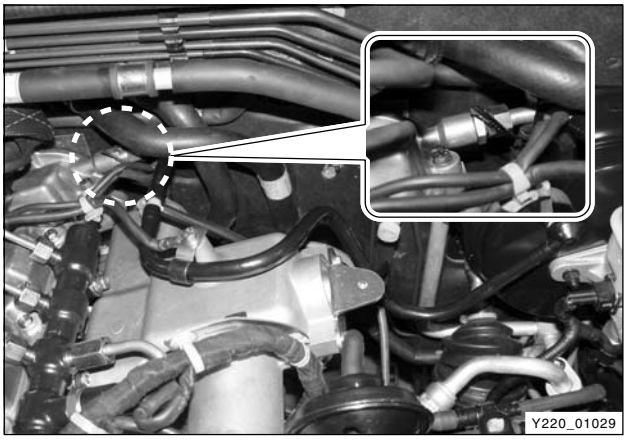

18. Remove the vacuum hose from the brake booster.

Installation Notice

Vacuum pipe union nut (at vacuum pump side)	10 Nm

امداد خودرو فارما
FarmaSOS.com

19. Remove the supply inlet, supply outlet and return hose from the fuel filter.

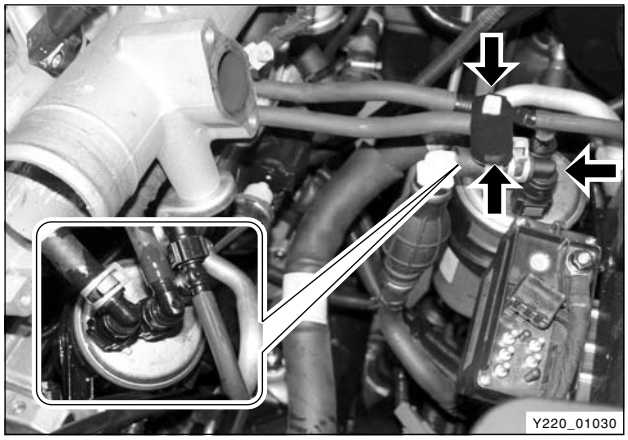

Notice

1. When separating the hoses from the fuel filter, plug the openings with caps so that the contaminants will not get into the fuel system.

2. Mark on all the hoses not to be mixed each other.

20. Remove the engine oil heater outlet hose.
21. Disconnect the cables from the cylinder block and other components.

    (e.g., coolant temperature sensor cable and oil temperature switch)

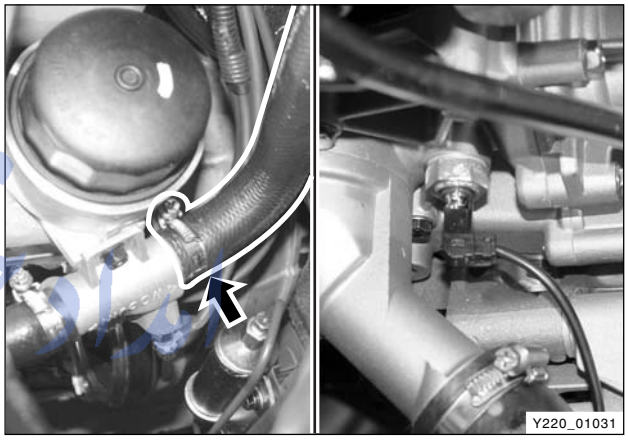

امداد خودرو فارما
۰۲۱-۸۸۸۶۲۰۸۵
FarmaSOS.com

22. Disconnect the engine ground cable and the alternator "+" terminal cable.

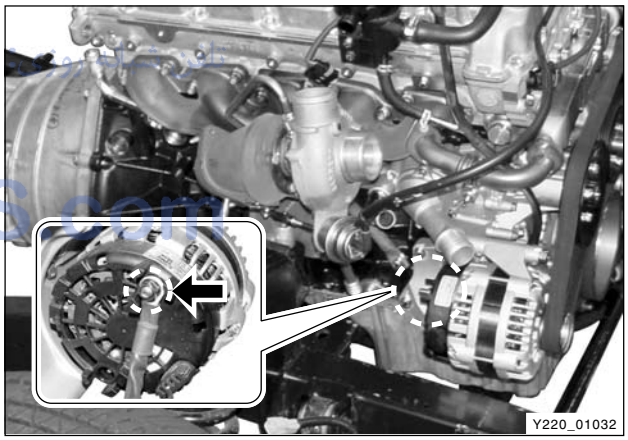

Notice

Make sure to properly tighten the cable nuts when installing. Otherwise, it may cause a poor ground or electric charging problem.

23. Disconnect the "ST" terminal and "+" terminal cables from the starter motor.

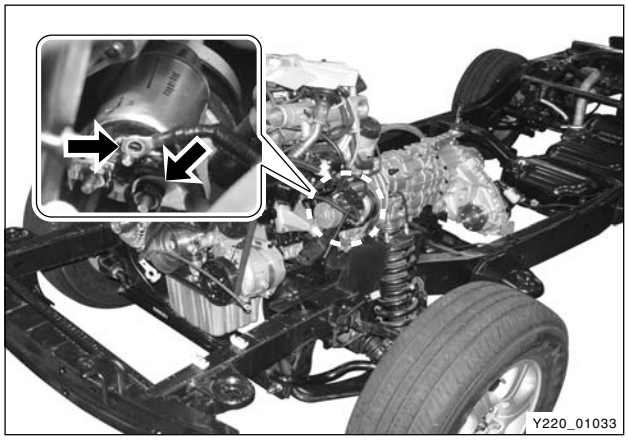

Notice

Make sure to properly tighten the cable nuts when installing. Otherwise, it may cause an engine starting problem.

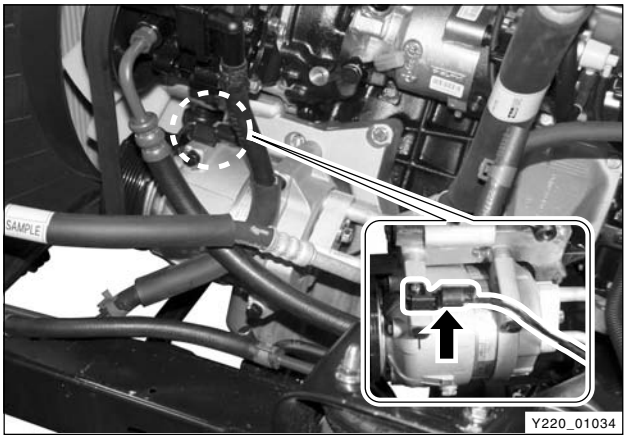

24. Disconnect the air conditioner compressor connector and remove the inlet and outlet pipes from the compressor.

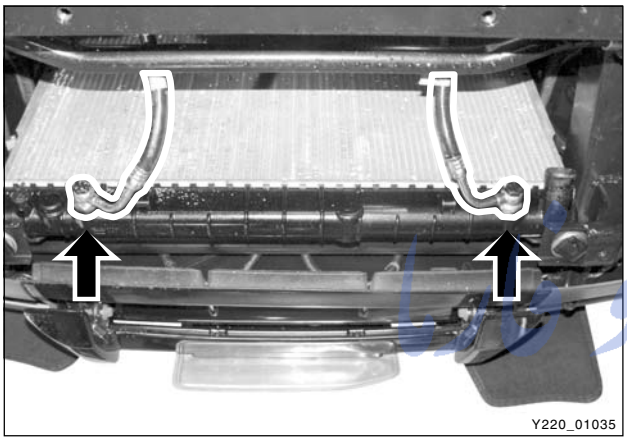

25. For the automatic transmission equipped vehicle, remove the oil cooler pipes.

امداد خودرو شما
تلفن شبانه روزی: ۰۲۱-۸۸۶۲۰۸۵
ZamaSOS.com

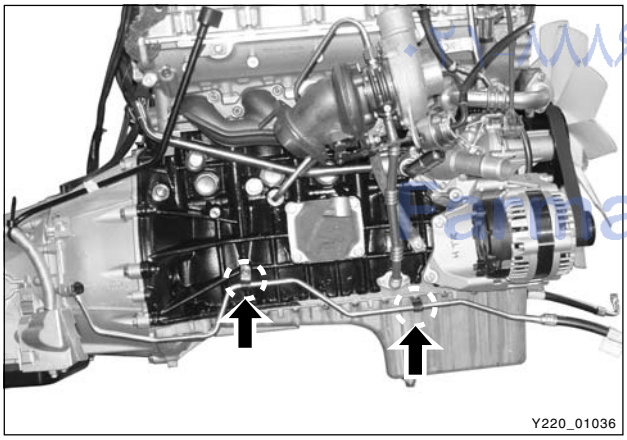

Note

The oil cooler pipes are connected to cylinder block at both sides and bottom area of oil with brackets.

Installation Notice

Pipe mounting bracket bolt	25 ± 2.5 Nm
Pipe hose (radiator side) union nut	25 ± 2.5 Nm

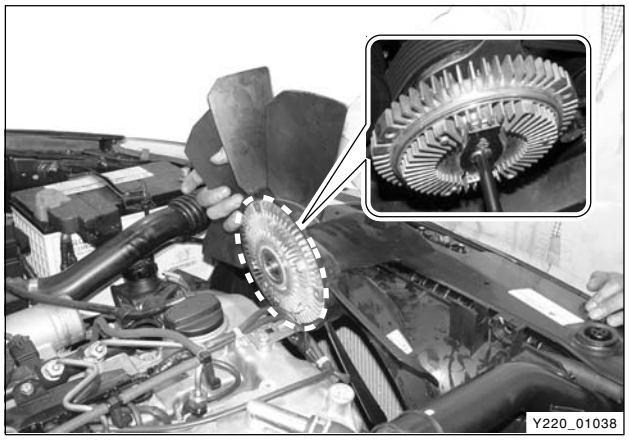

26. Set up the special to the cooling fan pulley and remove the cooling fan assembly. To make the removal easier, loosen the radiator shroud.

Installation Notice

Cooling fan pulley bolt	10 ± 1.0 Nm

27. Remove the radiator shroud.

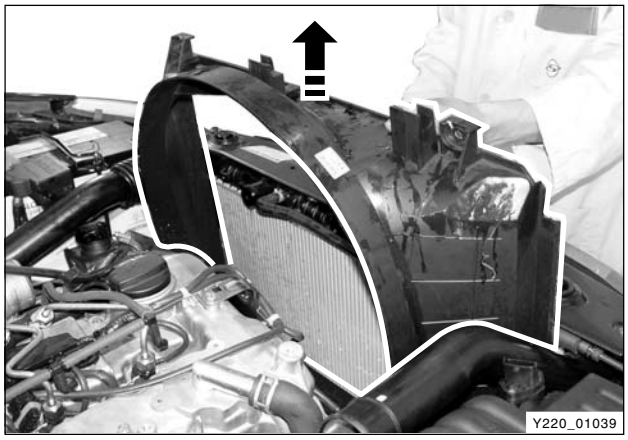

Installation Notice

Tightening torque	10 ± 1.0 Nm

28. Take off the fan belt from the engine.

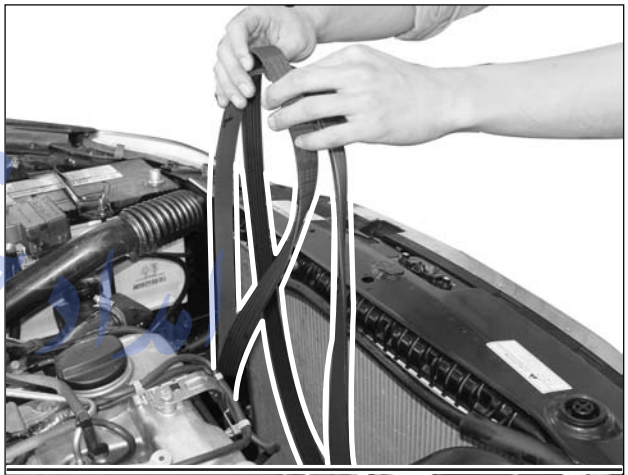

Note

1. ***Insert a tool into the belt tensioner and rotate it counterclockwise to take off the fan belt.***
2. ***After installation of the fan belt, pump the belt tensioner 3 to 4 times.***

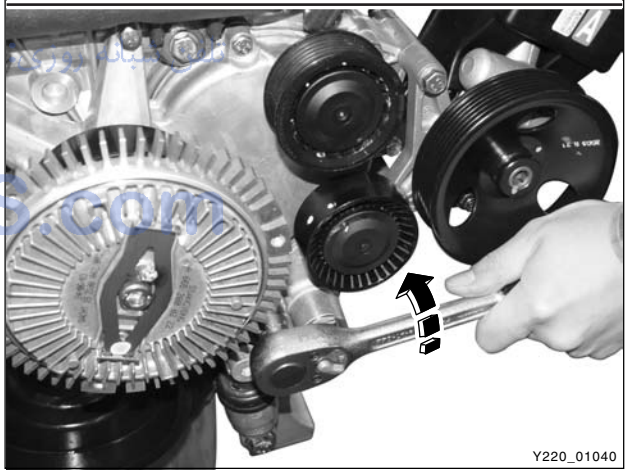

FarmaSOS.com

29. Remove the transmission mounting bolts and separate the engine assembly from the transmission assembly.

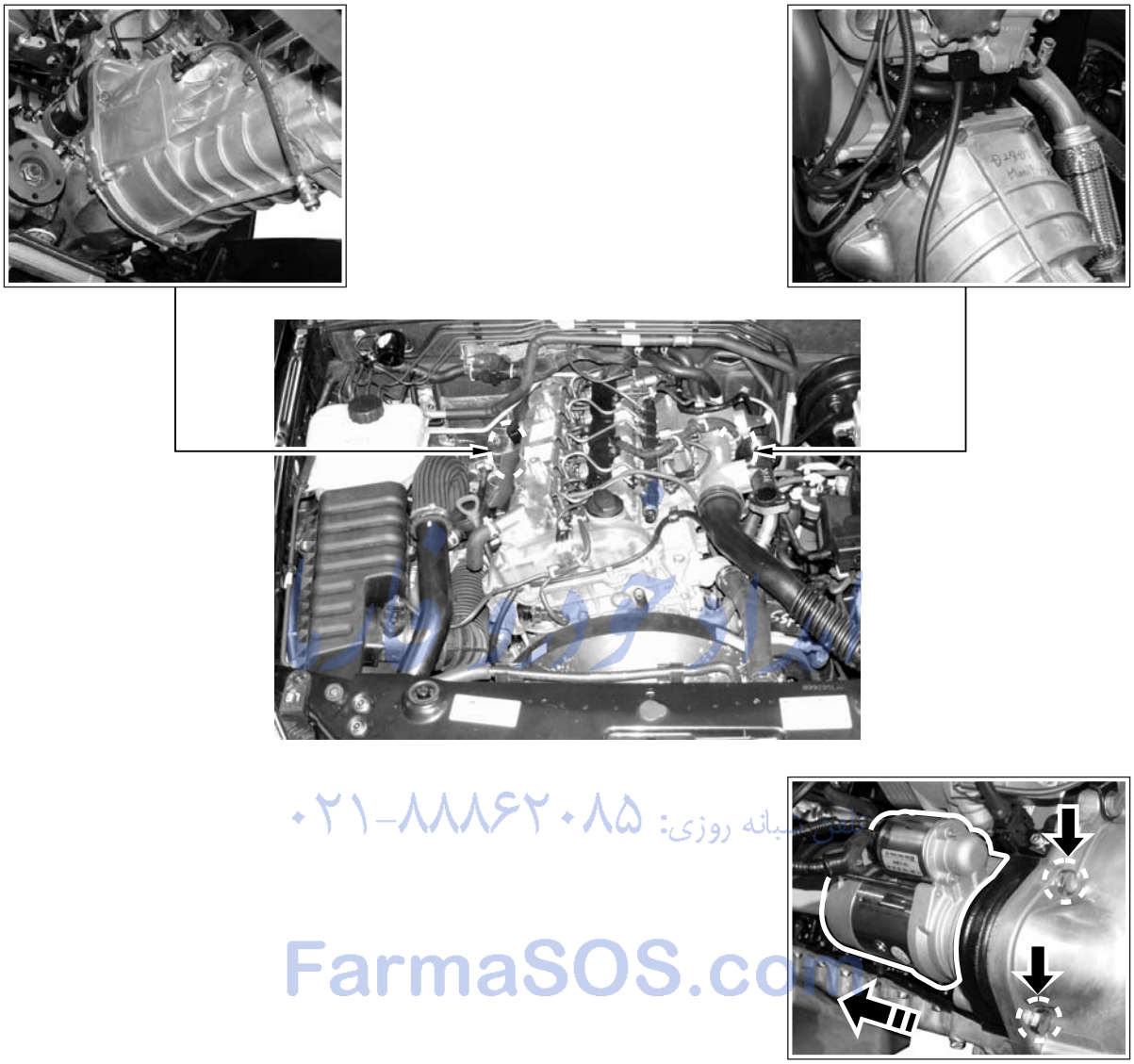

Y220_01041

۰۲۱-۸۸۸۶۲۰۸۵ پشتیبانه روزی:
FarmaSOS.com

Note

1. ***Before unscrewing the transmission mounting bolts, remove the starter motor.***

Installation Notice

Mounting bolt	55 ± 5 Nm

30. Remove the engine assembly mounting nuts at both sides.

Installation Notice

Mounting Nut	55 ± 5 Nm

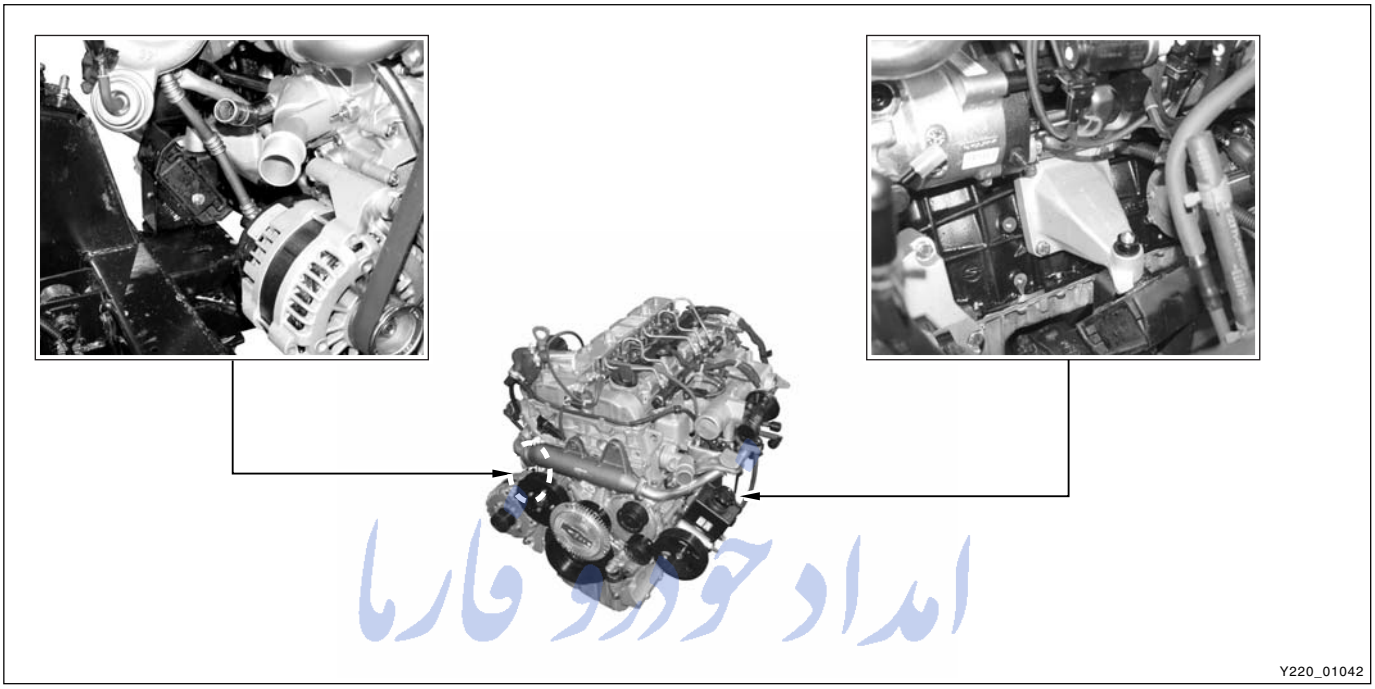

31. Hook the chain on the engine brackets and carefully pull out the engine assembly from the vehicle by using a hoist or crane.

32. Put the removed engine assembly on the safety stand.

امداد خودرو فارما
تلفن شبانه روزی: ۰۲۱-۸۸۸۶۲۰۸۵
FarmaSOS.com

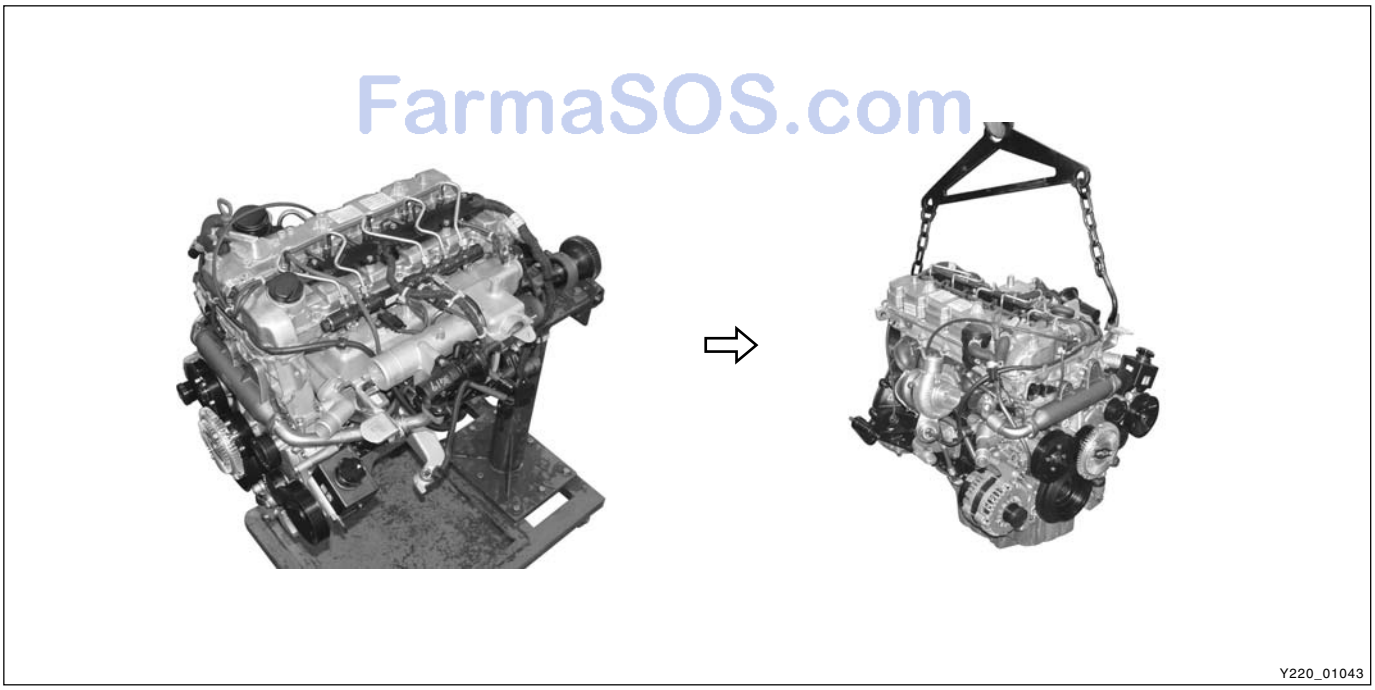

CHANGED BY	
EFFECTIVE DATE	
AFFECTED VIN	

DISASSEMBLY AND REASSEMBLY

COMPONENTS AND SPECIAL TOOLS

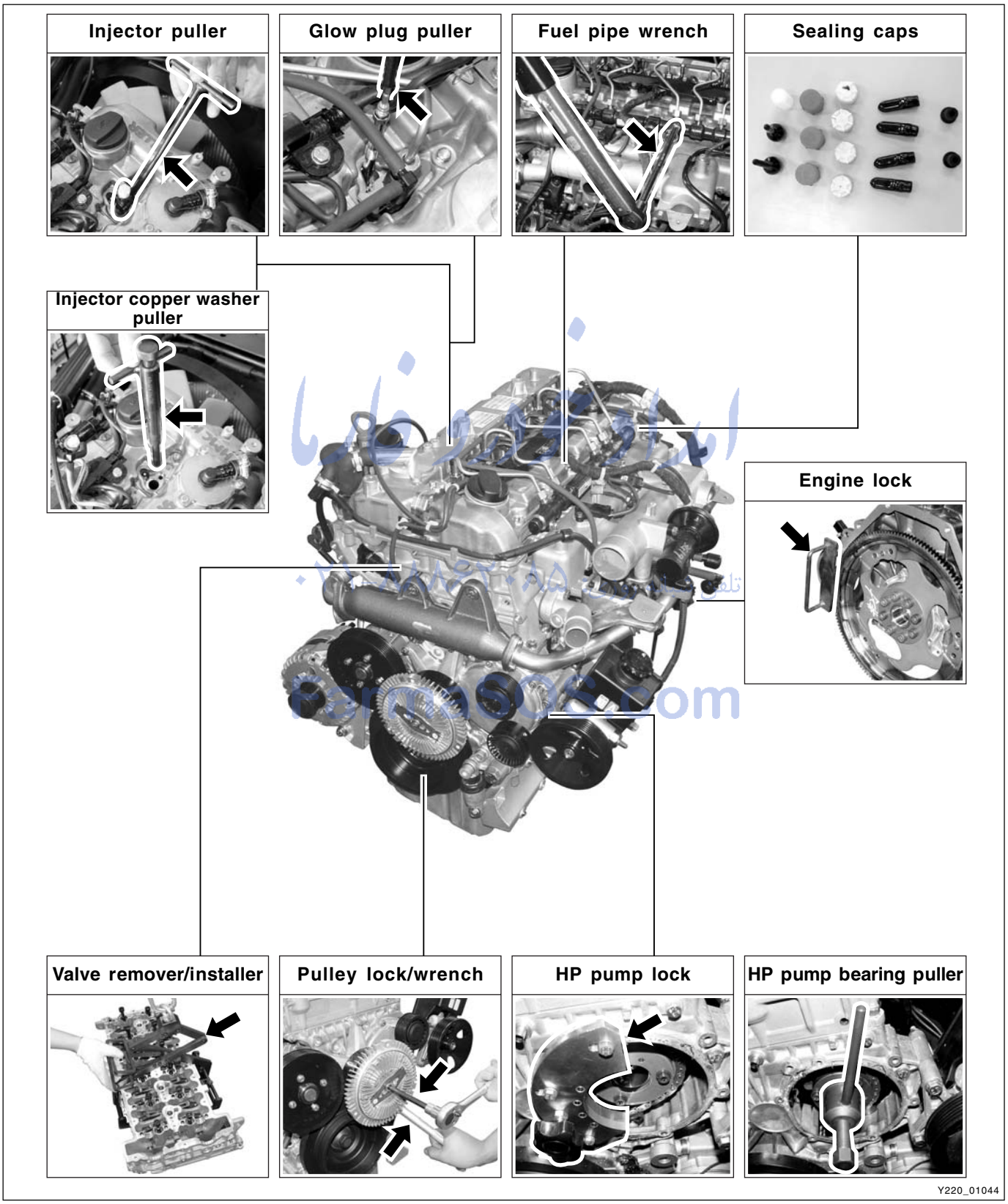

CHANGED BY	
EFFECTIVE DATE	
AFFECTED VIN	

Inspection Before Disassembly and Reassembly

Preparations and Preceding Works

1. Remove the cylinder block drain plug and seal and completely drain the residual coolant from the cylinder block.

Tightening torque	30 Nm

Notice

Replace the seal with new one once removed.

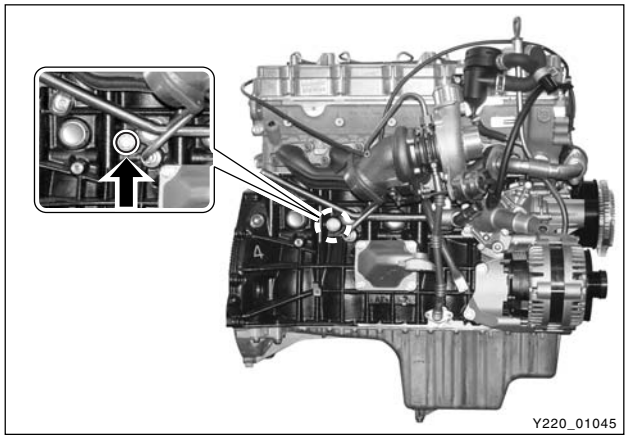

2. When the fan belt is installed, gently pump the belt shock absorber mounting bolt (M19) 3 times.
3. Take off the fan belt while pushing the mounting bolt (M19).

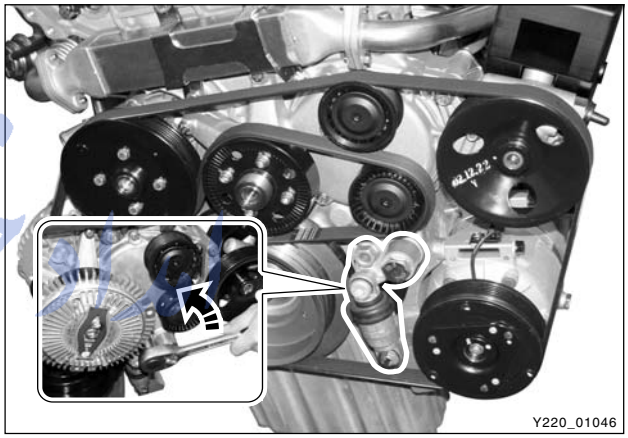

4. Loosen the oil drain plug and completely drain the engine oil.

Drain plug	25 ± 2.5 Nm

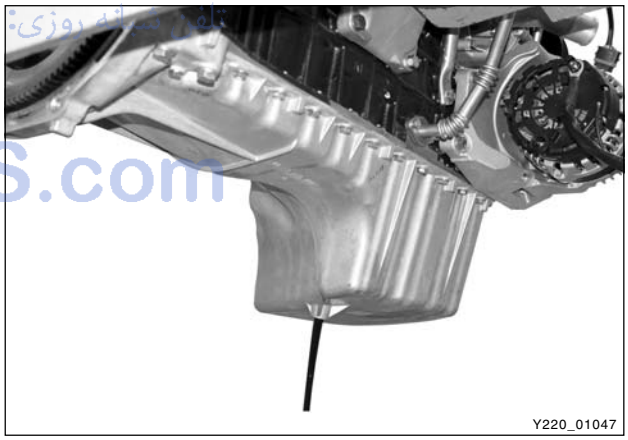

FarmaSOS.com

Accessories - Removal and Installation

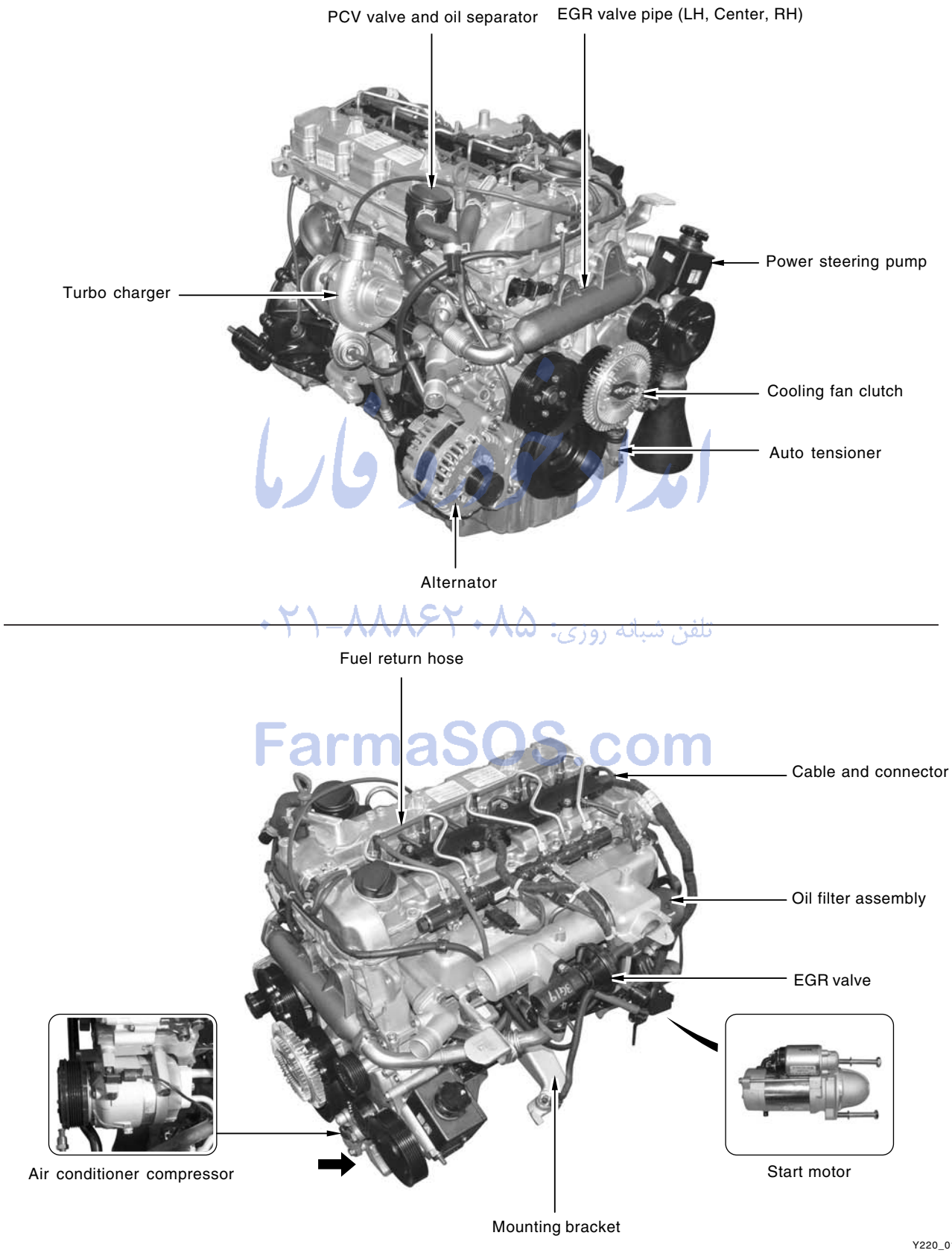

امداد خودرو فارما
تلفن شبانه روزی: ۰۲۱-۸۸۸۶۲۰۸۵
FarmaSOS.com

- The engine accessories can be removed without any specific order. In general, remove the components from top to bottom. However, be careful not to splash the lubricants to engine and body when disassembly. Especially, avoid getting into other components.

▶ Removal and Installation Order of Major Accessories

1. Vacuum Modulator
2. Engine Cables and Connectors
3. Fuel Hoses
3-1. EGR Valve Assembly
4. Oil Filter Assembly
4-1. Belt Tensioning Assembly
5. Power Steering Pump Assembly
6. Air Conditioner Compressor Assembly
7. PCV Valve Assembly + Oil Dipstick Tube
8. Turbo Charger → Alternator Assembly

* Camshaft Position Sensor
* Crankshaft Position Sensor
* Injector Fuel Line Connector
* Glow Plug Connector
* Fuel Return Hose
* High/Low Pressure Hoses in HP Pump
* Ground Cables
* Fuel Pressure Sensor Connector
* Booster Pressure Sensor Connector
* Knock Sensor Connector
* Coolant Temperature Sensor Connector
* HP Pump: Fuel Temperature Sensor (Green)
  IMV (Brown)

امداد خودرو فارما
تلفن شبانه روزی: ۰۲۱-۸۸۸۶۲۰۸۵
FarmaSOS.com

CHANGED BY	
EFFECTIVE DATE	
AFFECTED VIN	

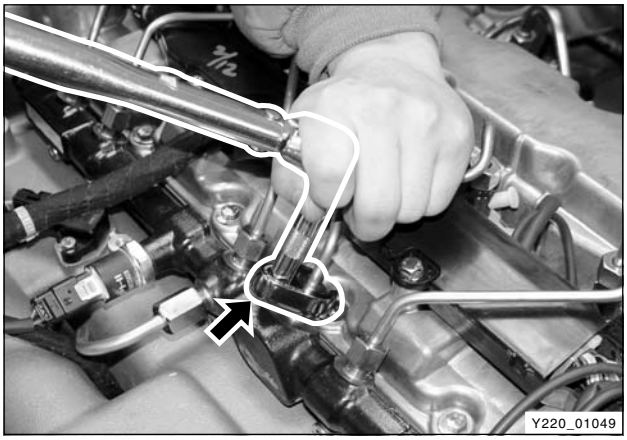

1. Remove the fuel pipes.
   A. Remove the fuel supply pipes between each cylinder and common rail with a special tool.

Installation Notice

Tightening torque	40 ± 4.0 Nm

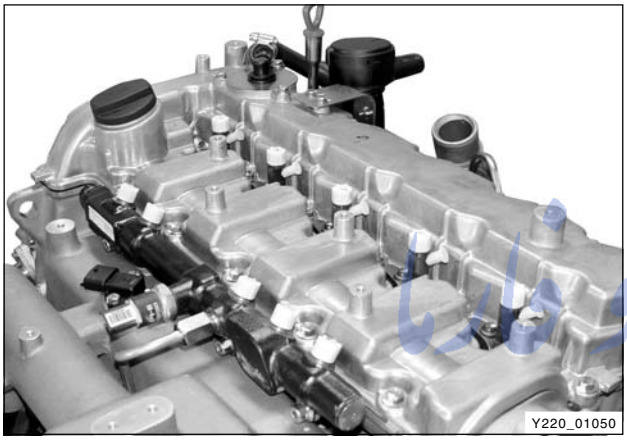

Notice

1. ***Plug the openings of injector nozzle and common rail with sealing caps after removed the fuel pipes.***

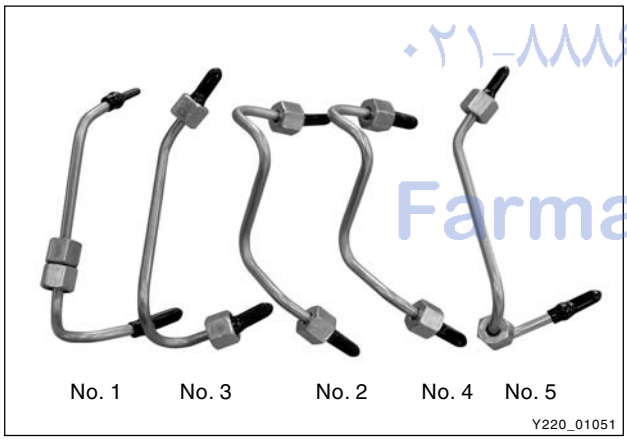

2. ***Replace the pipes with new ones. Be careful not to be mixed the fuel pipes because the pipe appearance of #1 and #3 cylinders and #2 and #4 are same each other.***

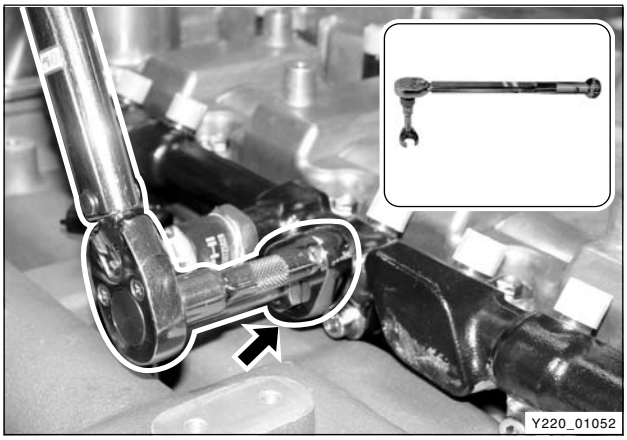

   B. Remove the high fuel pressure pipe mounting bolts with a special tool.
      - High fuel pressure supply pipe at common rail side

Installation Notice

Tightening torque	40 ± 4 Nm

امداد خودرو ما
۰۲۱-۸۸۸۶۲۰۸۵
FarmaSOS.com

C. High fuel pressure supply pipe at HP pump side

Installation Notice

Tightening torque	40 ± 4.0 Nm

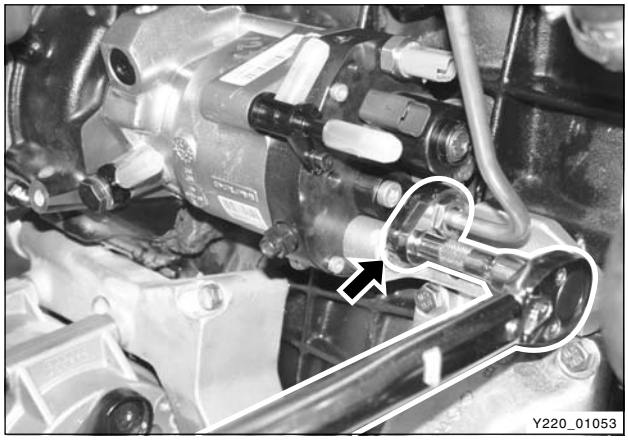

D. Unscrew the bracket mounting bolts and remove the high fuel pressure supply pipes.

Note

Special tool: Fuel pipe remover and installer



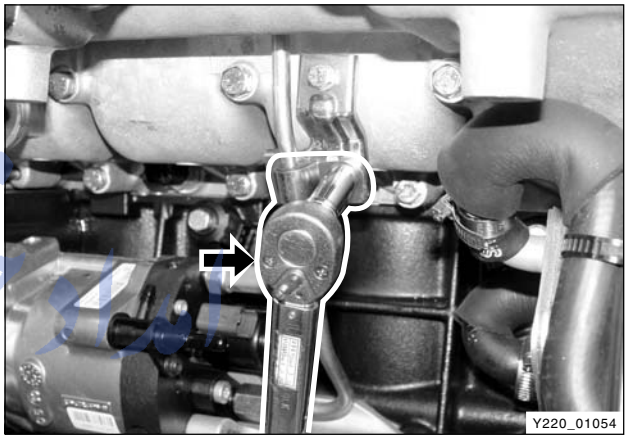

آسان خودرو فارما
تلفن شبانه روزی: ۰۲۱-۸۸۸۶۲۰۸۵
FarmaSOS.com

2. Disconnect the vacuum hoses and module cables from the vacuum modulator.

Notice

Put the installation marks on the modulator hoses and connectors.

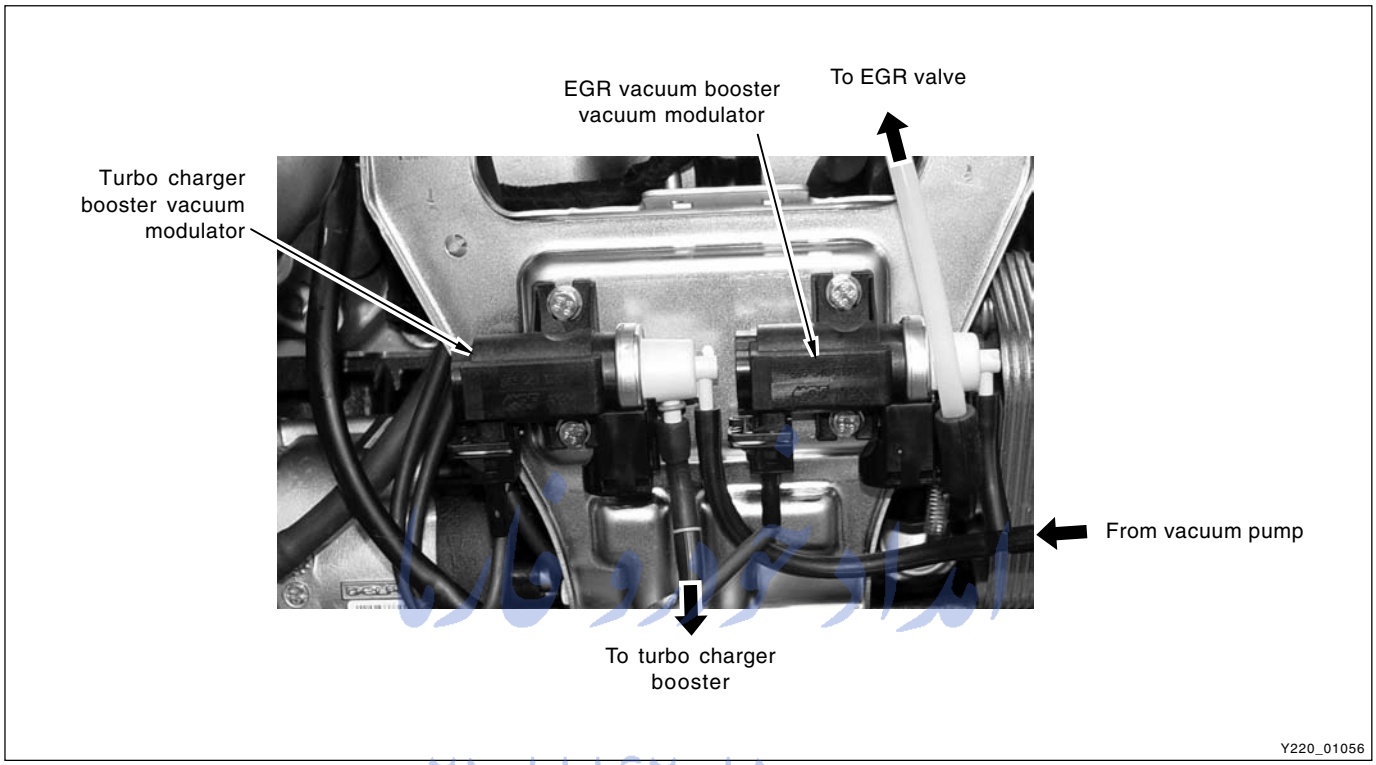

تلفن شبانه روزی: ۰۲۱-۸۸۸۶۲۰۸۵

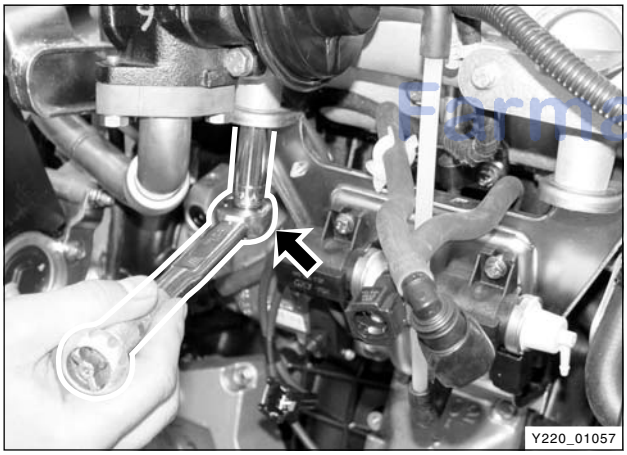

A. Remove the vacuum modulator bracket.
(Upper: 10 M x 2, Lower: 10M x 2)

Installation Notice

Upper bolt	25 ± 2.5 Nm
Lower bolt	25 ± 2.5 Nm

FarmaSOS.com

3. Disconnect the wiring harnesses and connectors from the engine.

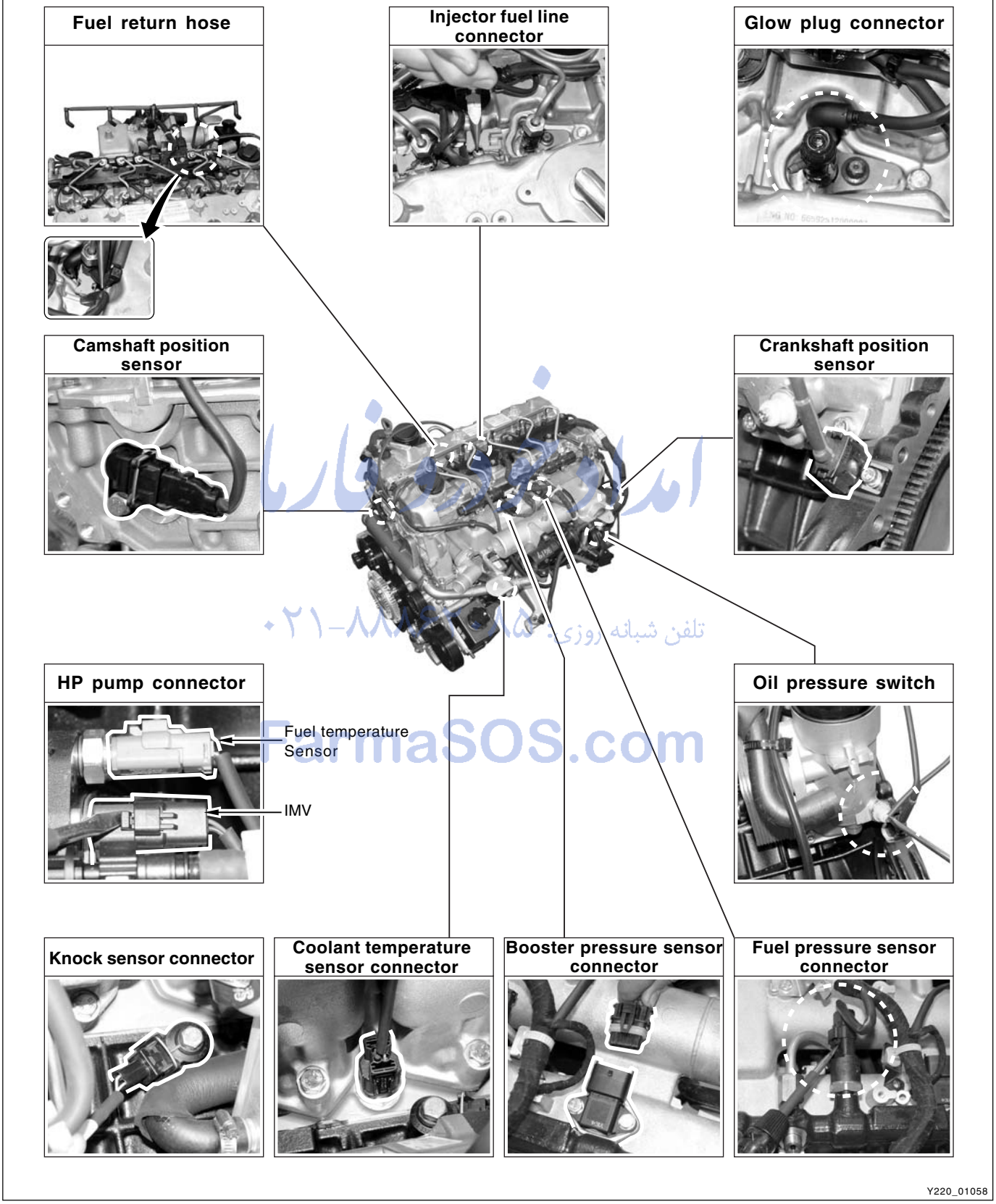

تلفن شبانه روزی: ۰۲۱-۸۸۸۴۹۸۵
FarmaSOS.com

CHANGED BY	
EFFECTIVE DATE	
AFFECTED VIN	

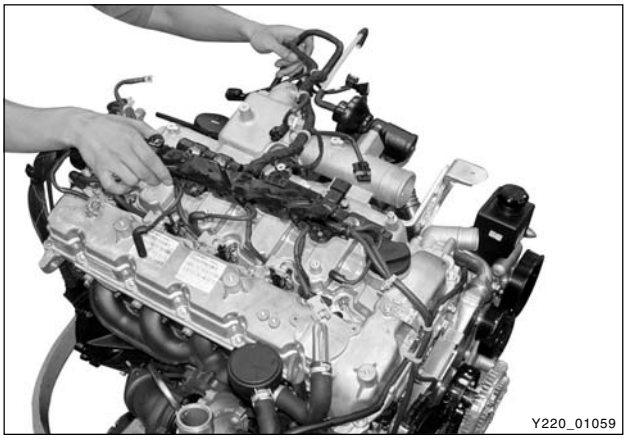
Y220_01059

A. Remove the cable assembly from the engine.

Important

1. ***If possible, remove the cables after removing the fuel pipes. It make the operation easier and protect the cables and connectors.***


Y220_01060

2. ***Remove the cable screws and ground cable, and then remove the engine cable assembly.***

Notice

- ***Be careful not to damage the HP pump connecting pipe (venturi) while removing the fuel hose from the HP pump.***

امداد خودرو فرانسا
۰۲۱-۸۸۸۶۲۰۸۵ تلفن شبانه روزی
FarmaSOS.com

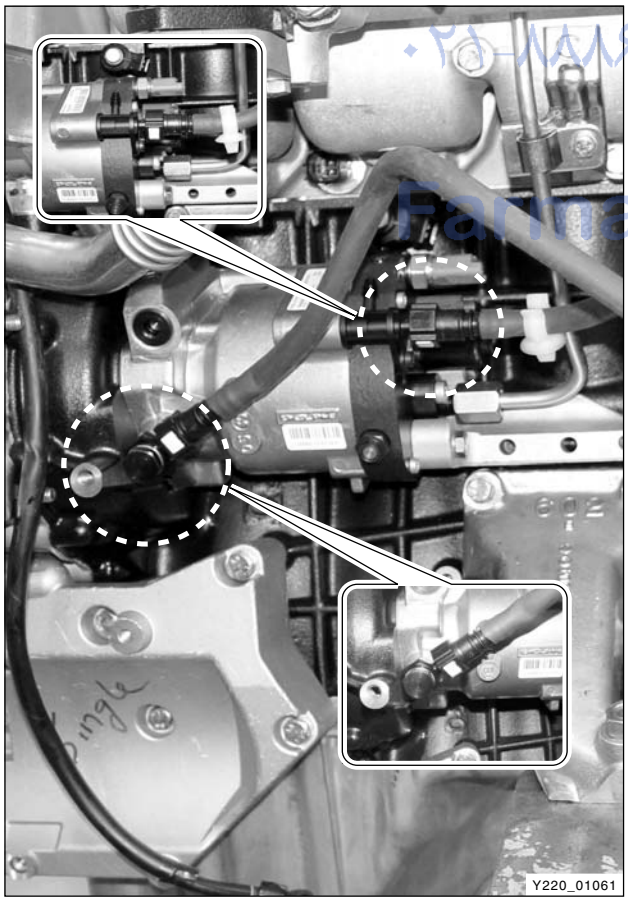
Y220_01061

4. Disconnect the high and low fuel pressure hoses from the HP pump.

Notice

- ***Be careful not to damage the hose connections.***
- ***Plug the openings in HP pump immediately after disconnecting the hoses.***

5. Remove the EGR valve and EGR valve pipe.
   A. Disconnect the vacuum hose from the EGR valve.
   B. Unscrew the EGR valve bolts and EGR #1 pipe connecting bolts and remove the EGR valve and steel gasket.

Installation Notice

EGR valve bolt	25 ± 2.5 Nm
EGR valve and center pipe bolt	25 ± 2.5 Nm

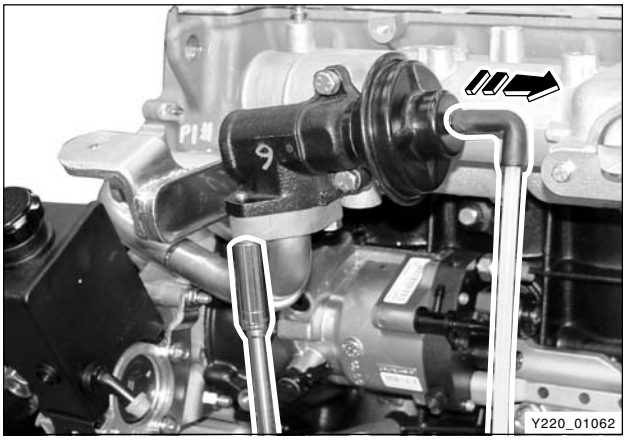

   C. Remove the EGR valve #1 pipe.

Installation Notice

Center pipe bolt	35 ± 3.5 Nm
Center pipe and #1 pipe bolt and nut	35 ± 3.5 Nm

Notice

The EGR #2 pipe should be replaced with new one.

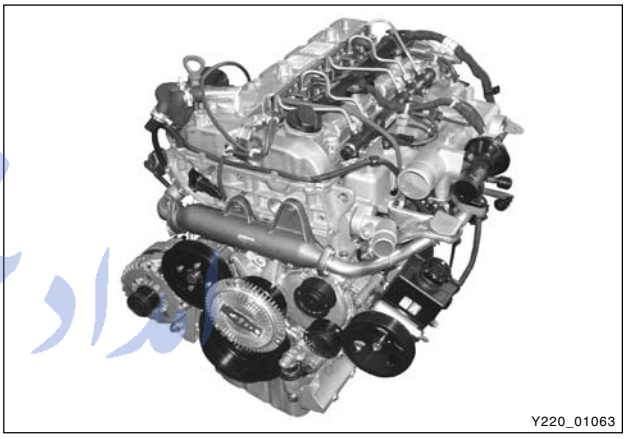

   D. Unscrew the EGR valve #3 pipe (2) mounting bolts and remove the pipe from the exhaust manifold.

Installation Notice

Tightening torque	35 ± 3.5 Nm

Notice

1. ***The EGR #3 pipe should be replaced with new one.***
2. ***Make sure that the convex surface of new steel gasket is facing to the bolts.***

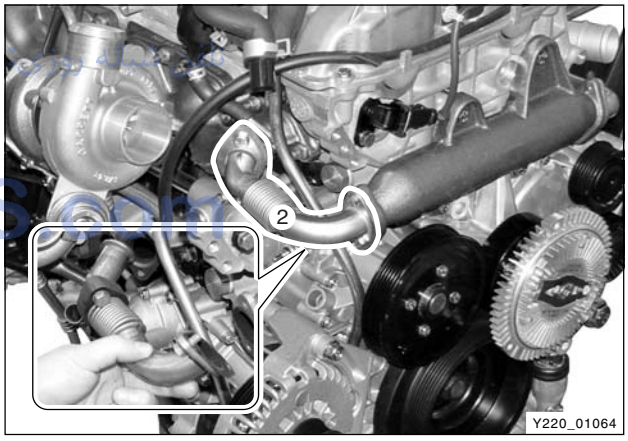

6. Remove the oil filter assembly.
   A. Remove the oil cooler hose.

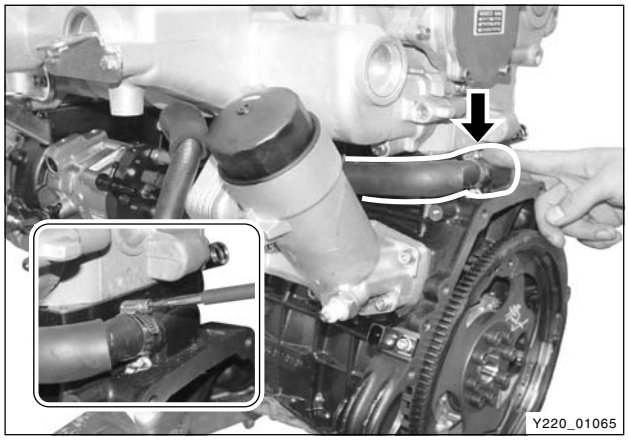

FarmaSOS.com

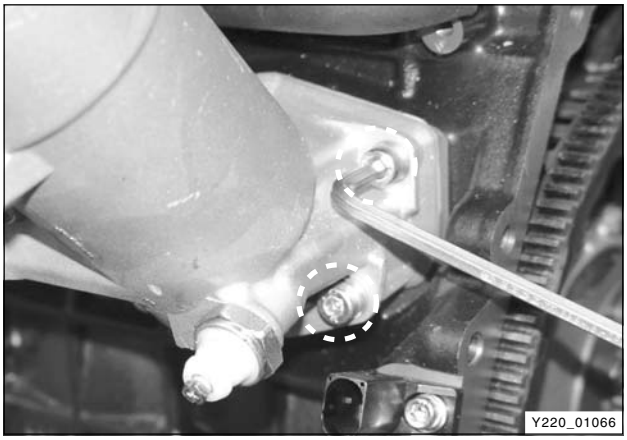

B. Remove the oil filter assembly mounting bolts.

Notice

Be careful not to flow out the residual oil from the engine. If flown out, immediately wipe it out.

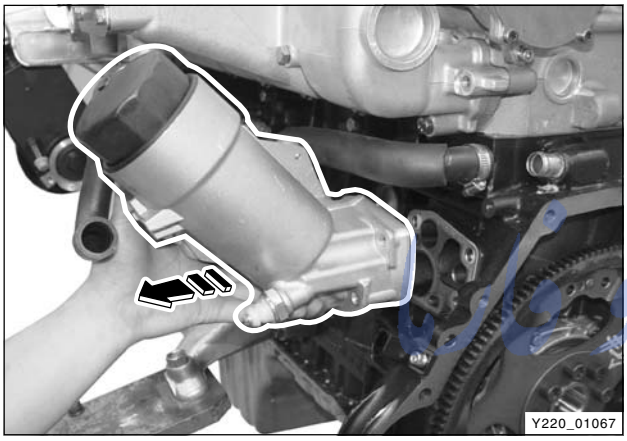

C. Remove the oil filter assembly from the cylinder block.

Installation Notice

- Replace the oil filter gasket with new one.

Tightening torque	25 ± 2.5 Nm

امداد خودرو
۰۲۱-۸۸۸۶۲۰۸۵
FarmaSOS.com

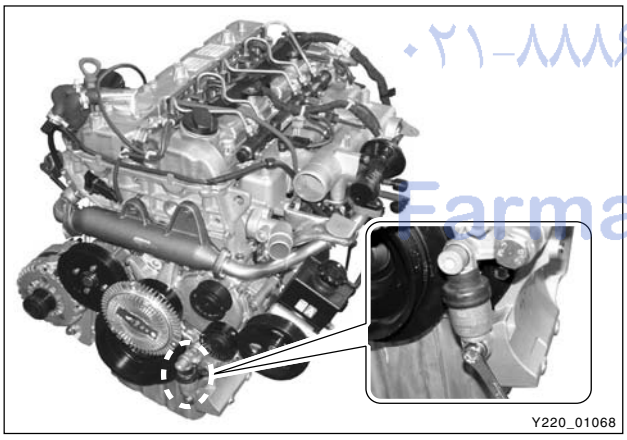

7. Remove the belt tensioning device.

A. Remove the shock absorber lower mounting bolt.

Installation Notice

Tightening torque	32 ± 3 Nm

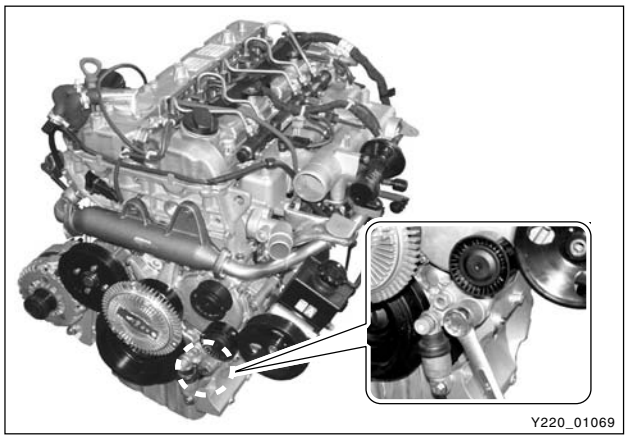

B. Remove the shock absorber upper mounting bolt.

Installation Notice

Tightening torque	82 ± 6 Nm

C. Remove the belt tensioning device.

Notice

- ***To prevent the oil leaks, store the removed shock absorber assembly with standing up.***
- ***For air bleeding, pump the shock absorber around 3 times after installation.***
- ***Be careful not to damage the rubber parts of the shock absorber when removing.***
- ***To prevent the oil leaks, remove the bolts from bottom to top section. On the contrary, when installing, tighten the bolts from top to bottom section.***

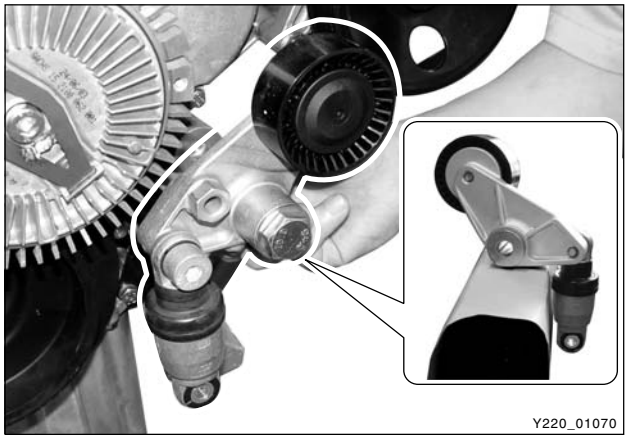
Y220_01070

7. Remove the power steering pump assembly.

A. Remove the power steering pump mounting bolts.

Installation Notice

Tightening torque	25 ± 2.5 Nm

Notice

Be careful not to flow out the oil.


Y220_01071

B. Remove the power steering pump assembly from the engine.

Notice

To prevent the oil leaks, store the removed power steering pump assembly with standing up.

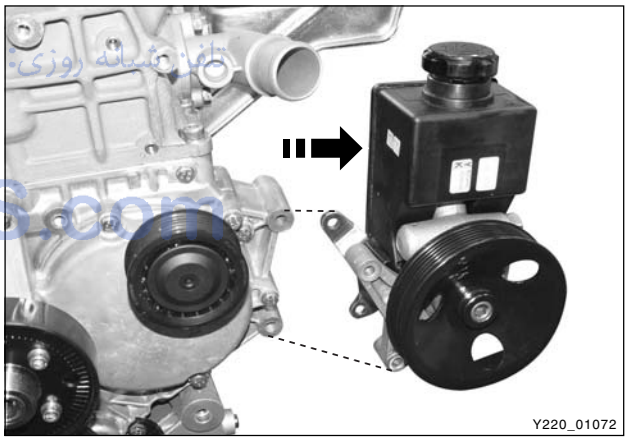
Y220_01072

8. Remove the air conditioner compressor assembly.

A. Unscrew the bolts and remove the air conditioner compressor assembly.

Installation Notice

Tightening torque	25 ± 2.5 Nm

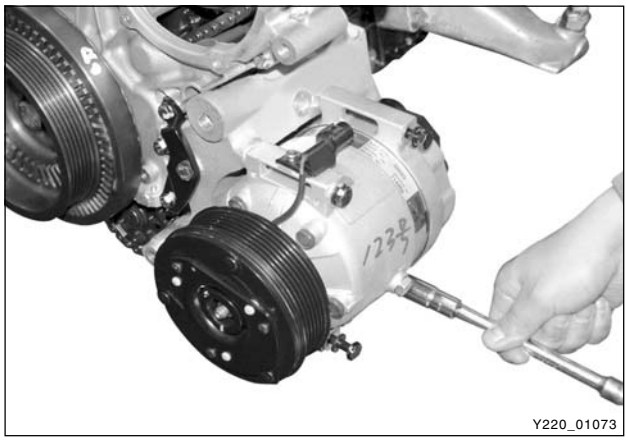
Y220_01073

امداد خودرو فارما
۰۲۱-۸۸۸۶۲۰۸۵ تلفن شبانه روزی
FarmaSOS.com

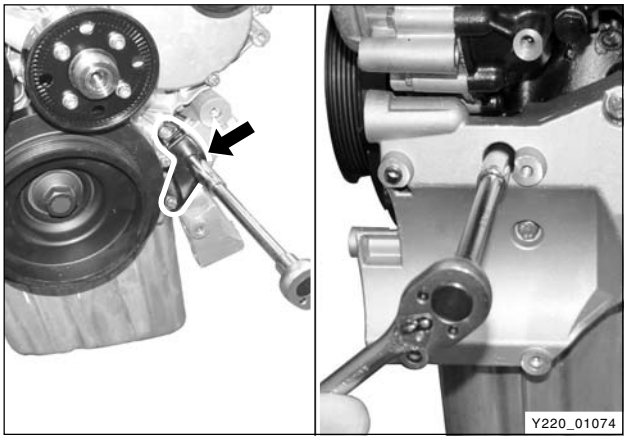

B. Unscrew the bolts and remove the air conditioner mounting bracket.

Installation Notice

Front bolt	25 ± 2.5 Nm
Side bolt	25 ± 2.5 Nm

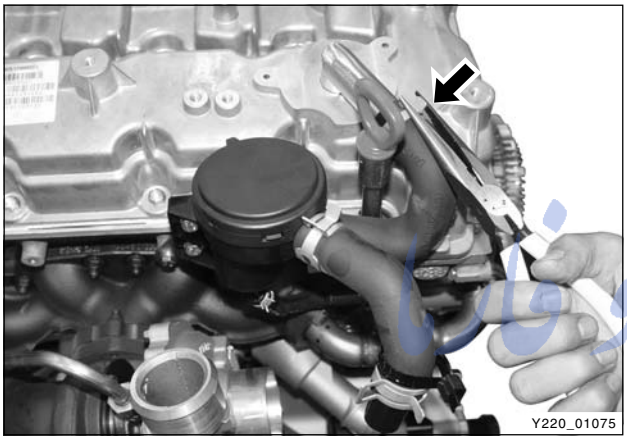

9. Remove the PCV valve assembly.

A. Remove the PCV valve hose.

امداد خودرو
۰۲۱-۸۸۸۶۲۰۸۵ تلفن شبانه روزی
FarmaSOS.com

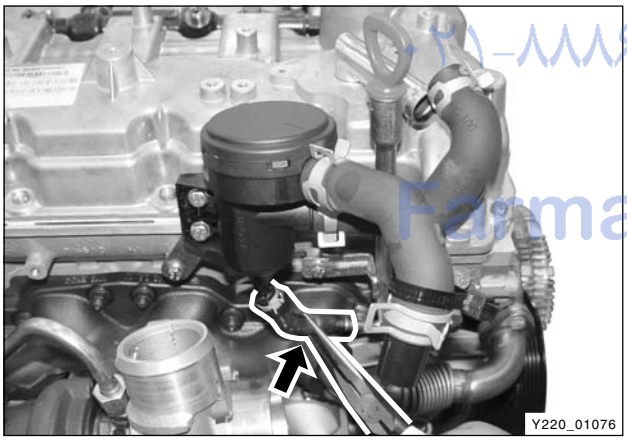

B. Remove the PCV valve hose connected to the engine oil hose.

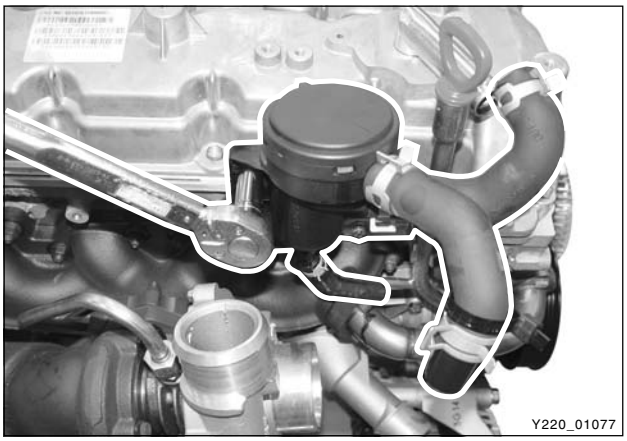

C. Unscrew the PCV valve mounting bolts and remove the PCV valve assembly.

Installation Notice

Tightening torque	10 ± 1.0 Nm

10. Remove the oil dipstick tube assembly.

Unscrew the bracket bolts and remove the dipstick tube with O-ring.

Installation Notice

Insert new O-ring into the oil dipstick tube before installation.

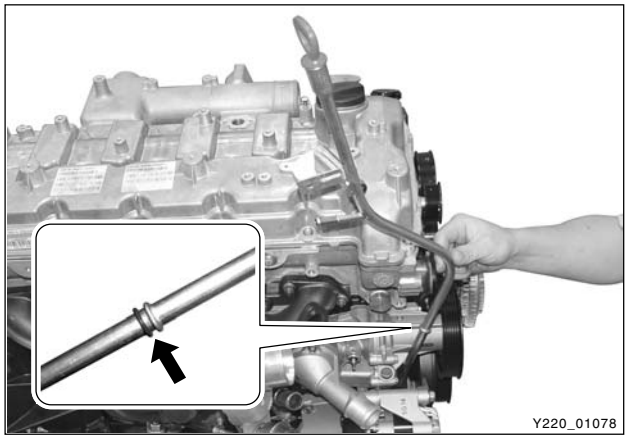

Installation Notice

Tightening torque	10 ± 1.0 Nm

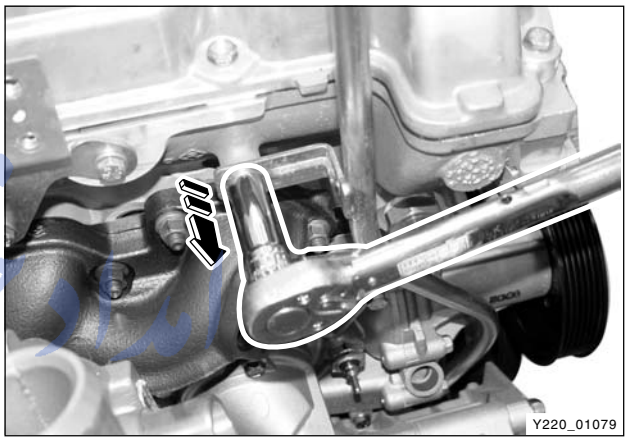

11. Remove the turbo charger assembly.

A. Unscrew the bolts and remove the oil supply pipe.

Installation Notice

Upper bolt (M19)	25 ± 2.5 Nm
Lower bolt (M17)	20 ± 2.0 Nm

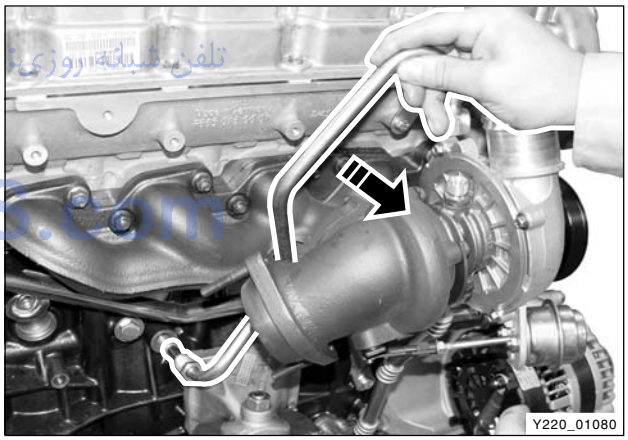

B. Unscrew the bolts and remove the oil return pipe.

Installation Notice

- Make sure to install the gasket with correct direction.

Tightening torque	10 ± 1.0 Nm

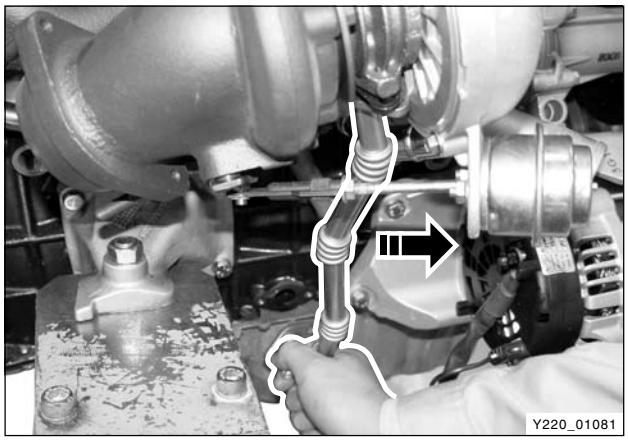

امداد خودرو فارما
تلفن شبانه روزی: ۰۲۱-۸۸۸۴۲۰۸۵
FarmaSOS.com

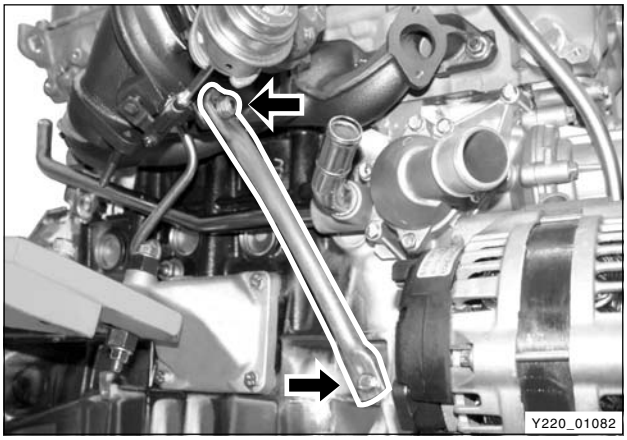

C. Unscrew the turbo charger mounting bracket bolts.

Installation Notice

Tightening torque	25 ± 2.5 Nm

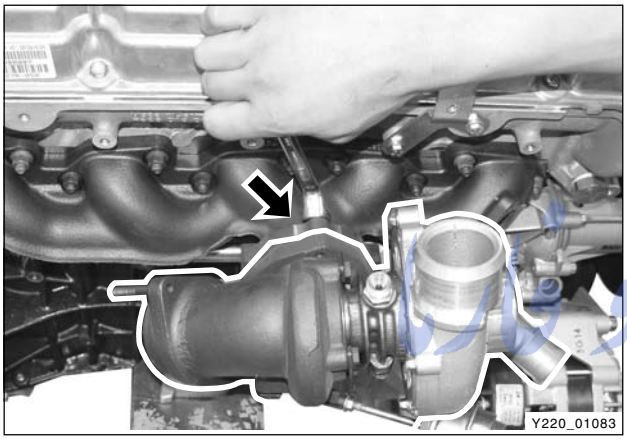

D. Unscrew the turbo charger mounting bolts to exhaust manifold.

Notice

Use only 12 1/2 wrench.

Installation Notice

Tightening torque	25 ± 2.5 Nm

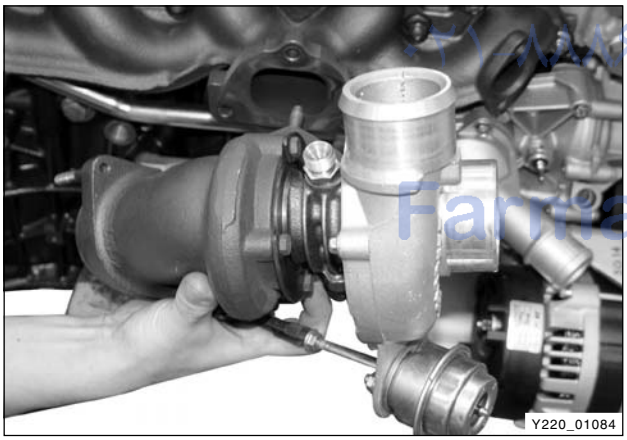

E. Remove the turbo charger assembly.

امداد خودرو ایران
تلفن شبانه روزی: ۰۲۱-۸۸۴۶۲۰۸۵
FarnaSOS.com

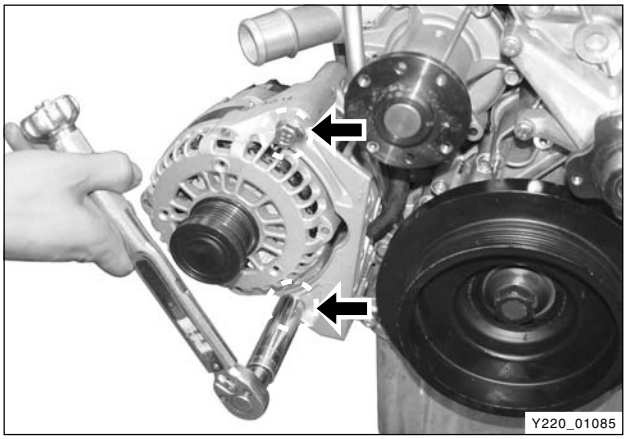

12. Remove the alternator assembly.
    A. Unscrew the bolts and remove the alternator.

Note

Alternator Capacity: 140 A

Installation Notice

Tightening torque	46 ± 4.6 Nm

B. Remove the alternator mounting bracket.

Installation Notice

M13 bolt	25 ± 2.5 Nm
Torx 6 bolt	25 ± 2.5 Nm

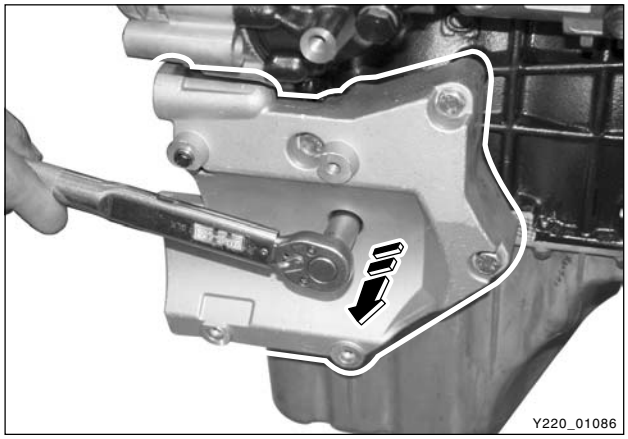

امداد خودرو فارما
تلفن شبانه روزی: ۰۲۱-۸۸۸۶۲۰۸۵
FarmaSOS.com

Engine - Disassembly and Reassembly

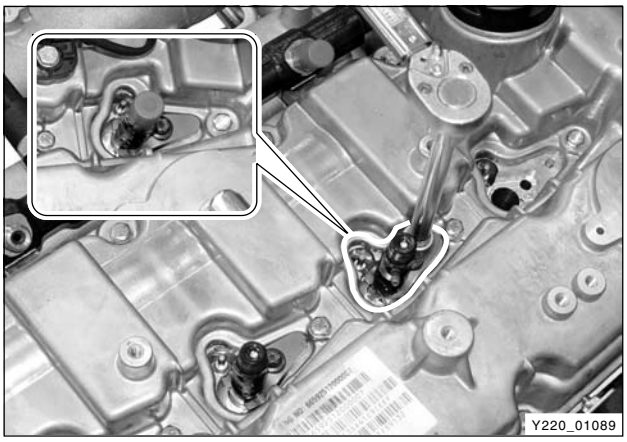

1. Unscrew the injector nozzle holder bolts (12-sided) and remove the injector bracket.

   Installation Notice

Tightening torque	9 ± 1.0 Nm, 190° + 10°

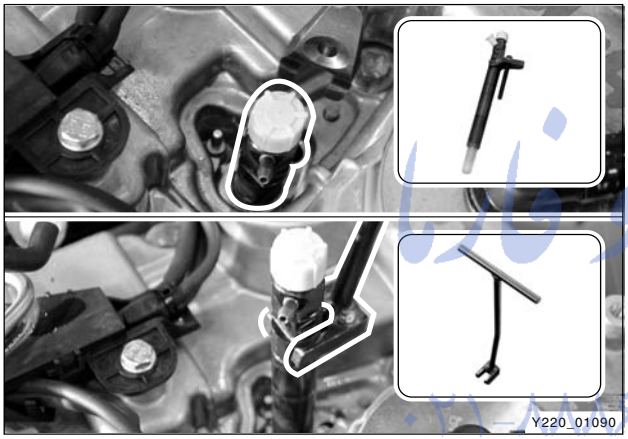

2. Remove the injectors with a injector extractor (special tool).

   Notice

   - ***Be careful not to take off the sealing caps on the injectors and fuel system.***
   - ***Replace the copper washers with new ones when installing.***

تلفن شبانه روزی: ۰۲۱-۸۸۶۲۰۸۵

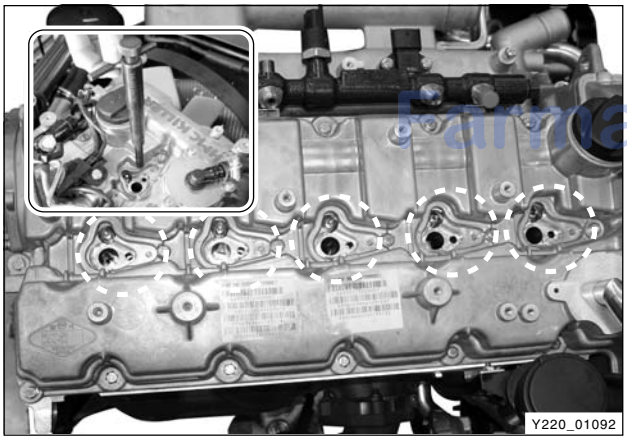

3. If the copper washer is in injector hole, remove it with a special tool as shown in the figure.

PajmaSOS.com

4. Remove the glow plugs with a special tool.

Installation Notice

Tightening torque	15 ± 3 Nm

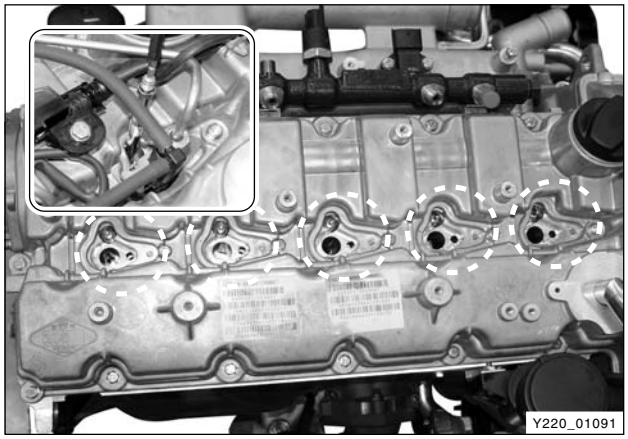

5. Unscrew the Torx bolts and remove the common rail from the engine.

Installation Notice

Tightening torque	25 ± 2.5 Nm

Notice

Plug the openings with sealing cap.

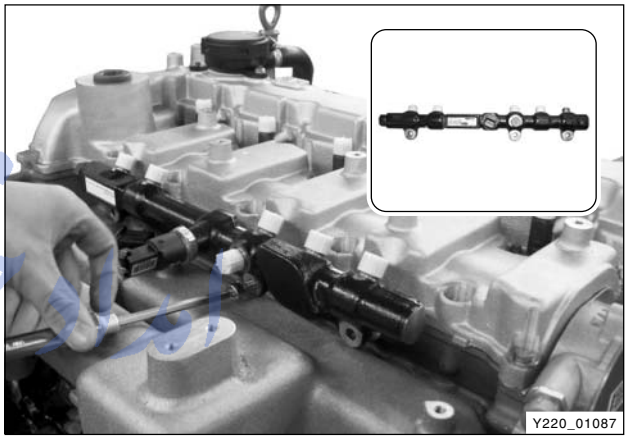

6. Remove the booster sensor from the engine.

Installation Notice

Tightening torque	10 ± 1.0 Nm

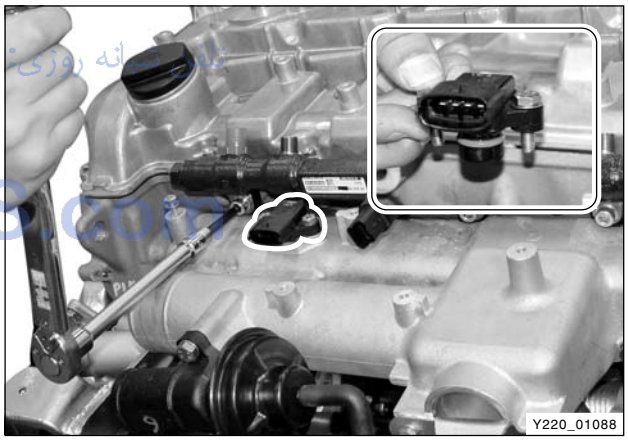

7. Unscrew the bolt and remove the camshaft position sensor.

Installation Notice

Tightening torque	12 ± 1.7 Nm

- Apply Loctite on the thread before installation.

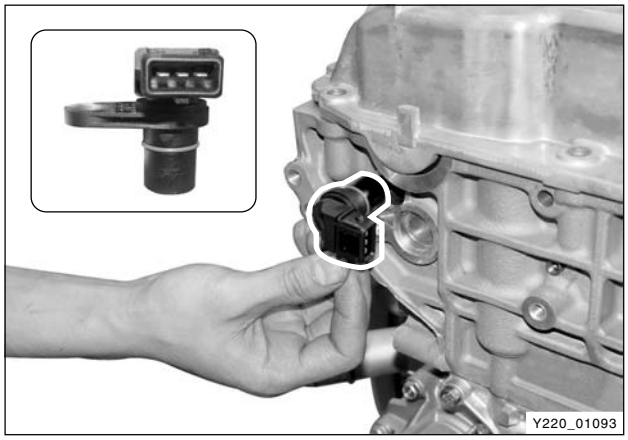

امداد خودرو فارما
۰۲۱-۸۸۸۶۲۰۸۵ پاسخگوی شبانه روزی
FarmaSOS.com

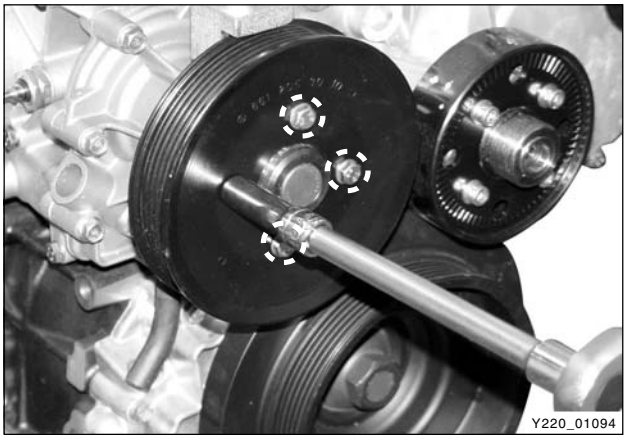

8. Unscrew the bolts and remove the cooling fan pulley while holding it with a special tool.

Tightening torque	10 ± 1.0 Nm

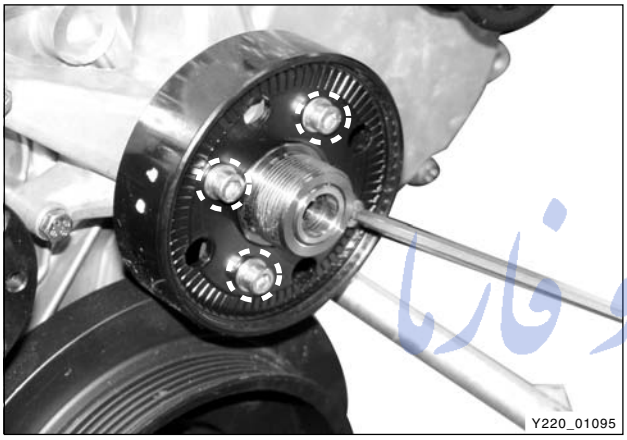

9. Remove the cooling fan belt idle pulley while holding it with a special tool.

Tightening torque	10 ± 1.0 Nm

امداد خودرو فارما
FarmaSOS.com

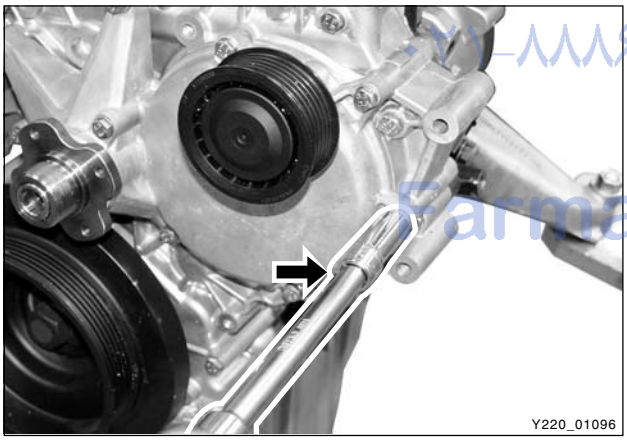

10. Unscrew the bolts and remove the cooling fan bracket assembly (timing chain cover).

Tightening torque	10 ± 1.0 Nm

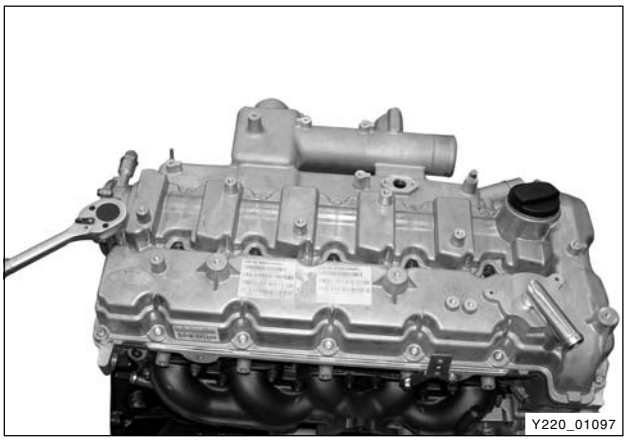

11. Unscrew the bolts and remove the cylinder head cover.

Tightening torque	10 ± 1.0 Nm

12. Turn over the engine and remove the oil pan.

Installation Notice

Tightening torque	Nm
M6 x 20: 24 EA	10 ± 1.0
M6 x 35: 2 EA	10 ± 1.0
M6 x 85: 2 EA	10 ± 1.0
M8 x 40: 4 EA	25 ± 2.5

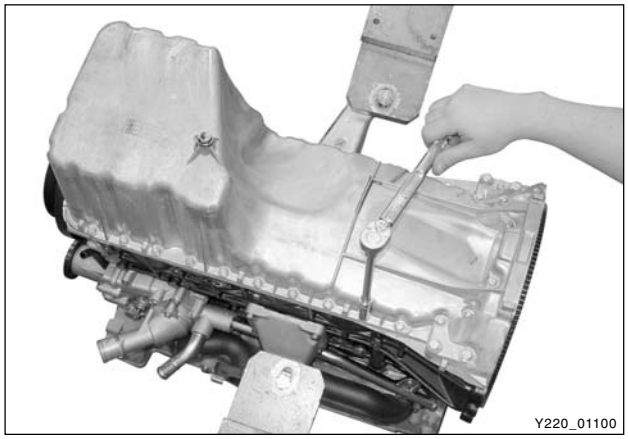

Installation Notice

Remove the oil seal residues from the oil pan and apply the liquid gasket on the parting surface.

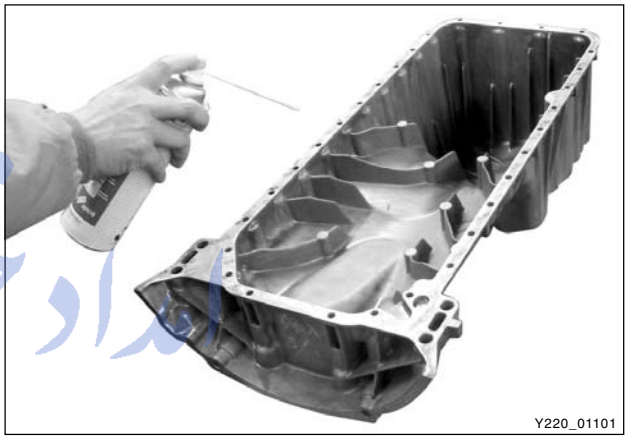

13. Unscrew the nuts and remove the exhaust manifold.

Installation Notice

Tightening torque	40 ± 4.0 Nm

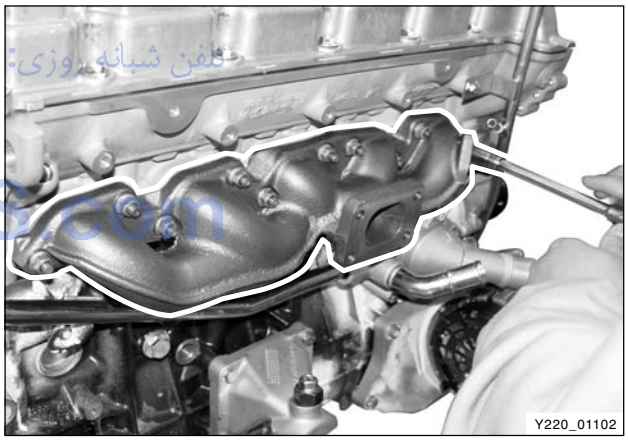

Notice

The exhaust manifold gasket is removed along with the exhaust manifold. Mark the installation direction to prevent wrong installation. Otherwise, it may cause a sealing trouble.

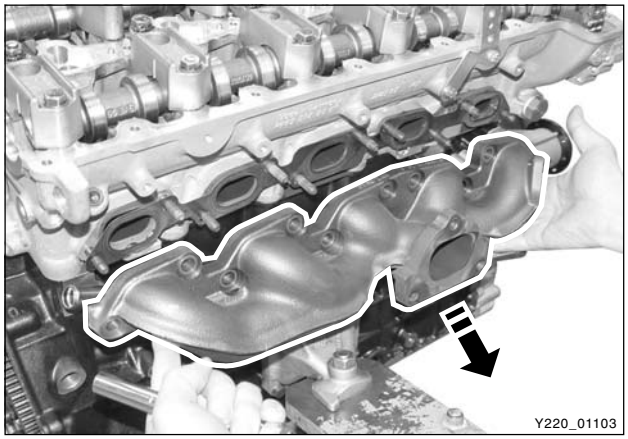

امداد خودرو فارما
تلفن شبانه روزی: ۰۲۱-۸۸۸۶۲۰۸۵
FarmaSOS.com

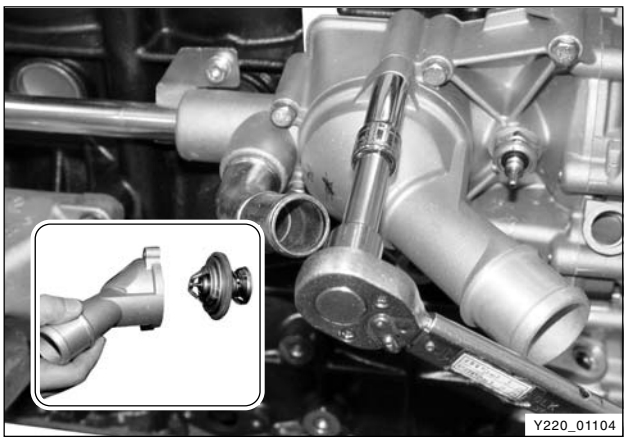
Y220_01104

14. Unscrew the bolts and remove the thermostat.

Installation Notice

Tightening torque	10 ± 1.0 Nm

Notice

Be careful not to flow out the residual coolant.

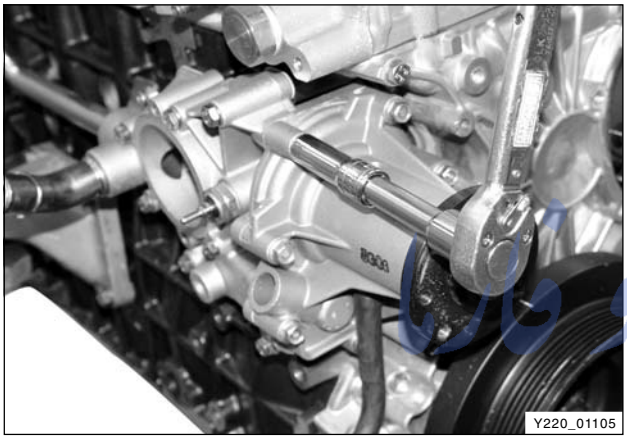
Y220_01105

15. Unscrew the bolts and remove the water pump.

Installation Notice

Tightening torque	10 ± 1.0 Nm

امداد خودرو فارما
۰۲۱-۸۸۸۶۲۰۸۸ تلفن شبانه روزی
FarmaSOS.com

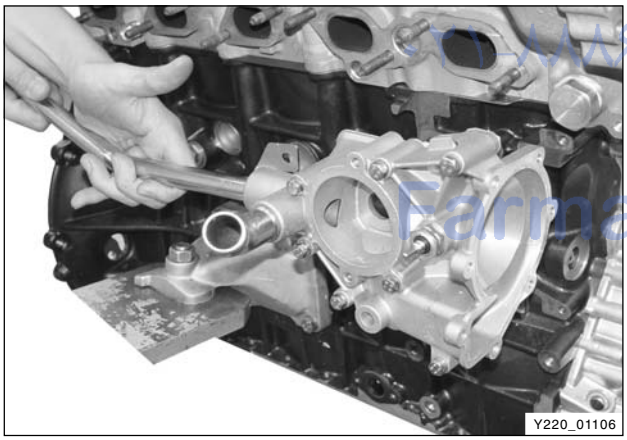
Y220_01106

16. Unscrew the bolts and remove the water pump housing.

Installation Notice

Tightening torque	10 ± 1.0 Nm

Notice

Be careful not to flow out the residual coolant.

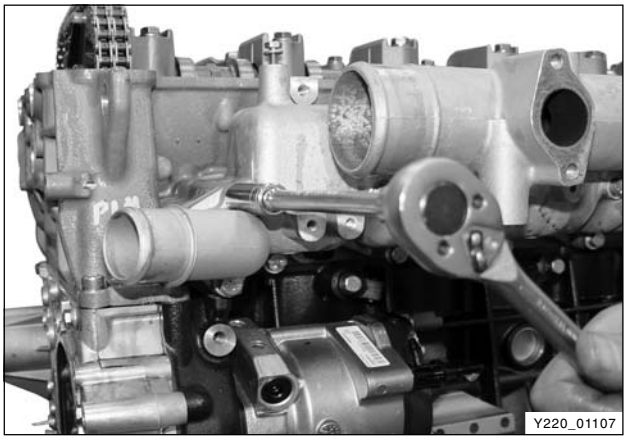
Y220_01107

17. Unscrew the bolts and remove the coolant inlet port from the intake manifold.

Installation Notice

Tightening torque	25 ± 2.5 Nm

Notice

Be careful not to get the coolant into the intake manifold and engine.

18. Unscrew the bolts and remove the intake manifold assembly.

Installation Notice

Tightening torque	25 ± 2.5 Nm

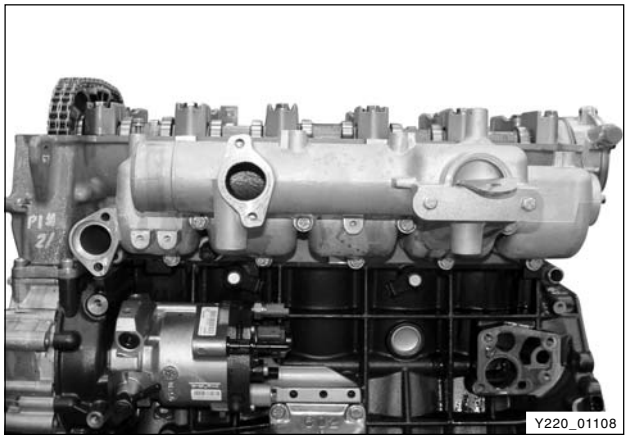

Notice

Replace the gasket with new one once removed.

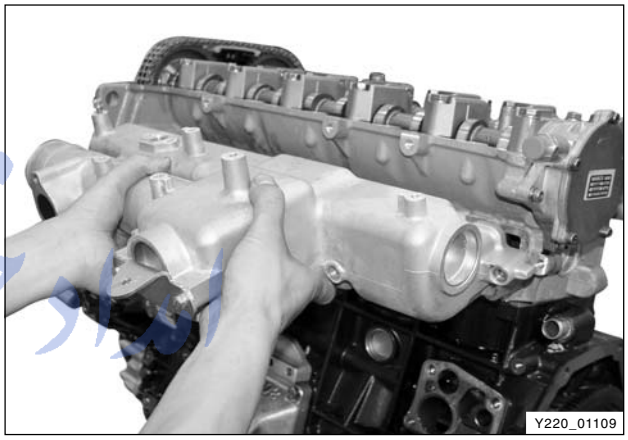

19. Remove the vacuum pump from the cylinder head.

Installation Notice

Tightening torque	10 ± 1.0 Nm

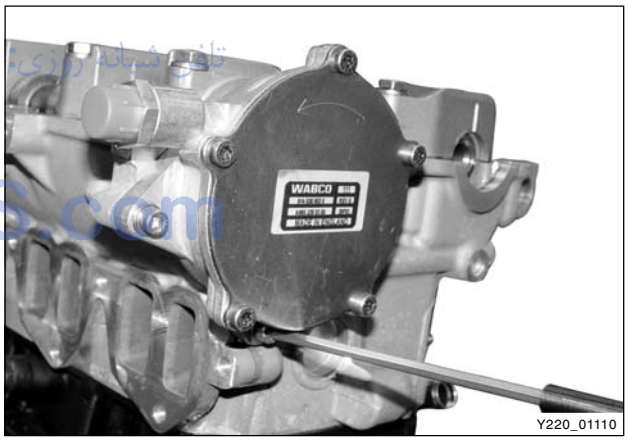

20. Install the engine lock (special tool) onto the flywheel ring gear so that the engine will not rotate.



ایساد خودرو فارما
۰۲۱-۸۸۸۶۲۰۸۵ تلفن شبانه روزی
FarmaSOS.com

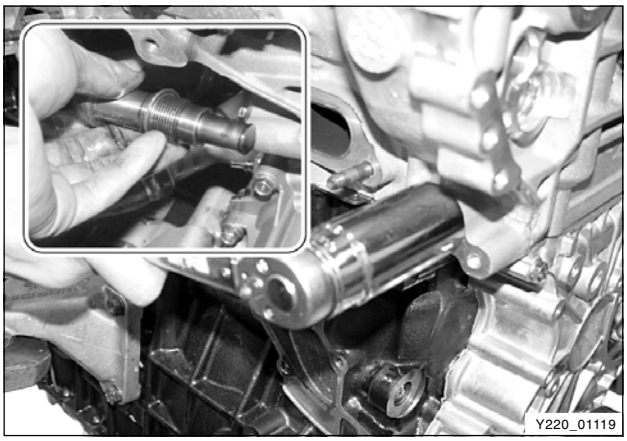

21. Remove the chain tensioner.

※ Preceding works: removal of EGR pipe and oil dipstick tube

Tightening torque	65 ± 5.0 Nm

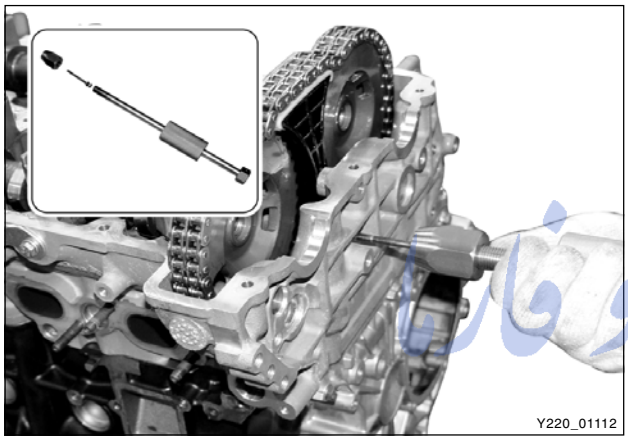

22. Pull out the lock pin and remove the upper chain guide bracket.

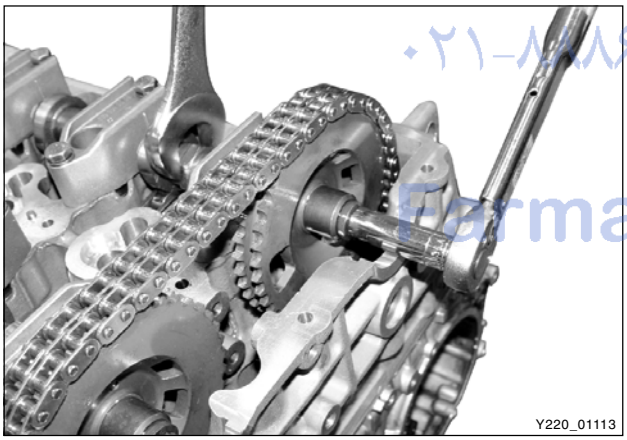

23. Unscrew the bolt and remove the intake camshaft sprocket.

Installation Notice

Tightening torque	25 ± 2.5 Nm, 90° + 10°

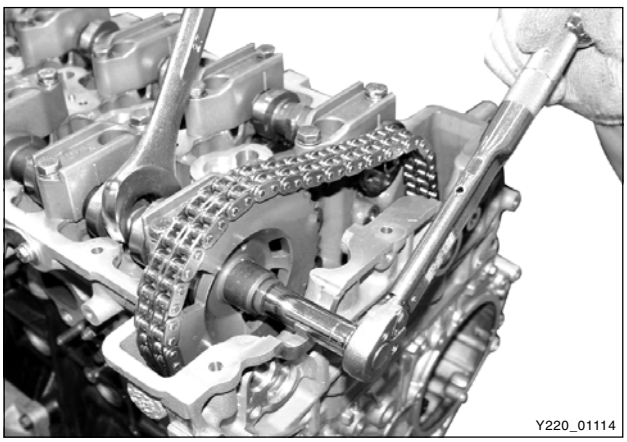

24. Unscrew the bolt and remove the exhaust camshaft sprocket.

Installation Notice

Tightening torque	25 ± 2.5 Nm, 90° + 10°

امداد خودرو فارما
۰۲۱-۸۸۸۶۲۰۸۸ تلفن شبانه روزی
FarmaSOS.com

25. Remove the camshaft bearing cap bolts so that the tightening force can be relieved evenly.
    - Intake: #1, #3, #6
    - Exhaust: #7, #9, #12

    * However, there is no specific removal sequence.

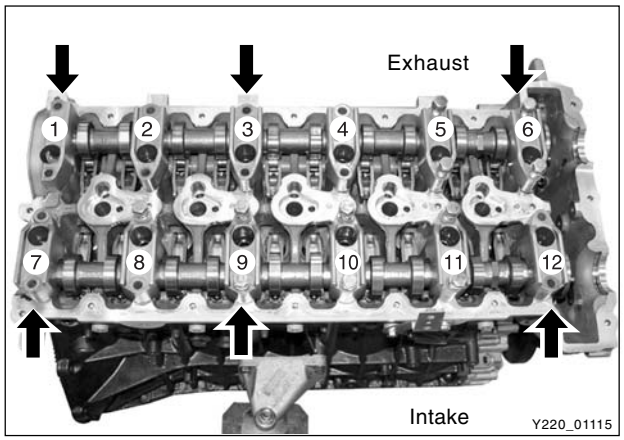

    - Intake: #2, #4, #5
    - Exhaust: #8, #10, #11

    * Do not remove the bolts at a time completely. Remove them step by step evenly or camshaft can be seriously damaged.

Installation Notice

Tightening torque	25 ± 2.5 Nm

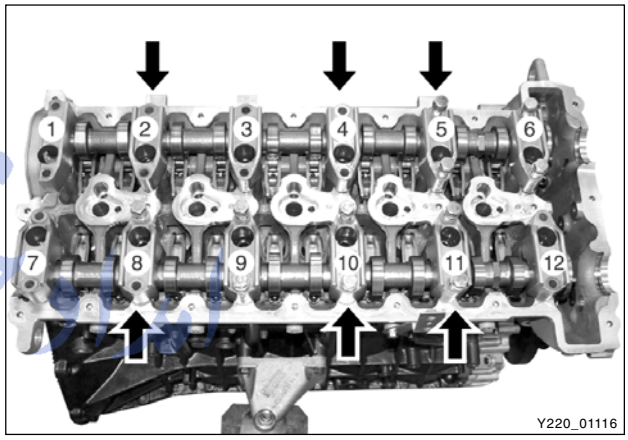

26. Remove the intake and exhaust camshafts from the cylinder head.

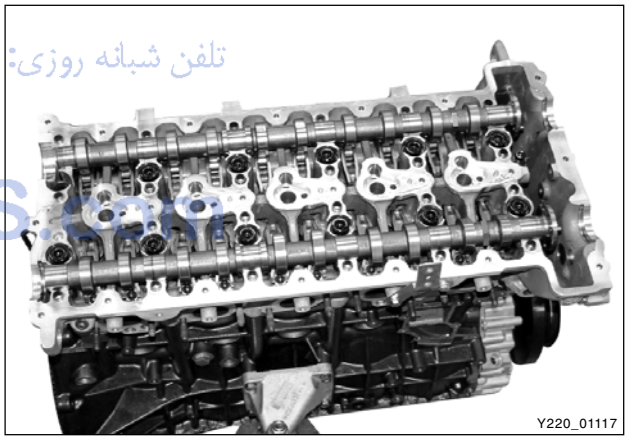

27. Remove the finger follower and the HLA device.

Notice

- ***Avoid contact with hot metal parts when removing the HLA device immediately after stopping the engine.***
- ***Be careful not to be contaminated by foreign materials.***
- ***To prevent the oil leaks, store the removed finger follower and HLA device with standing up.***
- ***If the HLA can be easily pressed in by hand, it indicates the oil inside of HLA has been flown out. In this case, replace it with new one.***

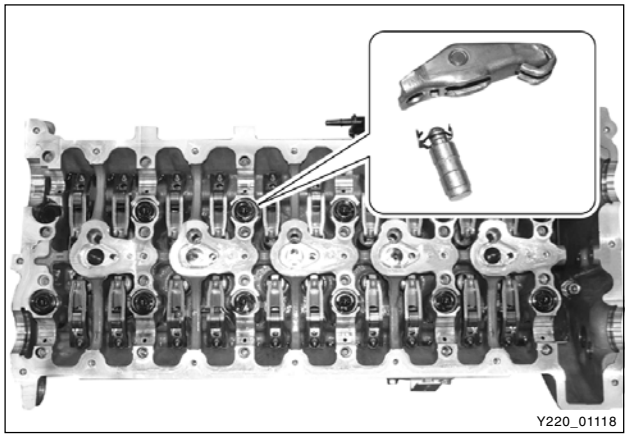

FarmaSOS.com
تلفن شبانه روزی: ۰۲۱-۸۸۸۶۲۰۸۵

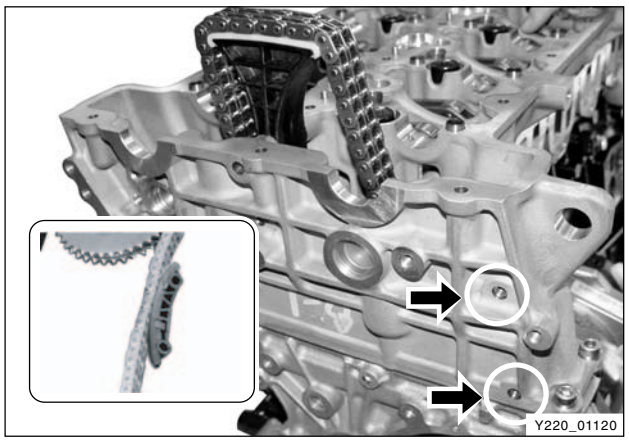

28. Pull out the pin and remove the timing chain guide from the engine.

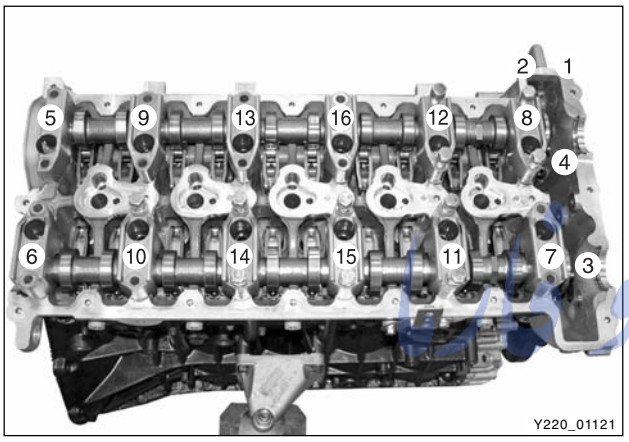

29. Remove the cylinder head bolts according to the numerical sequence.

Installation Notice

Tightening torque	Nm
M8 x 25: 2 EA	25 ± 2.5
M8 x 50: 2 EA	25 ± 2.5
M12 x 177: 11 EA	85 ± 5 Nm, 3 x 90° + 10°
M12 x 158: 1 EA (Vacuum pump side)	

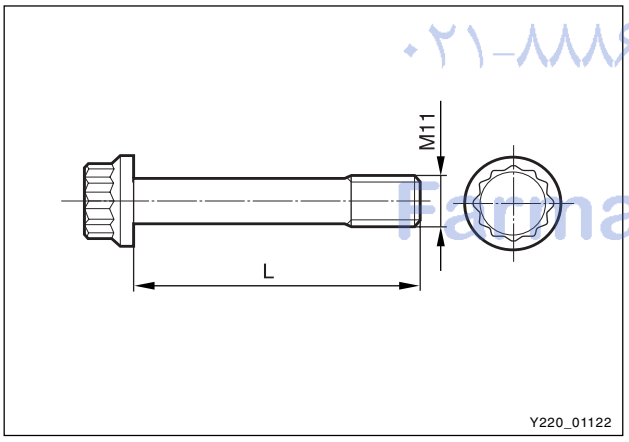

30. Measure the length of cylinder head bolts.
    - If the maximum length is exceeded by 2 mm, replace the cylinder head bolt.

Length when new	Maximum Limit
177 mm	179 mm
158 mm	160 mm

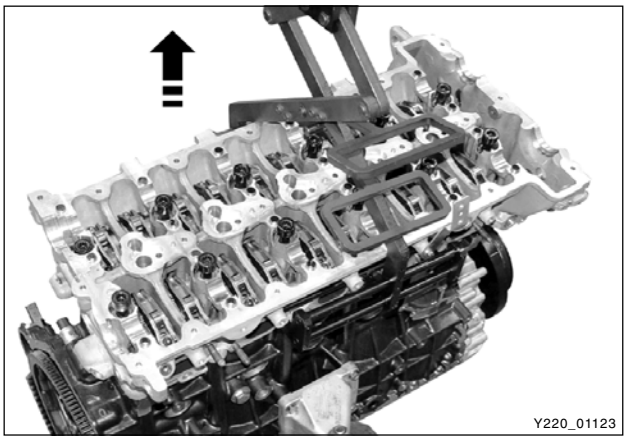

31. Remove the cylinder head.

Notice

- ***Inspect the cylinder head surface.***
- ***Store the removed injectors and glow plugs so that they will not be damaged.***

FarmaSOS.com

32. Measure the piston protrusion from the parting surface.
    - Specified Value: 0.765 ~ 1.055 mm

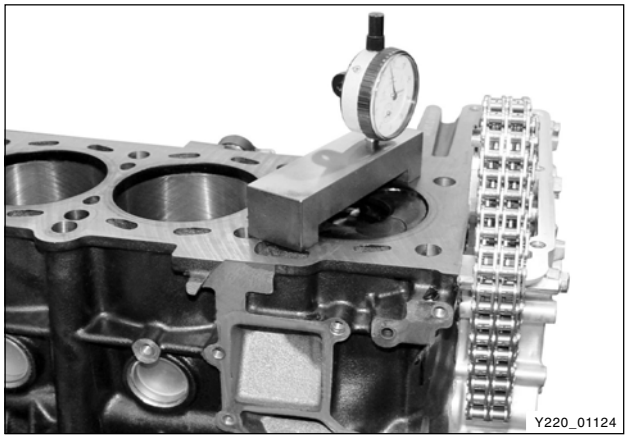

33. Remove the cylinder head gasket.

Installation Notice

- ***Replace the cylinder head gasket with new one. Make sure to place the "TOP" mark upward.***

1. ***Put the steel gasket on the cylinder block and position the cylinder head.***

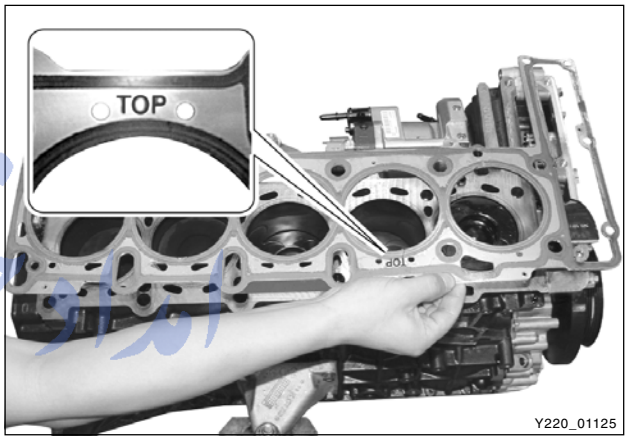

2. ***Tighten the cylinder head bolts to specified torque and torque angle.***

Tightening torque	Step 1	20 ± 2.0 Nm
	Step 2	85 ± 5.0 Nm
	Step 3	90 ± (3 times) + 10°

- ***Apply the oil on the bolt thread when installing.***
- ***Always insert new washer first.***
- ***The bolts (12) at vacuum pump side are shorter than others.***

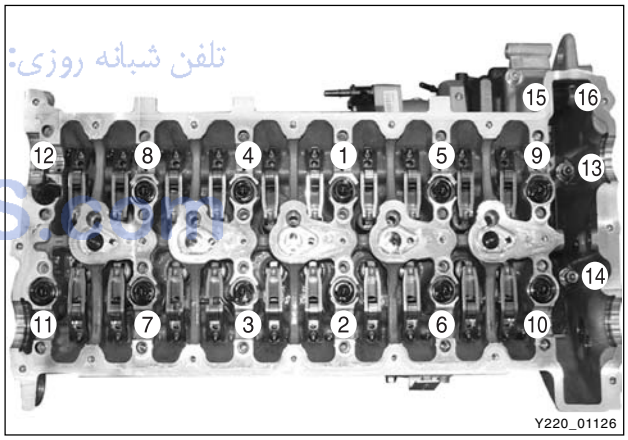

34. Turn over the engine and remove the baffle plate.

Installation Notice

Tightening torque	10 ± 1.0 Nm

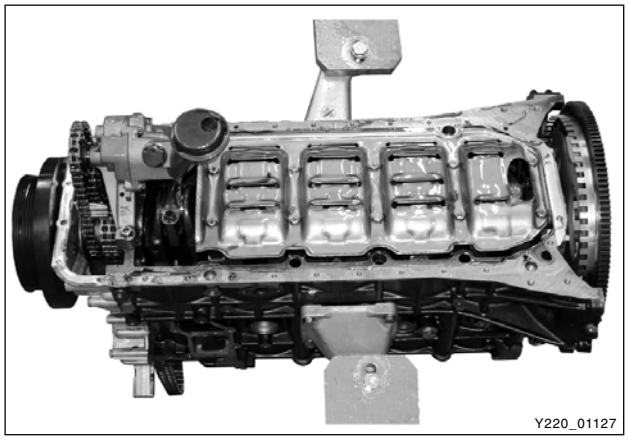

امداد خودرو فارما
تلفن شبانه روزی: ۰۲۱-۸۸۸۶۲۰۸۵
FarmaSOS.com

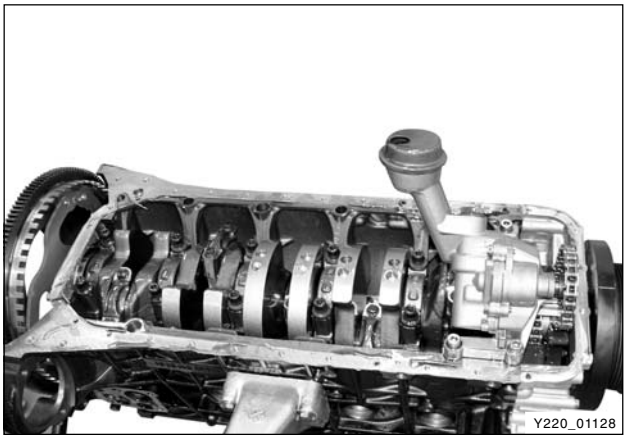

35. Unscrew the bolts and remove the oil strainer assembly.

Installation Notice

Tightening torque	25 ± 2.5 Nm

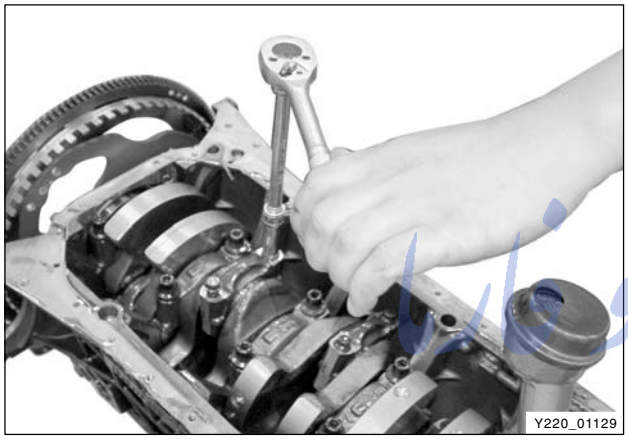

36. Remove the piston assembly from the cylinder block.

A. Unscrew the bearing cap bolts.

Installation Notice

Step 1	55 ± 5.0 Nm
Step 2	90° + 10°

* Tighten the bolts from #1 cap.

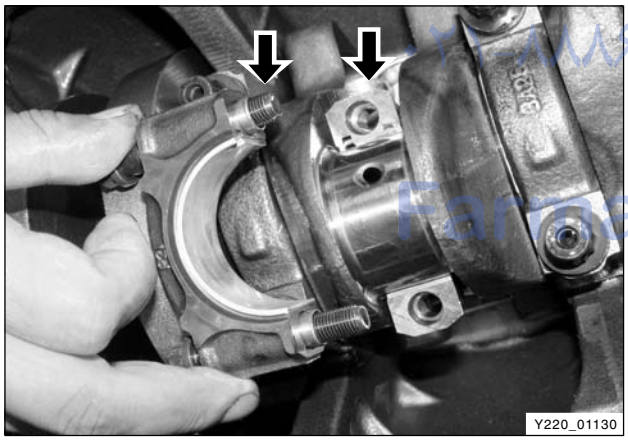

Installation Notice

**** Align the oil grooves in bearing cap and connecting rod.***

B. Remove the bearing caps and lower bearing shells.

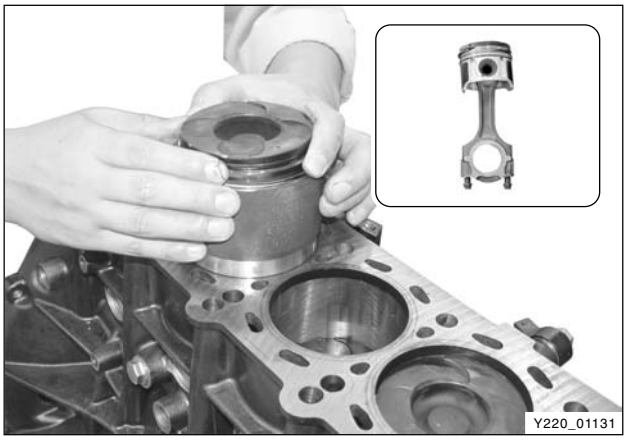

C. Remove the piston assembly through the cylinder.

Notice

Do not mix up upper and lower crankshaft bearing shells.

امداد خودرو ایران
تلفن شبانه روزی: ۰۲۱-۸۸۶۲۰۸۵
FarmaSOS.com

D. Remove the snap ring piston pin from the piston.

E. Disassemble the piston and connecting rod.

F. Remove the piston rings from the piston.

Installation Notice

Replace the piston ring, bearing and snap ring with new ones.

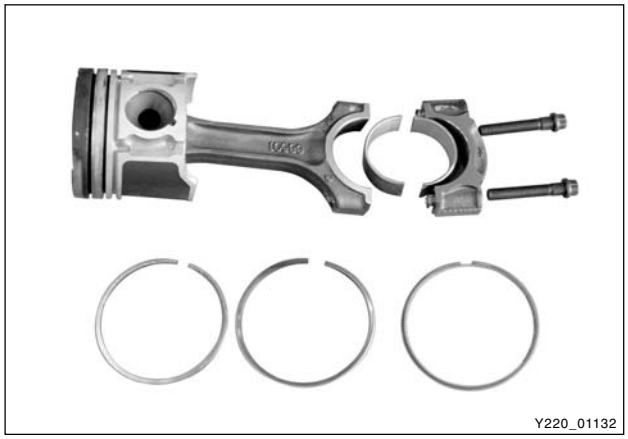
Y220_01132

37. Lock the flywheel and remove the center bolt and crankshaft pulley.

Installation Notice

Tightening torque	325 ± 33 Nm, 90° + 10°

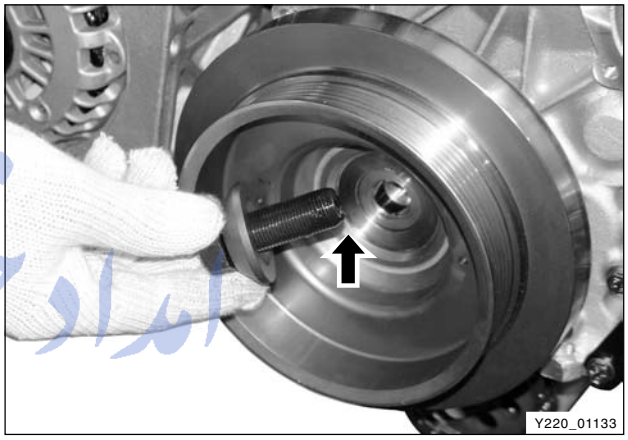
Y220_01133

38. Remove the timing chain cover assembly.

A. Remove the cover bolts.

Installation Notice

Tightening torque	10 ± 1.0 Nm

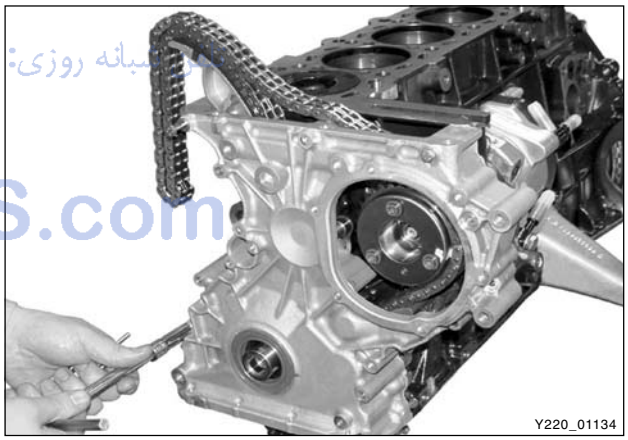
Y220_01134

B. Hold the timing chain and remove the timing chain cover by tapping it with a rubber hammer and a screwdriver.

Installation Notice

Apply the sealant on the parting surface.

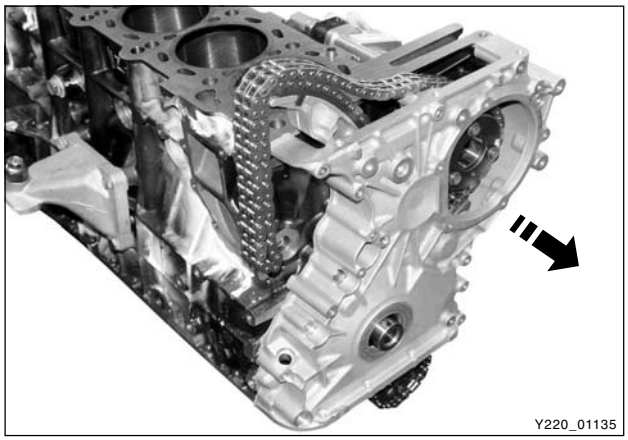
Y220_01135

امداد خودرو فارما
۰۲۱-۸۸۸۶۲۰۸۵ پشتیبانی روزی
FarmaSOS.com

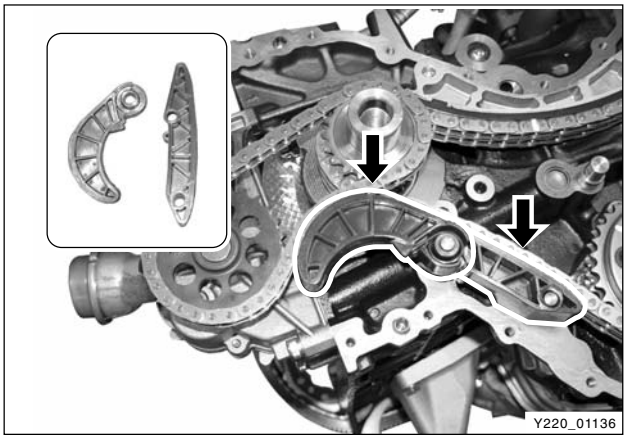

39. Remove the timing chain guide rail and timing chain.

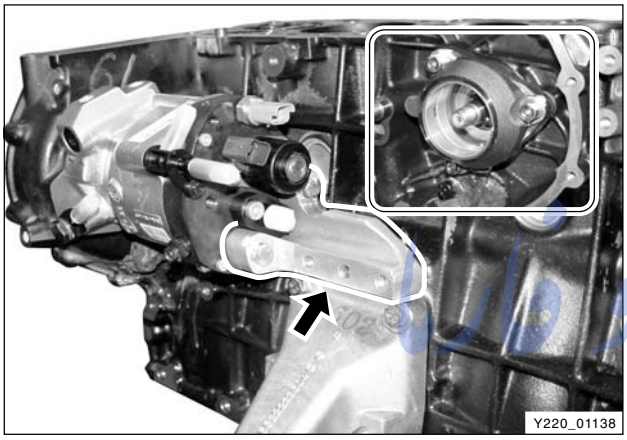

40. Remove the HP pump bolts and the HP pump bracket bolts.

امداد خودرو ایران
۰۲۱-۸۸۸۶۲۰۸۵ تلفن شبانه روزی:
FarmaSOS.com

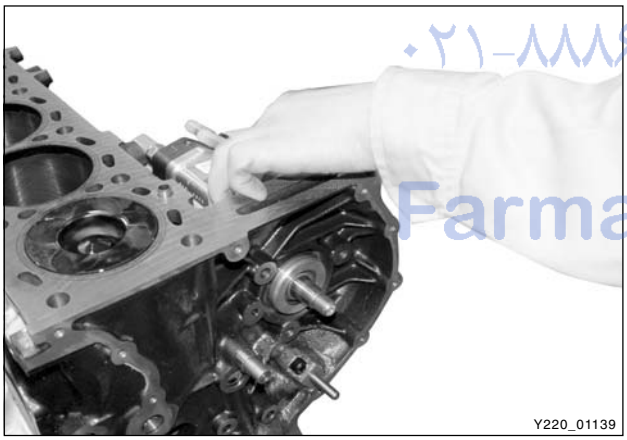

- Remove the HP pump assembly.

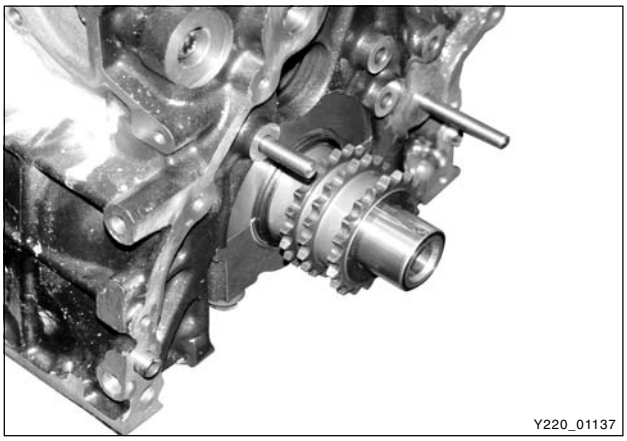

41. Remove the crankshaft sprocket with a special tool.

42. Remove the flywheel and the crankshaft strainer.

Installation Notice

Tightening torque	45 ± 5.0 Nm, 90° + 10°

43. Unscrew the bolts and remove the crankshaft bearing caps.

Installation Notice

Tightening torque	55 ± 5.0 Nm, 90° + 10°

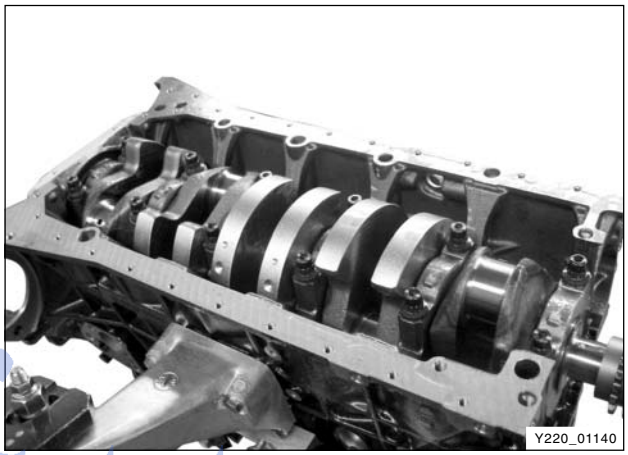

Notice

- ***Remove the bearing cap bolts from inside to outside with a pair.***
- ***Do not mix up the crankshaft bearing caps and shells.***

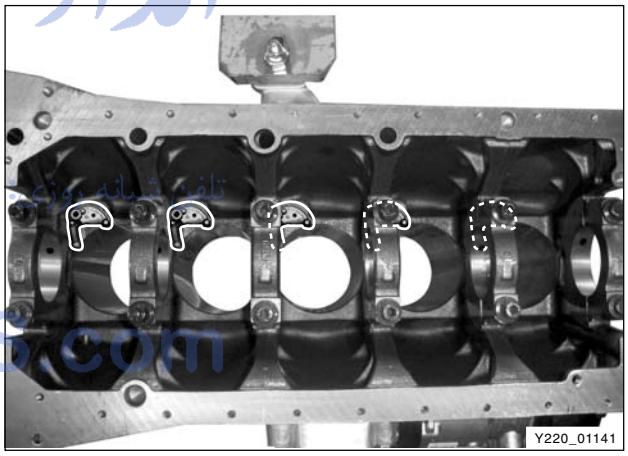

امداد خودرو فارما
تلفن شبانه روزی ۰۲۱-۸۸۸۶۲۰۸۵
FarmaSOS.com

Note

- ***Install in the reverse order of removal.***
- ***Tighten the fasteners with the specified tightening torques.***
- ***Replace the gaskets and bearings with new ones.***
- ***Make sure to install the gaskets in correct direction.***

MEMO

امداد خودرو فارما
تلفن شبانه روزی: ۰۲۱-۸۸۸۶۲۰۸۵
FarmaSOS.com

SECTION DI02

ENGINE HOUSING

امداد خودرو فارما

تلفن شبانه روزی: ۰۲۱-۸۸۸۶۲۰۸۵

FarmaSOS.com

SECTION DI02

ENGINE HOUSING

Table of Contents

CYLINDER HEAD/CYLINDER BLOCK DI02-3

Cylinder head DI02-3
Camshaft assembly DI02-17
Timing chain assembly DI02-25
Cylinder block DI02-29

CRANKSHAFT DI02-32

Arrangement of thrust washers and bearings DI02-33
Torsional vibration damper DI02-38

FLYWHEEL DI02-42

Dual mass flywheel (DMF, Manual transmission equipped vehicle) DI02-42

PISTON AND CONNECTING ROD DI02-44

Piston ring DI02-45
Cylinder inner diameter and piston size DI02-46

HIGH PRESSURE PUMP (HPP) DI02-51

Components locator DI02-51

امداد خودرو فارما
۰۲۱-۸۸۸۶۲۰۸۰ تلفن شبانه روزی
FarmaSOS.com

CHANGED BY	
EFFECTIVE DATE	
AFFECTED VIN	

امداد خودرو فارما

تلفن شبانه روزی: ۸۸۸۶۲۰۸۵-۰۲۱

FarmaSOS.com

CYLINDER HEAD/CYLINDER BLOCK

CYLINDER HEAD

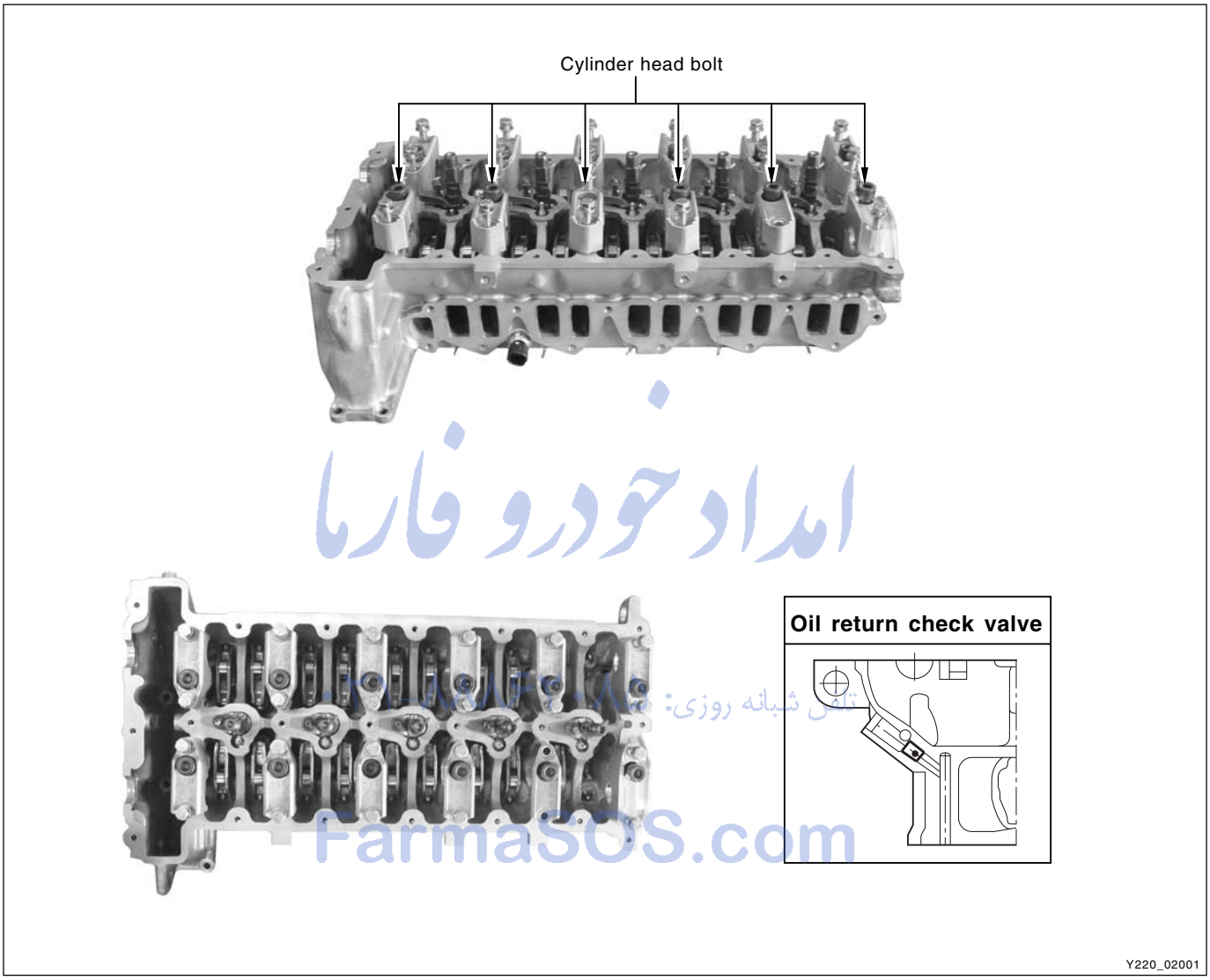

امداد خودرو فارما
FarmaSOS.com

Y220_02001

▶ System Characteristics

- 4-valve DOHC valve mechanism
- Swirl and tangential port
- 4-bolt type cylinder head bolt
- Water jacket integrated casting
- Integrated chain housing and cylinder head
- Oil gallery: drilled and sealing with cap and screw plug

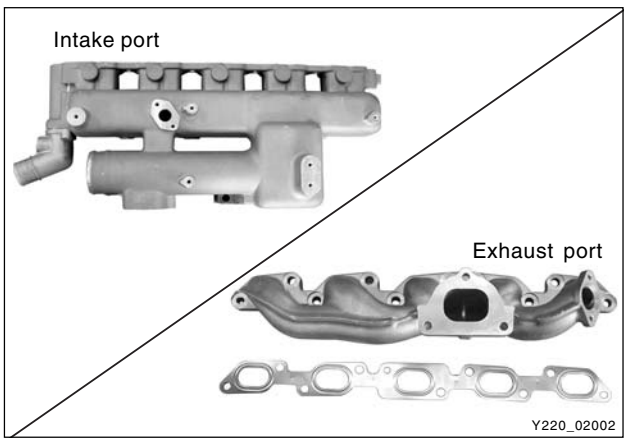

Y220_02002

CHANGED BY	
EFFECTIVE DATE	
AFFECTED VIN	

▶ Cylinder Head Pressure Leakage Test

※ Preceding Works:

- Removal of cylinders
- Removal of intake and exhaust manifold
- Removal of valves

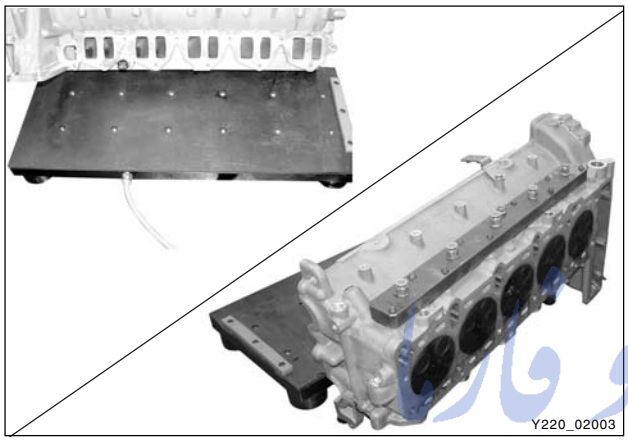

Test Procedures

1. Place the pressure plate on a flat-bed work bench.

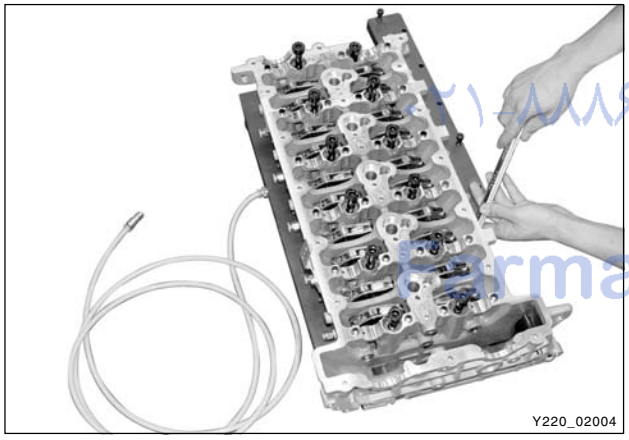

2. Install the cylinder head on the pressure plate.

Tightening torque	60 Nm

3. Immerse the cylinder head with the pressure plate into warm water (approx. 60°C) and pressurize with compressed air to 2 bar.

Notice

Examine the cylinder head for air bubbling. If the air bubbles are seen, replace the cylinder head.

امداد خودرو فارما
تلفن شبانه روزی: ۰۲۱-۸۸۸۶۲۰۸۵
FarmaSOS.com

▶ Cylinder Head Parting Surface Check

Specifications

Height “A” (cylinder head parting surface - cylinder head cover parting surface)		142.9 ~ 143.1 mm
Minimum height after machining		142.4 mm
Permissible unevenness of parting surface	in longitudinal direction	0.08 mm
	in transverse direction	0.0 mm
Permissible variation of parallelism of top parting surface to bottom in longitudinal direction		within 0.1 mm
Peak-to-valley height		0.004 mm
Valve recess “a”	Intake valve	0.1 ~ 0.7 mm
	Exhaust valve	0.1 ~ 0.7 mm

Measurement

1. Measure the cylinder head height “A”.

Limit	Over 142.4 mm

Notice

If the height is less than the limit, the cylinder head must be replaced.

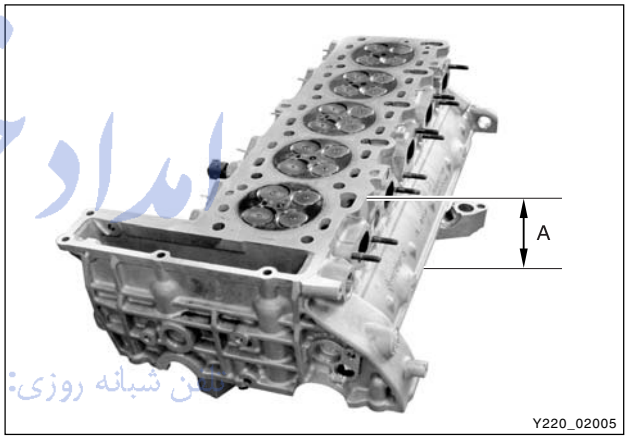

2. Insert the valves into the valve guides and measure the recesses.

Valve recess “a”	0.1 ~ 0.7 mm

Notice

If the measured value is out of the specified range, machine the valve seat as much as necessary until the specified value is achieved.

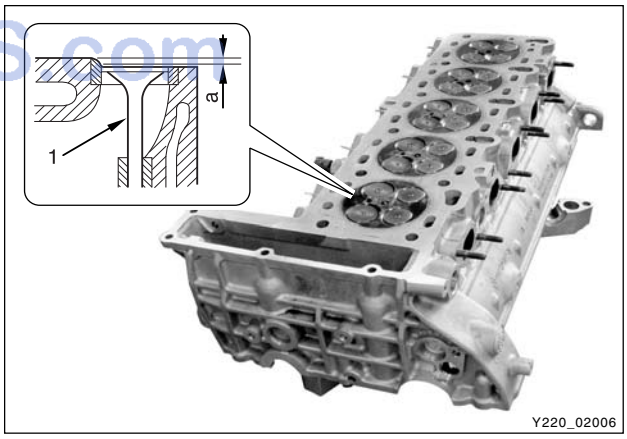

ایداد خودرو فارما
۰۲۱-۸۸۸۶۲۰۸۵ تلفن شبانه روزی:
FarmaSOS.com

CHANGED BY	
EFFECTIVE DATE	
AFFECTED VIN	

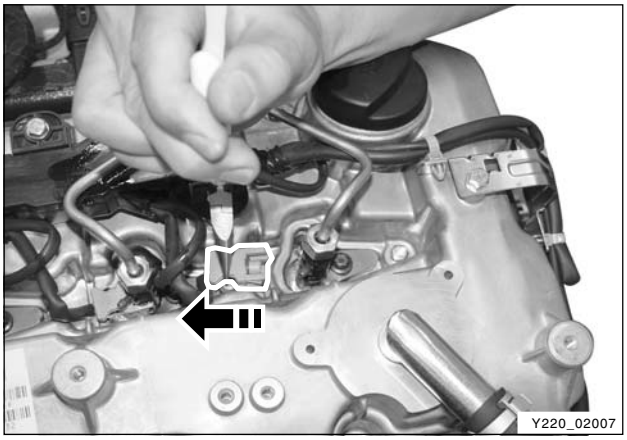

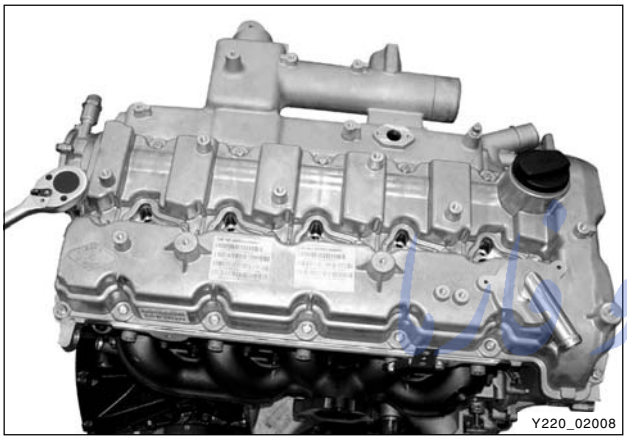

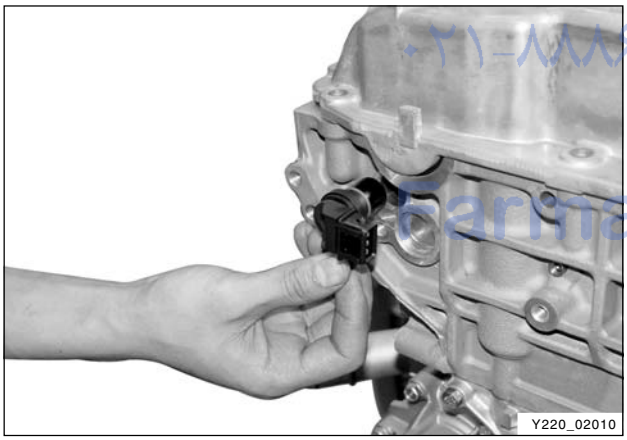

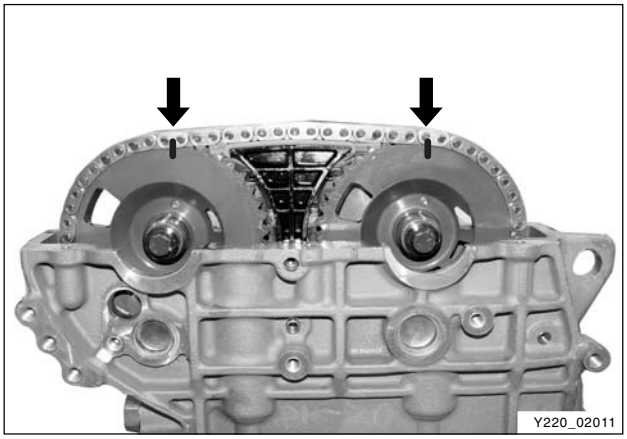

Cylinder Head - Disassembly and Reassembly

▶ Disassembly

※ Preceding Works:
- Removal of fan belt
- Removal of fuel supply and return lines
- Removal of EGR related pipes
- Removal of intake manifold mounting bracket
- Removal of injector fuel line and connector, and glow plug connector

Notice

- ***Plug the openings of injector holes and common rail with the protective caps.***

1. Remove the cylinder head cover.

2. Remove the camshaft position sensor.
   - The intake manifold can be interfered by the sensor when installing.

3. Mark on the intake camshaft sprocket and exhaust camshaft sprocket for timing setting during installation.

امداد خودرو ایرانیان
۰۲۱-۸۸۸۶۲۰۸۵
FarmaSOS.com

4. Remove the chain tensioner.

※ Preceding work: removal of EGR pipe and oil dipstick tube

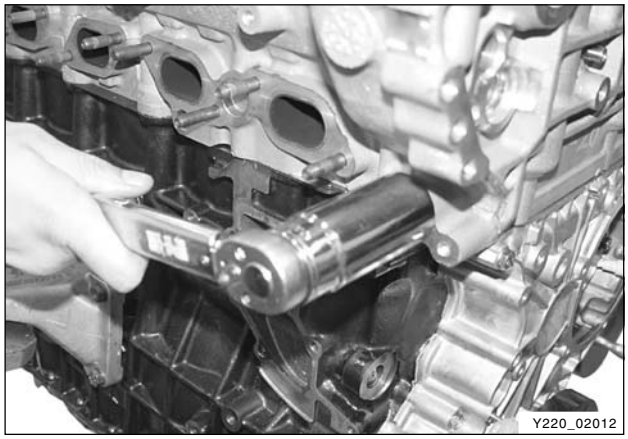

5. Hold the camshafts and remove the intake camshaft sprocket and exhaust camshaft sprocket.

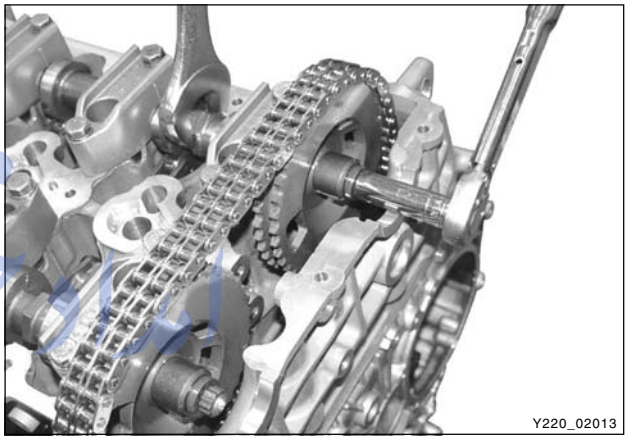

6. Pull out the lock pins with a sliding hammer and remove the upper guide rail.

Notice

Correctly align the electronic control module onto the shift plate by using two central pins when installing.

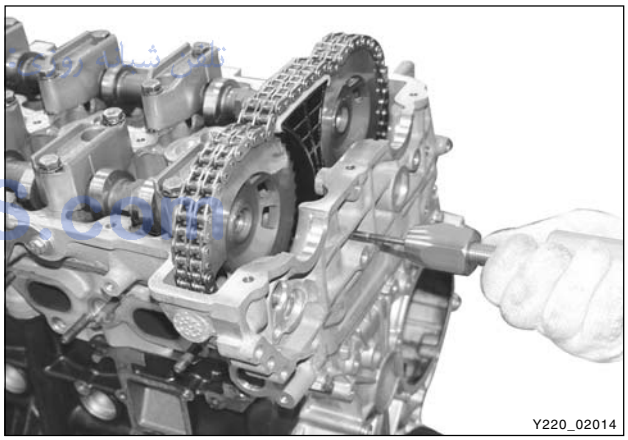

7. Remove the oil cooler, then remove the intake manifold.
   - The intake manifold can be interfered by the cylinder head bolt (M8 x 50).

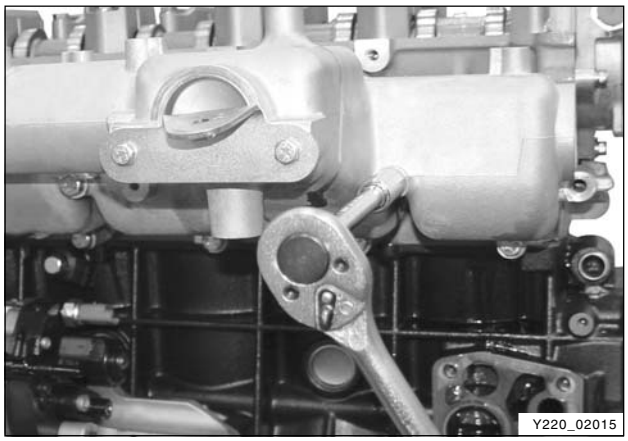

امداد خودرو فارما
۰۲۱-۸۸۸۶۲۰۸۵
FarmaSOS.com

CHANGED BY	
EFFECTIVE DATE	
AFFECTED VIN	

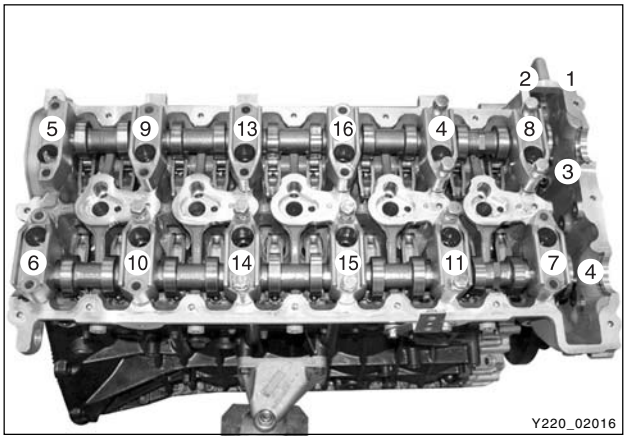

8. Remove the cylinder head bolts according to the numerical sequence.

M8 x 25	: 2 EA	
M8 x 50	: 2 EA	
M12 x 177	: 11 EA	
M12 x 158	: 1 EA	(Vacuum pump side)

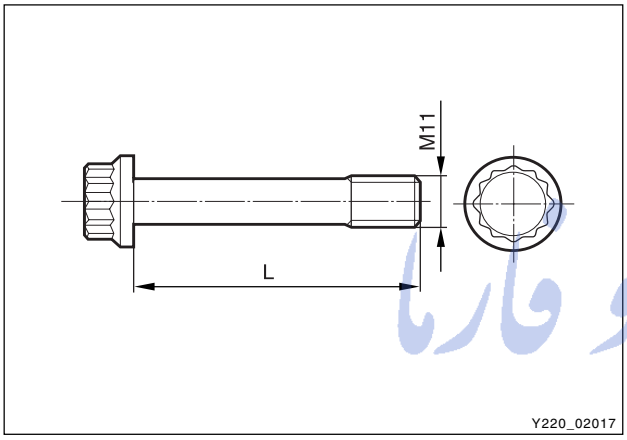

9. Measure the length of cylinder head bolts.
   - If the maximum length is exceeded by 2 mm, replace the cylinder head bolt.

Length when new	Maximum Limit
177 mm	179 mm
158 mm	160 mm

امداد خودرو فارما
تلفن شبانه روزی: ۰۲۱-۸۸۸۶۲۰۸۵
FarmaSOS.com

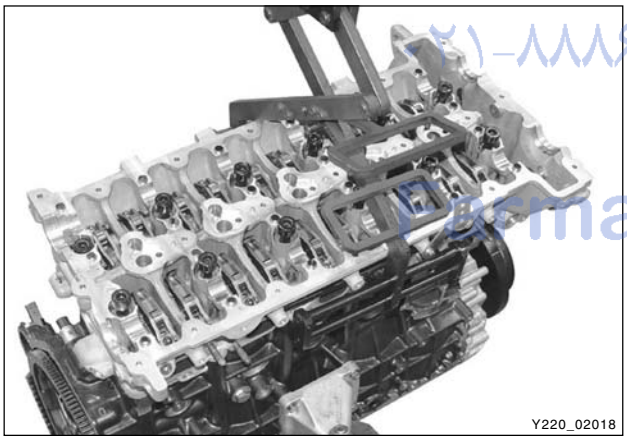

10. Remove the cylinder head.

Notice

- ***Inspect the cylinder head surface.***
- ***Store the removed injectors and glow plugs so that they will not be damaged.***

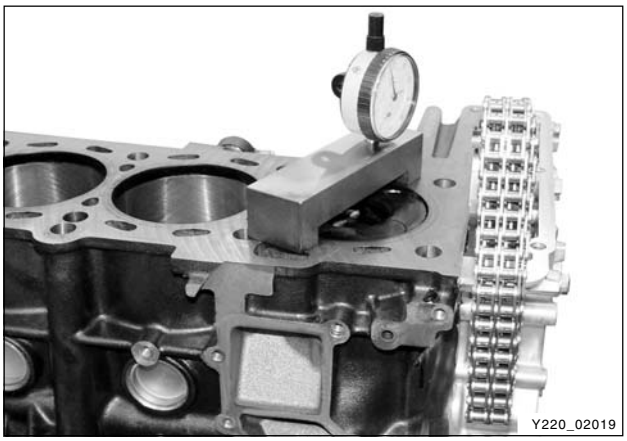

11. Measure the piston protrusion from the parting surface.
    - Specified Value: 0.765 ~ 1.055 mm

▶ Reassembly

1. Install the cylinder head with the steel gasket.

Notice

Make sure to place the "TOP" mark upward.

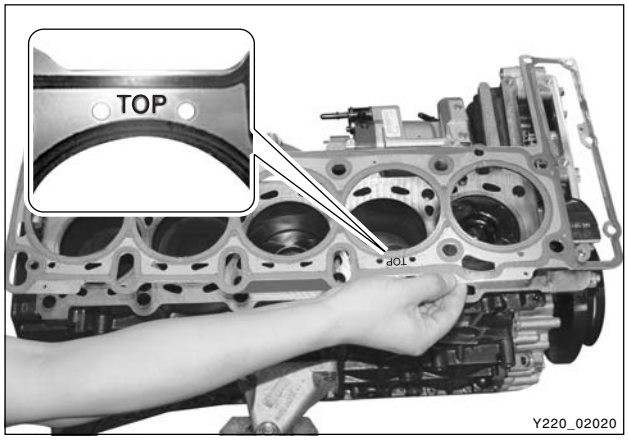

2. Tighten the cylinder head bolts to specified torque and torque angle.

Tightening torque	Step 1	20 ± 2.0 Nm
	Step 2	85 ± 5.0 Nm
	Step 3	270° (90° x 3) + 10°

Notice

- ***Apply the oil on the bolt thread when installing.***
- ***Always insert new washer first.***
- ***The bolts (12) at vacuum pump side are shorter than others.***

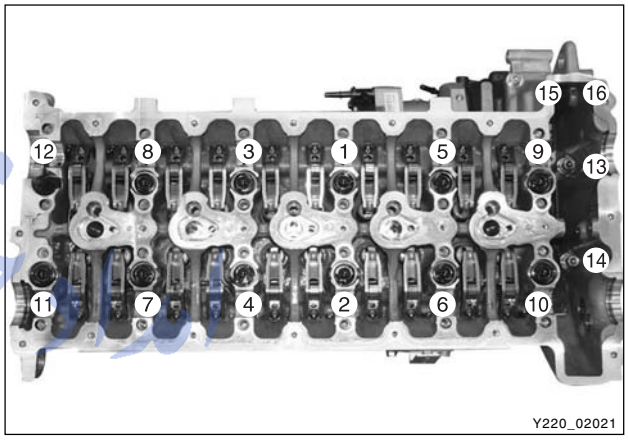

3. Install the HLA device and finger follower. Check the HLA device with the diagnosis procedures before installation.

Notice

- ***Put the cylinder head on the locating pins.***

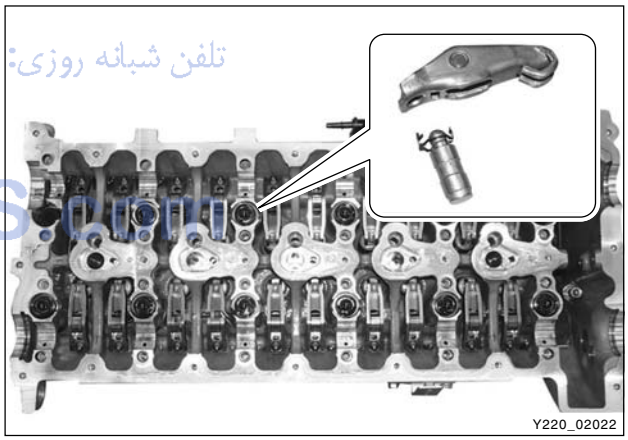

4. Tighten the camshaft bearing cap bolts.
   - Intake: #2, #4, #5
   - Exhaust: #8, #10, #11

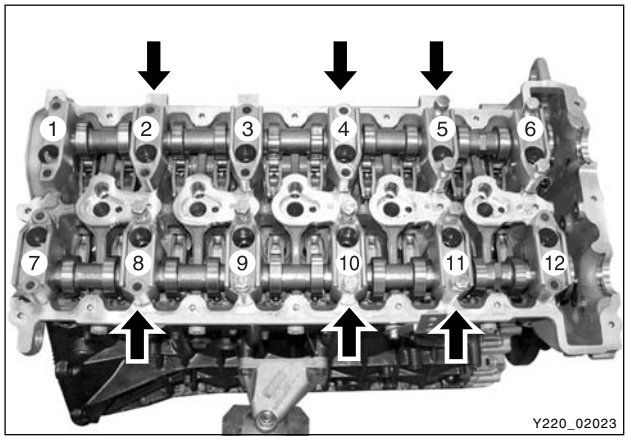

FarmaSOS.com

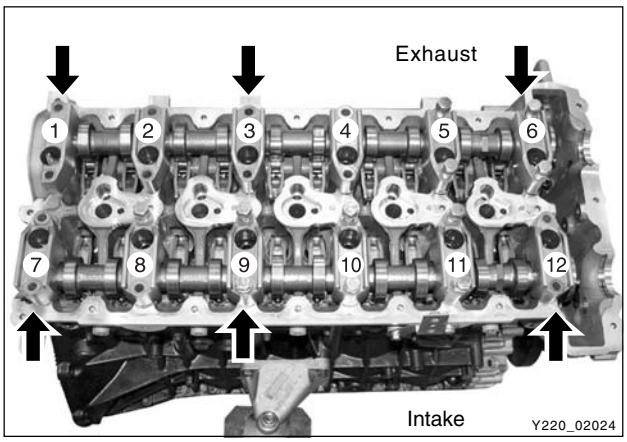

- Exhaust: #1, #3, #6
- Intake: #7, #9, #12

Tightening torque	25 Nm

Notice

Check the finger follower positions and align if needed.

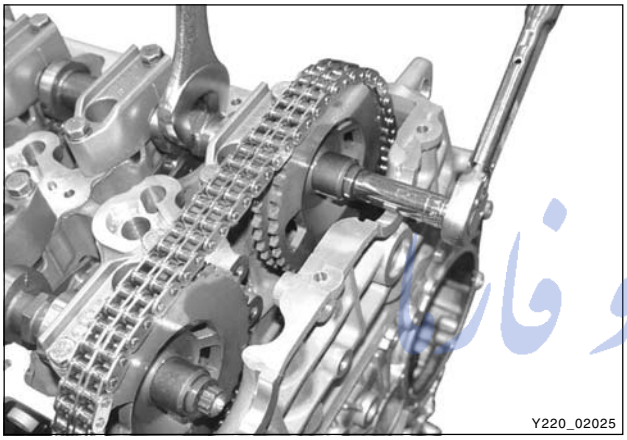

5. Install the intake and exhaust camshaft sprockets and the timing chain.

Tightening torque	25 Nm + 90°

Notice

- ***If the sprocket bolt is stretched over 0.9 mm, replace it with new one.***
- ***Always install the intake camshaft sprocket first.***
- ***Ensure that the markings on camshaft sprocket and timing chain are aligned.***
- ***Make sure that the timing chain is securely seated on the guide rail.***

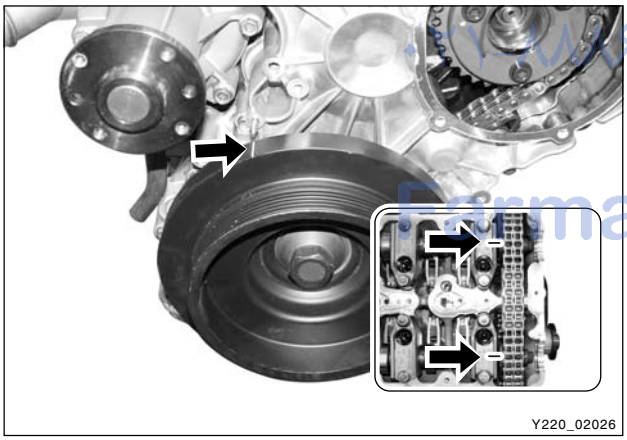

6. Rotate the crankshaft pulley two revolutions and ensure that the OT mark on the crankshaft pulley and the OT mark on the camshaft pulley are aligned.

Notice

If the markings are not aligned, reinstall the cylinder head.

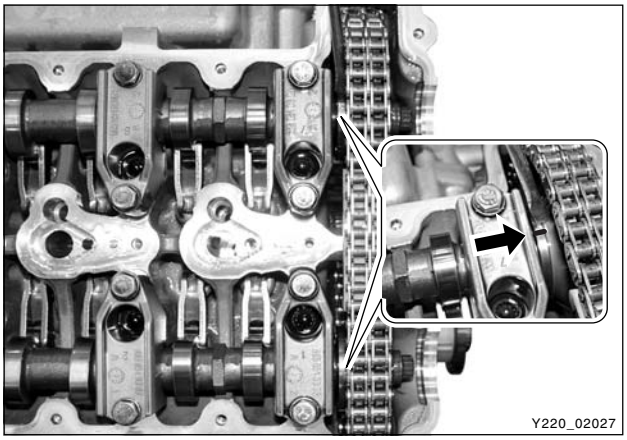

7. Place the bearing cap with the OT marks on both camshafts facing upward.

Notice

- ***Apply the sealant on the cap (#12) for the vacuum pump when installing.***
- ***Apply the oil on the bearing journals before installation.***

FarmaSOS.com

8. Fit the timing chain onto the camshaft sprockets and install the upper guide rail.
   - Install the clamping guide rail pin.

Notice

- ***Install the guide rail with slanted side facing forward.***
- ***Be careful not to change the timing of HP pump when fitting the timing chain.***

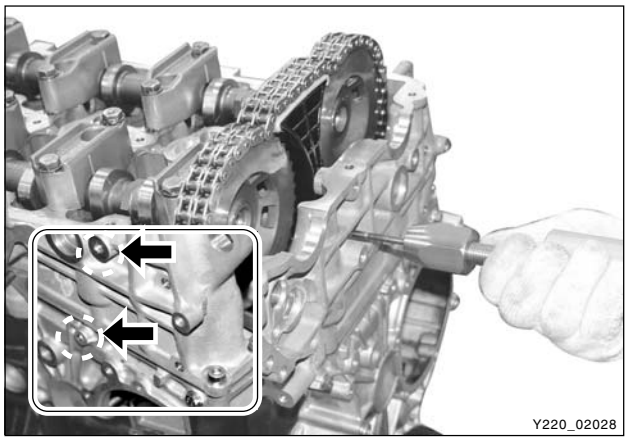

9. Tighten the intake and exhaust camshaft sprocket bolts.

Tightening torque	25 ± 2.5 Nm, 90° + 10°

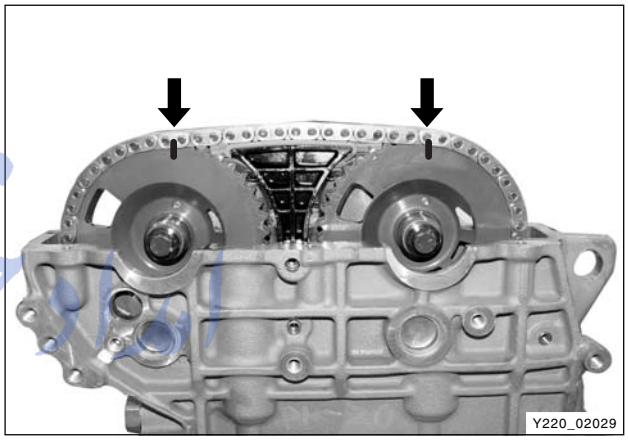

10. Install the camshaft position sensor.
11. Apply the Loctite to the bolt and tighten it.

Tightening torque	10 Nm

12. Check the intake camshaft before installing the vacuum pump.

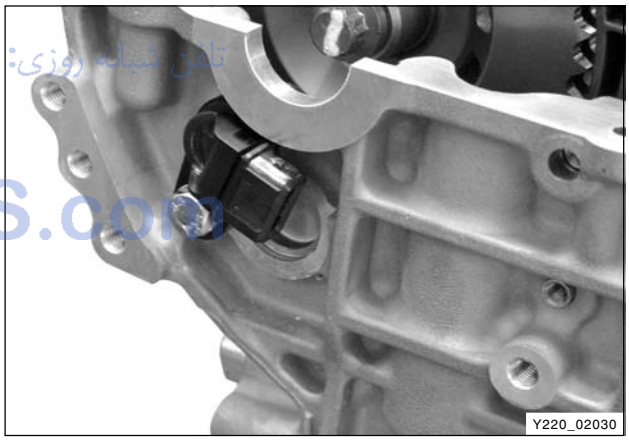

13. Install the intake manifold. Install the oil cooler with new gasket.

Tightening torque	25 Nm

Notice

Ensure that there is no leaks around the coolant line for #1 cylinder

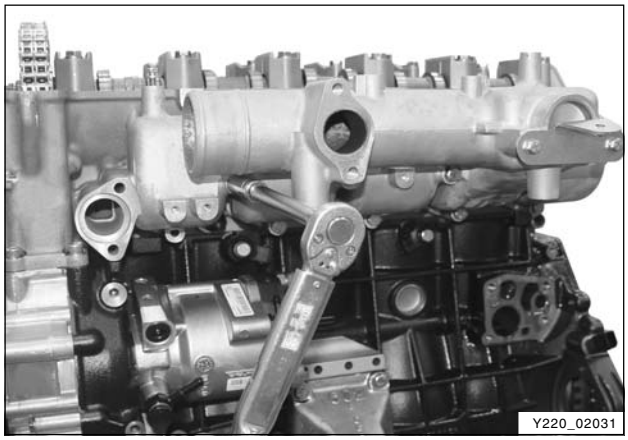

امداد خودرو فارما
تلفن شبانه روزی: ۰۲۱ ۸۸۸۶۲۰۸۵
FarmaSOS.com

CHANGED BY	
EFFECTIVE DATE	
AFFECTED VIN	



14. Install the chain tensioner.

Tightening torque	80 ± 8.0 Nm

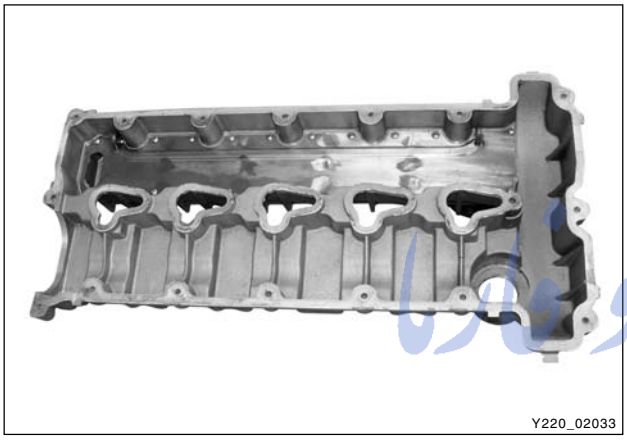

15. Install the cylinder head cover assembly.
16. Install the rubber gasket.

امداد خودرو ۰۲۱-۸۸۸۶۲۰۸۵ تلفن شبانه روزی:
FarnaSOS.com

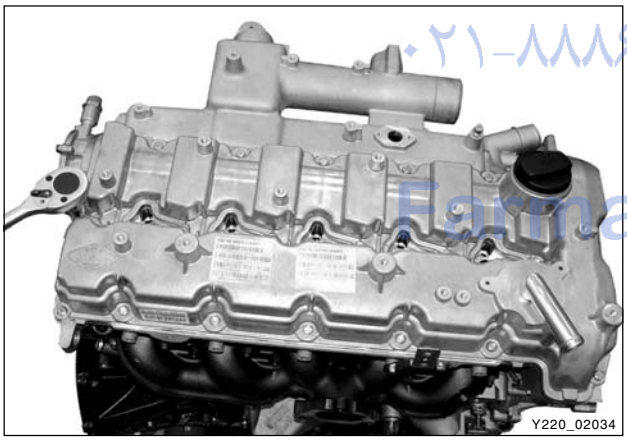

17. Tighten the cylinder head cover bolts.

Notice

- ***Apply the sealant to the bolts for the vacuum pump and the timing chain cover.***

Tightening torque	10 ± 1.0 Nm

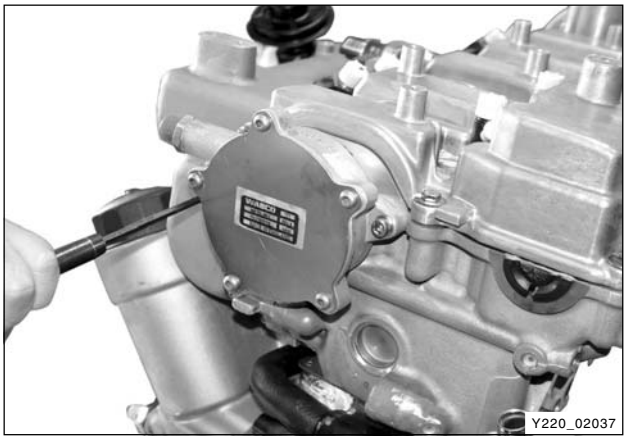

18. Check the parting surface of the #12 bearing cap and the cylinder head for contacting.
19. Check if the O-ring is installed in the vacuum pump.
20. Install the vacuum pump with the key groove aligned.
21. Tighten the vacuum pump mounting bolts.

Tightening torque	10 ± 1.0 Nm

22. Install the PCV valve assembly on the cylinder head.

Tightening torque	10 ± 1.0 Nm

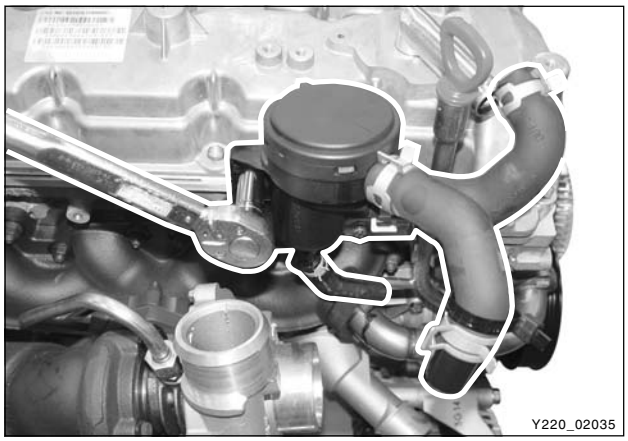

23. Engage the engine oil hose and the PCV valve hose.

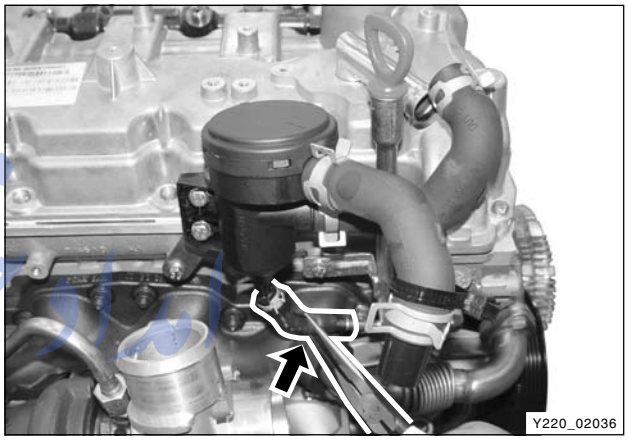

24. Remove the protective caps and install the new fuel supply pipes.

Notice

- ***To keep the cleanness and protect the components, the fuel pipes should be replaced with new ones.***
- ***Be careful not to be mixed the fuel pipes because the pipe appearance of #1 and #3 cylinders and #2 and #4 are same each other.***

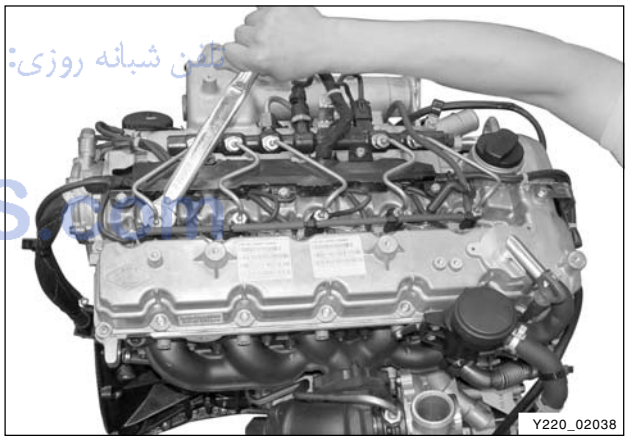

امداد خودرو فارما
۰۲۱-۸۸۸۶۲۰۸۵ تلفن شبانه روزی:
FarmaSOS.com

CHANGED BY	
EFFECTIVE DATE	
AFFECTED VIN	

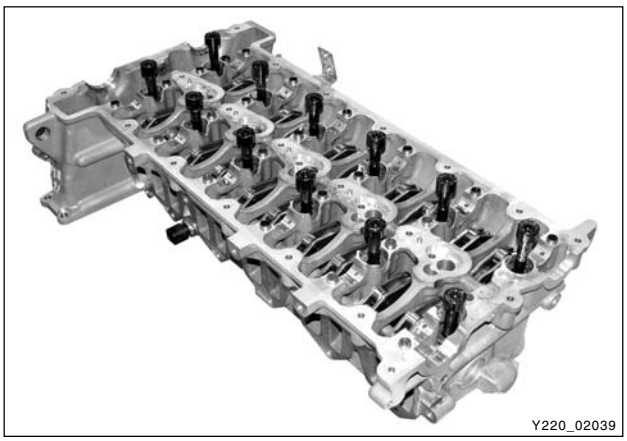

Intake/Exhaust - Removal/Installation

1. Remove the cylinder head assembly.

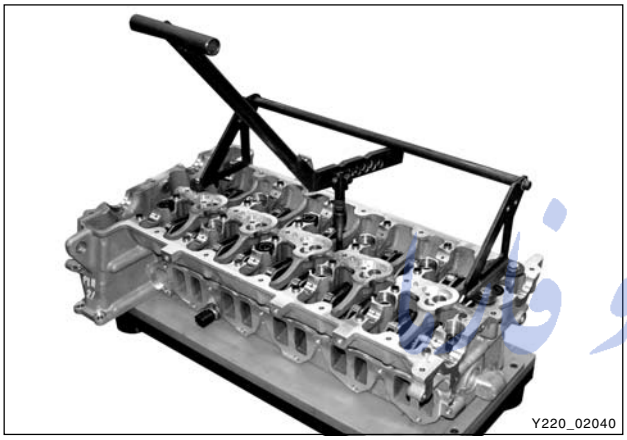

2. Install the removed cylinder head on the assembly board (special tool) and set the supporting bar and lever (special tool) on the cylinder head.

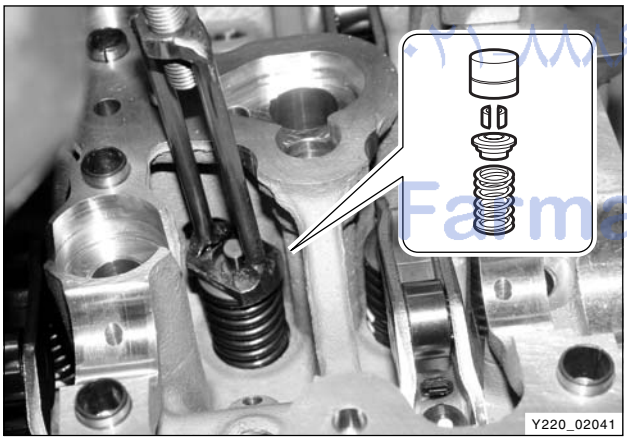

3. Push the valve spring seat down with the lever and remove the valve cotter, valve seat and valve spring.

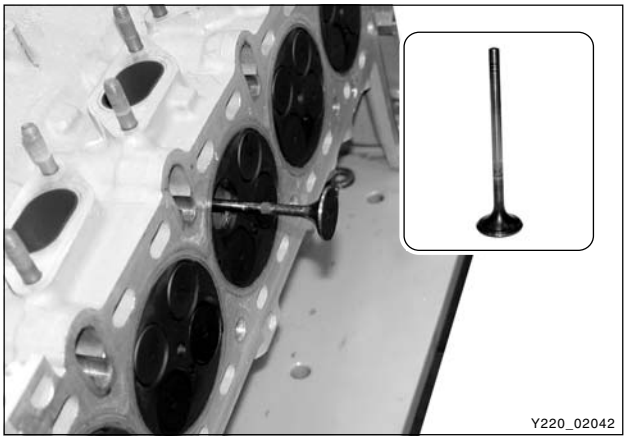

4. Remove the valves from the cylinder head.

امداد خودرو فارما
FarmaSOS.com

▶ Special Tools and Equipment

Name and Part Number	Application
Compression pressure measuring adapter and gauge  Y220_02043	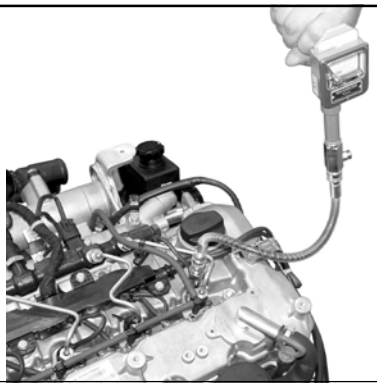 Y220_02044
Pressure plate (cylinder head pressure leakage test) 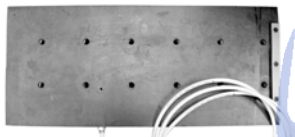 Y220_02045	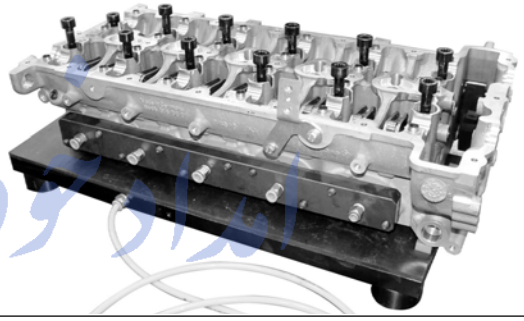 Y220_02046
Pressure plate (intake camshaft pressure leakage test  Y220_02047	 Y220_02048
Pressure plate (exhaust camshaft pressure leakage test)  Y220_02049	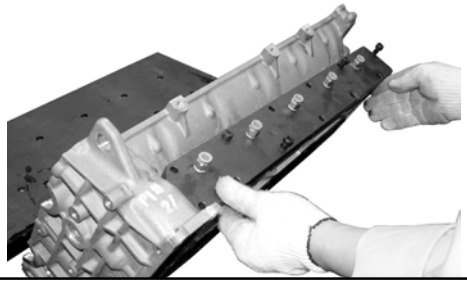 Y220_02050

اندام خودرو فارما
تلفن شبانه روزی: ۰۲۱-۸۸۸۶۲۰۸۵
FarmaSOS.com

CHANGED BY	
EFFECTIVE DATE	
AFFECTED VIN	

Name and Part Number	Application
Cylinder head hanger  Y220_02051	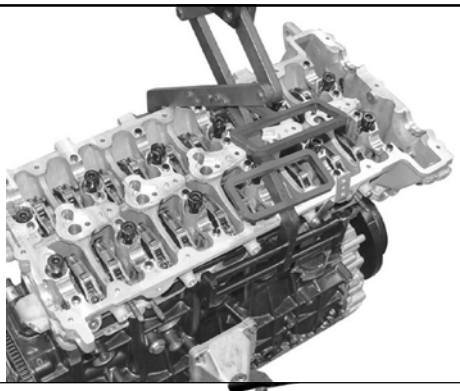 Y220_02052
Supporting bar and lever  Y220_02053	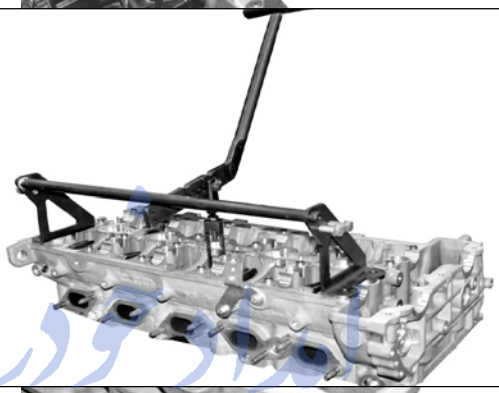 Y220_02054
Guide pin extractor  Y220_02055	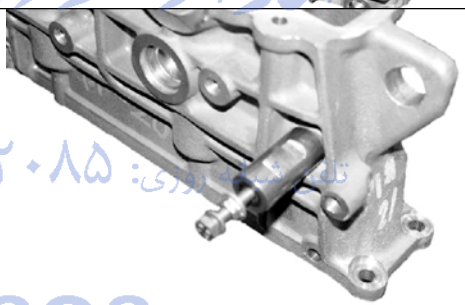 Y220_02056
Intake manifold guide pin  Y220_02057	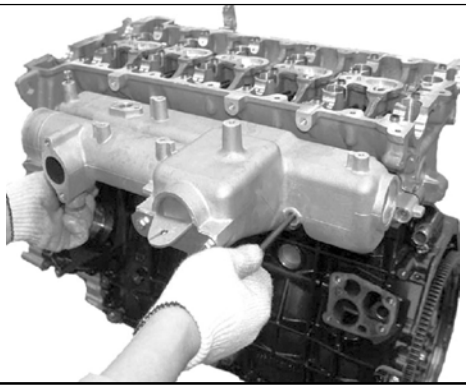 Y220_02058

امداد خودرو فارما
تلفن شبانه روزی: ۰۲۱-۸۸۸۶۲۰۸۵
FarmaSOS.com

CAMSHAFT ASSEMBLY

※ Preceding Work: Removal of cylinder head cover

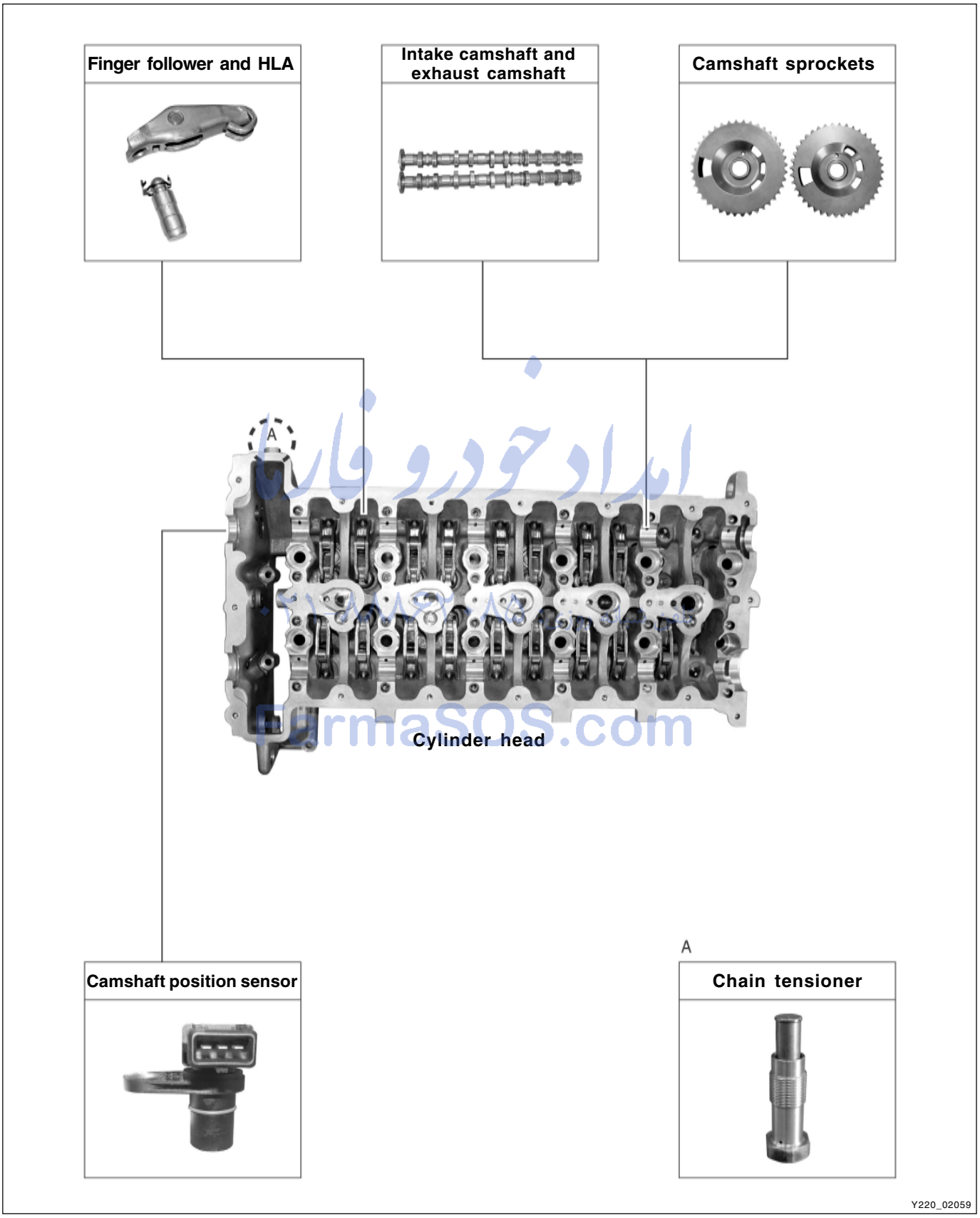

ایراد خودرو فارما
FarmaSOS.com

CHANGED BY	
EFFECTIVE DATE	
AFFECTED VIN	

▶ Camshaft Position Sensor

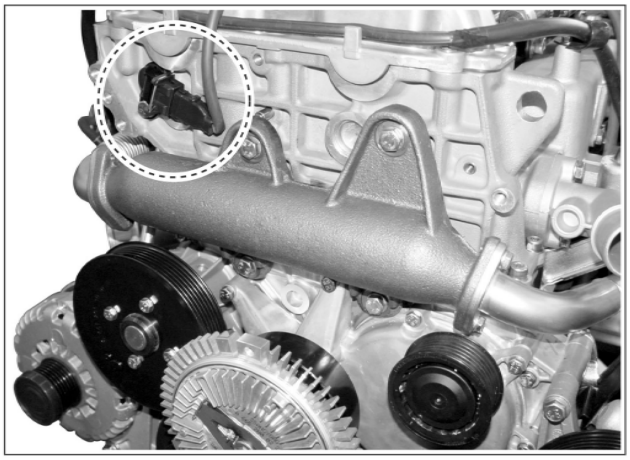

<Location of camshaft position sensor>

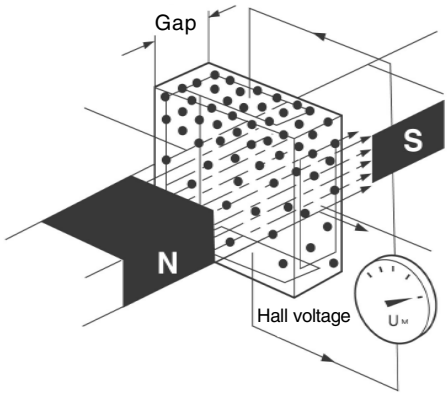

<Operation principle of hall sensor>

Y220_02060

The camshaft position sensor uses hall-effect to set the camshaft position and metallic-magnetic-material sensor end is attached on the camshaft and then rotates with it. If sensor protrusion passes camshaft position sensor's semi-conductor wafer, magnetic field changes direction of electron on the semi-conductor wafer to the current flow direction that passes through wafer from the right angle. When operation power is supplied from camshaft position sensor, camshaft hall sensor generates signal voltage. The signal voltage will be 0V if protrusion and camshaft position sensor are near and 5 V if apart.

ECU can recognize that the No. 1 cylinder is under compression stroke by using this voltage signal (hall voltage).

The rotating speed of camshaft is half of the crankshaft and controls engine's intake and exhaust valves. By installing sensor on the camshaft, can recognize specific cylinder's status, compression stroke or exhaust stroke, by using camshaft position when the piston is moving toward TDC (OT). Especially when started first, it is difficult to calculate the stroke of a specific cylinder with only crankshaft position sensor.

Accordingly, camshaft position sensor is necessary to identify the cylinders correctly during initial starting. However, when engine is started, ECU learns every cylinder of the engine with crankshaft position sensor signals so can run the engine even though the camshaft position sensor is defective during engine running.

Pulse generation	Cam angle ± 6°
Sensor air gap	0.2 ~ 1.8 mm
Tightening torque	10 ~ 14 Nm
Operating temperature	- 40 ~ 130°C

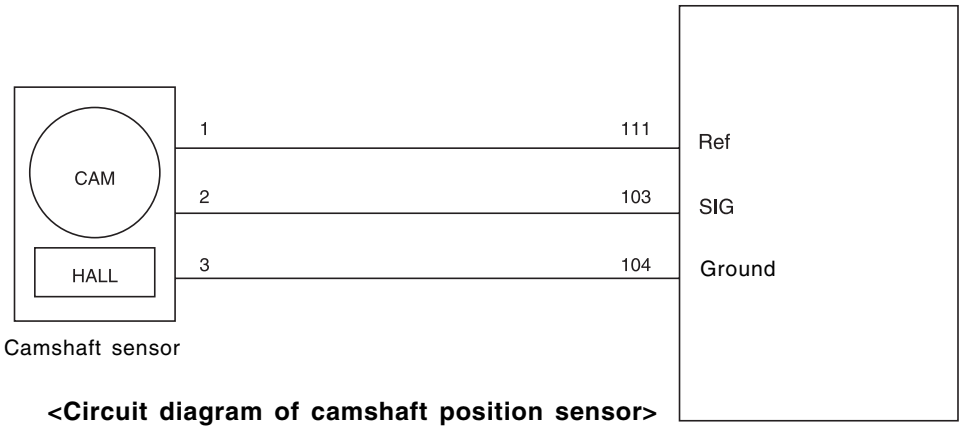

<Circuit diagram of camshaft position sensor>

Y220_02061

Removal

※ Preceding Works:

- Removal of fan belt
- Removal of fuel supply and return lines
- Removal of intake manifold mounting bracket

1. Remove the injector fuel line and connector, and glow plug connector

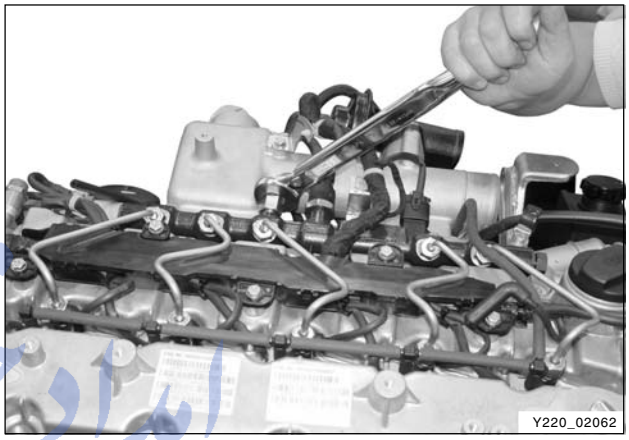

Notice

Plug the openings of injector holes and common rail with the protective caps.

2. Remove the cylinder head cover.

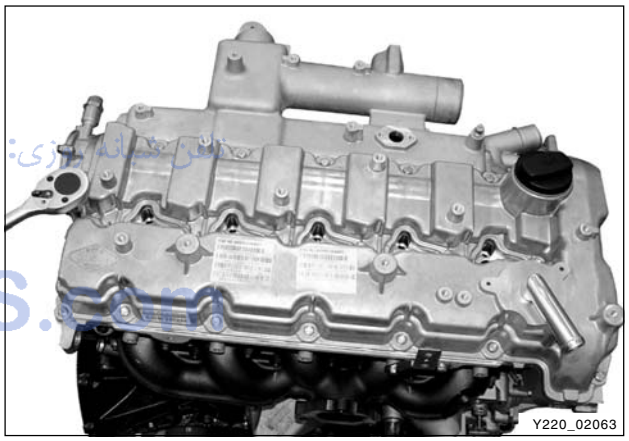

3. Remove the camshaft position sensor.

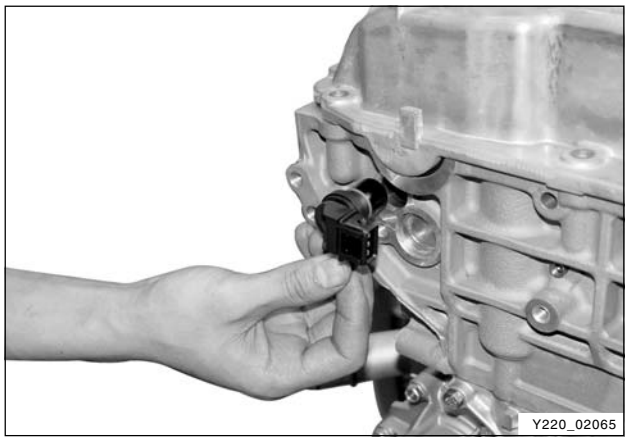

امداد خودرو فارما
۰۲۱-۸۸۸۶۲۰۸۵
FarmaSOS.com

CHANGED BY	
EFFECTIVE DATE	
AFFECTED VIN	

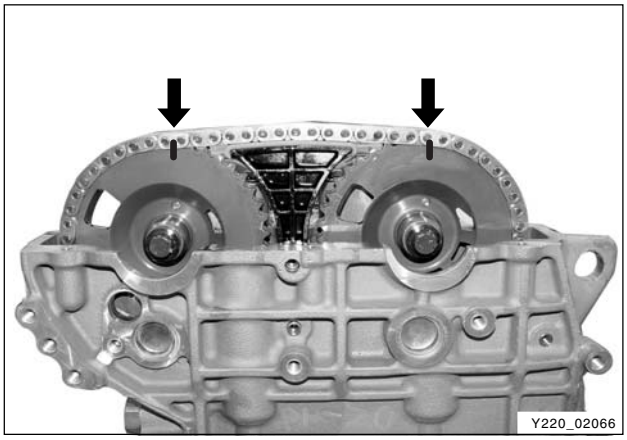

4. Mark on the intake camshaft sprocket and exhaust camshaft sprocket for timing setting during installation.

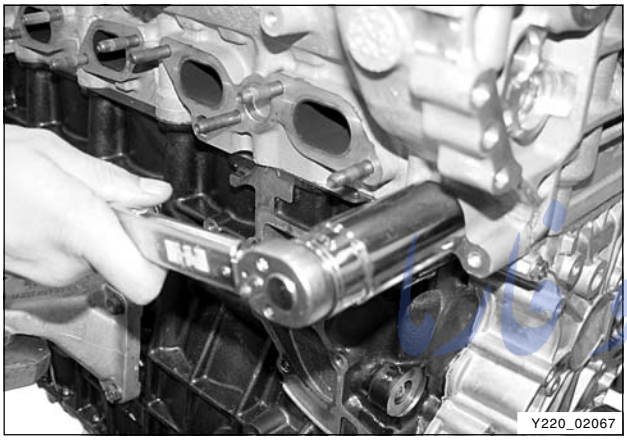

5. Remove the chain tensioner.

※ Preceding work: removal of EGR pipe and oil dipstick tube

امداد خودرو
۰۲۱-۸۸۸۶۲۰۸۵
FarmaSOS.com

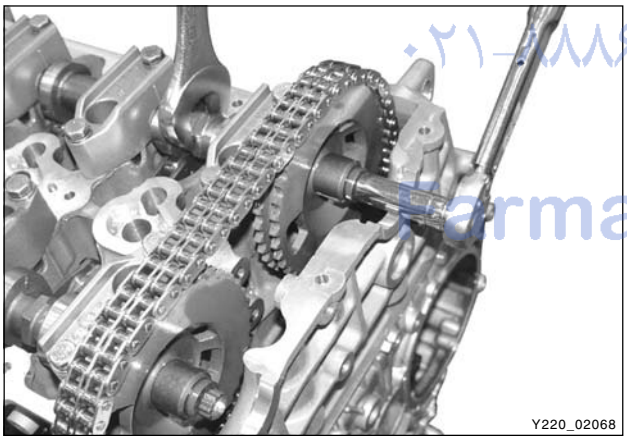

6. Hold the camshafts and remove the intake camshaft sprocket and exhaust camshaft sprocket.

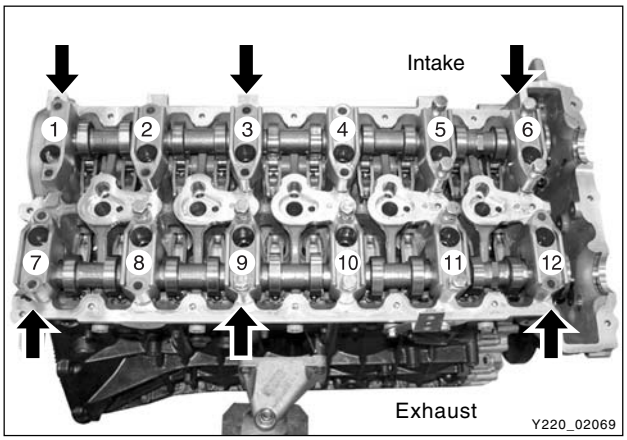

7. Remove the camshaft bearing cap bolts so that the tightening force can be relieved evenly.
   - Intake: #1, #3, #6
   - Exhaust: #7, #9, #12

* However, there is no specific removal sequence.

- Intake: #2, #4, #5
- Exhaust: #8, #10, #11

* Do not remove the bolts at a time completely. Remove them step by step evenly or camshaft can be seriously damaged.

8. Remove the intake and exhaust camshafts from the cylinder head.

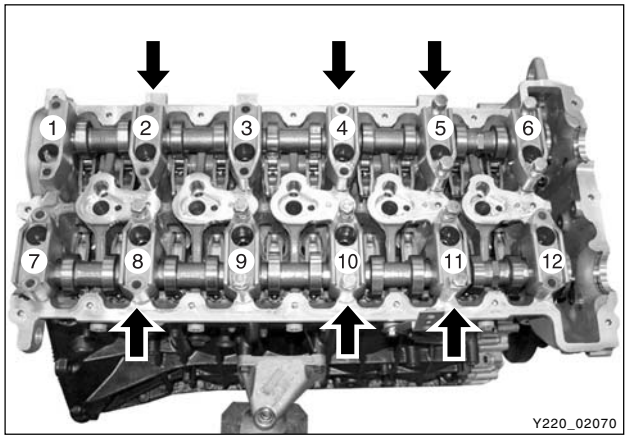

9. Remove the finger follower and the HLA device.

Notice

Avoid contact with hot metal parts when removing the HLA device immediately after stopping the engine.

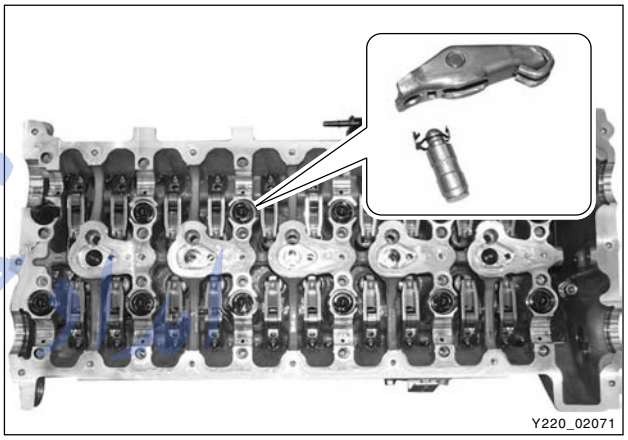

انتشارات خودرو فارما
تلفن شبانه روزی: ۰۲۱-۸۸۸۶۲۰۸۵
FarmaSOS.com

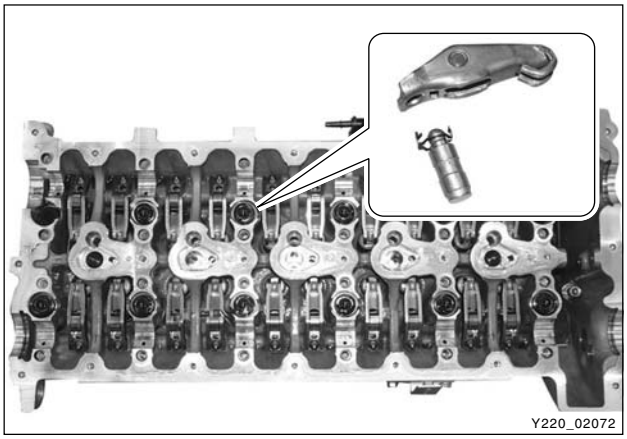

Installation

1. Install the HLA device and finger follower. Check the HLA device with the diagnosis procedures before installation.

Notice

- ***Put the cylinder head on the locating pins.***

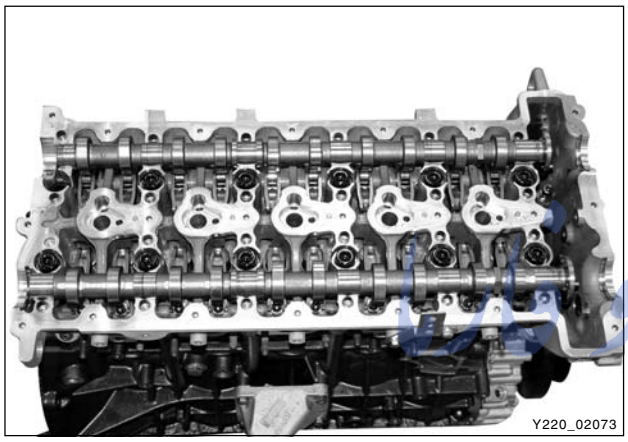

2. Place the bearing cap with the OT marks on both camshafts facing upward.

Notice

- ***Apply the sealant on the cap (#12) for the vacuum pump when installing.***
- ***Apply the oil on the bearing journals before installation.***

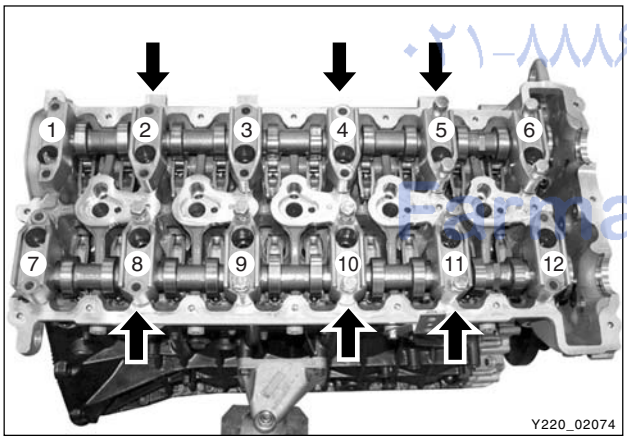

3. Tighten the camshaft bearing cap bolts.
   - Intake: #2, #4, #5
   - Exhaust: #8, #10, #11

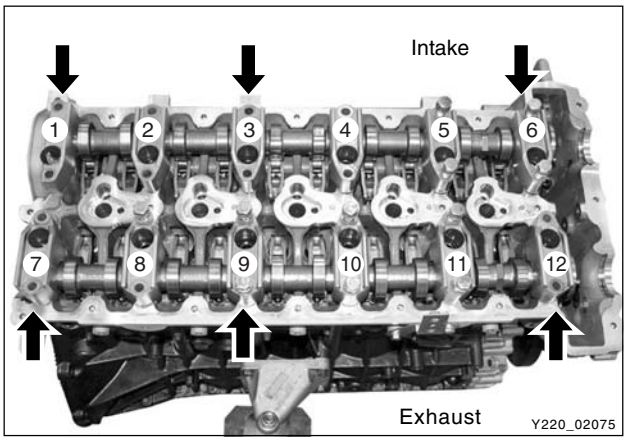

- Intake: #1, #3, #6
- Exhaust: #7, #9, #12

Tightening torque	25 Nm

Notice

Check the finger follower positions and align if needed.

امداد خودرو
۰۲۱-۸۸۸۶۲۰۸۵
EsaraSOS.com

4. Install the intake and exhaust camshaft sprockets and the timing chain.

Tightening torque	25 Nm + 90° + 10°

Notice

- ***If the sprocket bolt is stretched over 0.9 mm, replace it with new one.***
- ***Always install the intake camshaft sprocket first.***
- ***Ensure that the markings on camshaft sprocket and timing chain are aligned.***
- ***Make sure that the timing chain is securely seated on the guide rail.***

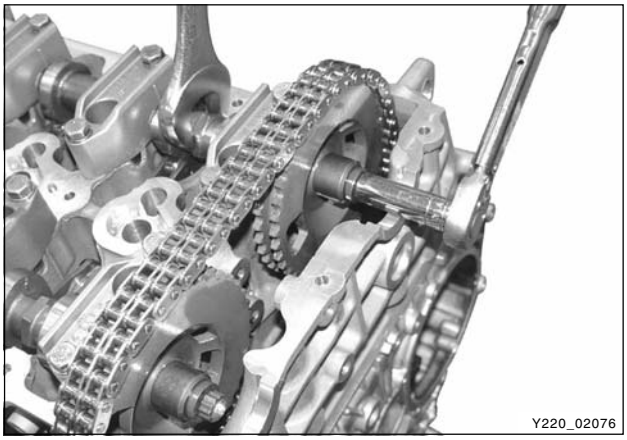

5. Rotate the crankshaft pulley two revolutions and ensure that the OT mark on the crankshaft pulley and the OT mark on the camshaft pulley are aligned.

Notice

If the markings are not aligned, reinstall the cylinder head.

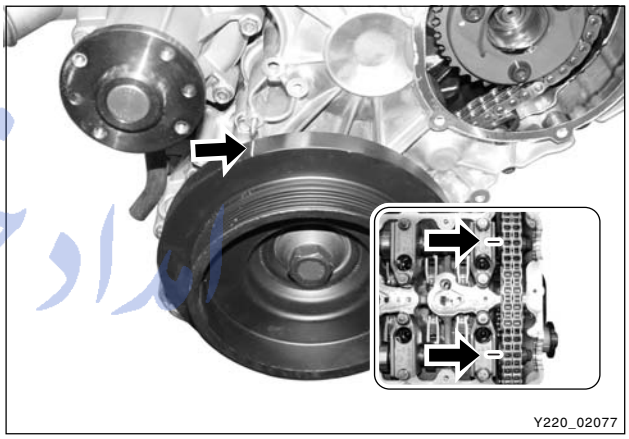

6. Install the chain tensioner.

Tightening torque	80 ± 8.0 Nm

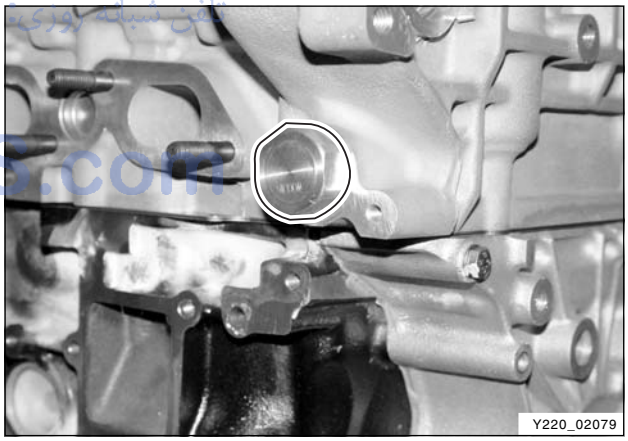

ایداد خودرو فارما
۰۲۱-۸۸۸۶۲۰۸۵
FarmaSOS.com

▶ Special Tools and Equipment

Name and Part Number	Application
HLA remover  Y220_02080	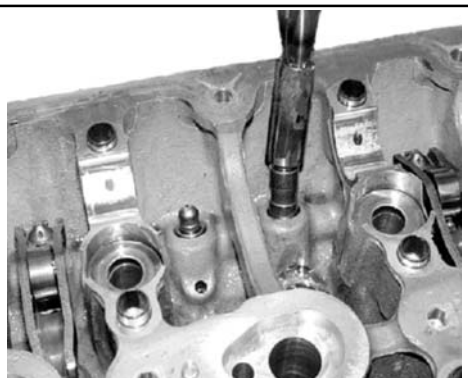 Y220_02081
Stem seal drift 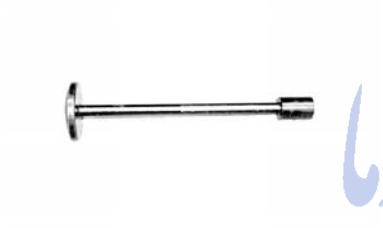 Y220_02082	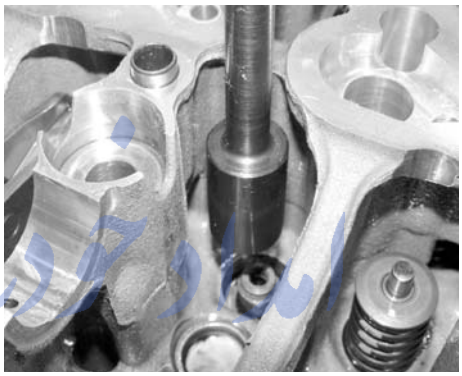 Y220_02083

امداد خودرو فارما
تلفن شبانه روزی: ۰۲۱-۸۸۸۶۲۰۸۵
FarmaSOS.com

TIMING CHAIN ASSEMBLY

▶ Chain Drive System

System Layout

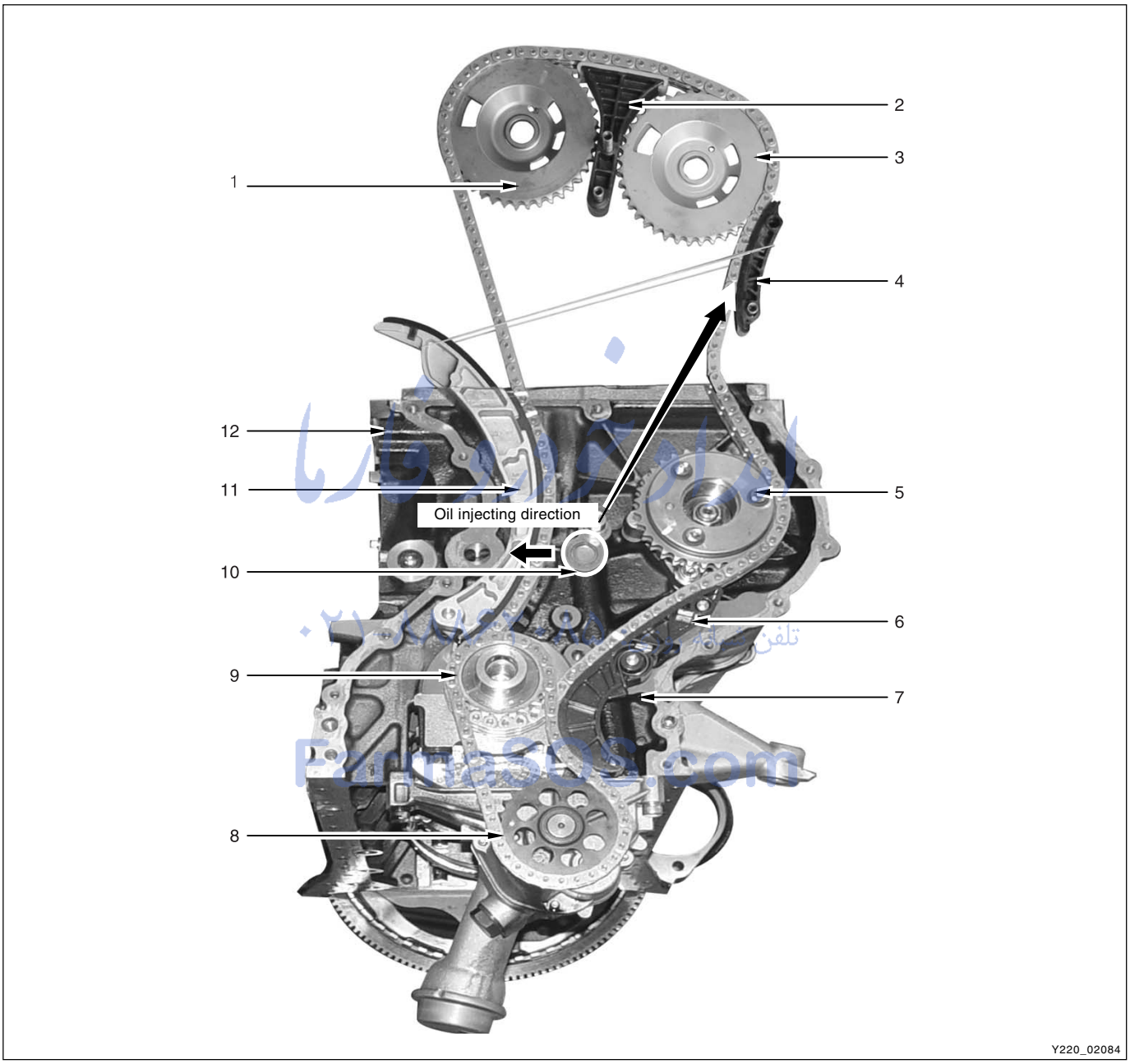

1. Exhaust camshaft sprocket
2. Upper guide rail
3. Intake camshaft sprocket
4. Clamping guide rail
5. HP pump sprocket
6. Lower guide rail
7. Oil pump tensioner
8. Oil pump sprocket
9. Crankshaft sprocket
10. Oil nozzle
11. Tensioner guide rail
12. Chain tensioner

CHANGED BY	
EFFECTIVE DATE	
AFFECTED VIN	

Chain

- Chain type: Double Bush
- Pitch: 9.525 mm
- Load limits: 19,000 N
- No. of links: 144 EA
- Overall length: 1371.6 mm
- Replace when the chain is extended by 0.5 % from overall length (Replace if extended by over 6.858 mm)

Chain tensioner

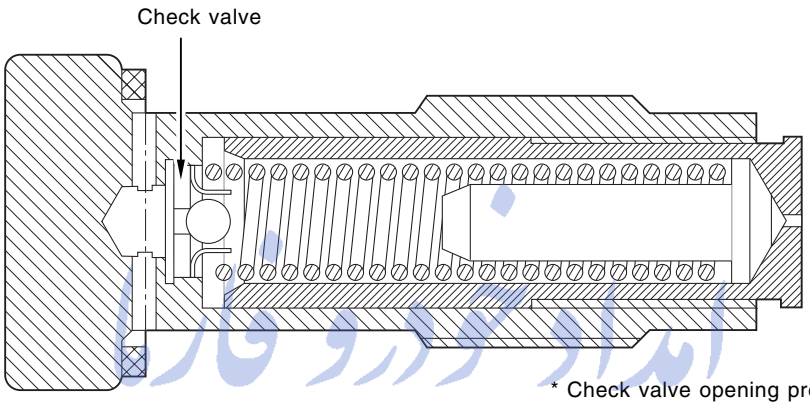

* Check valve opening pressure: 0.2 ~ 0.5 bar

Y220_02085

The major function of tensioner is optimizing the movement of chain drive system by using spring constant and oil pressure in the tensioner.

The tensioner performs function of adjusting chain tension to be always tight, not loose, while engine running. By doing so, can reduce wears of each guide rail and sprocket.

Tightening torque	65 ± 5.0 Nm (Installed on the cylinder head)

تلفن شبانه روزی: ۰۲۱-۸۸۸۶۲۰۸۵
FarmaSOS.com

Guide rail

Guide rail is used to optimize the movement of chain drive system like tensioner.

Guide rail can prevent chain slap when chain is extended and reduce chain wears.

Guide rail is needed especially when the distance between the sprockets are too long.

The material is plastic.

- Location of guide rail
  - Tensioner guide rail: Between crankshaft sprocket and exhaust camshaft sprocket
  - Upper guide rail: Between exhaust camshaft sprocket and intake camshaft sprocket
  - Clamping guide rail: Between intake camshaft sprocket and HP pump sprocket
  - Lower guide rail: Between HP pump sprocket and crankshaft sprocket

Timing setting

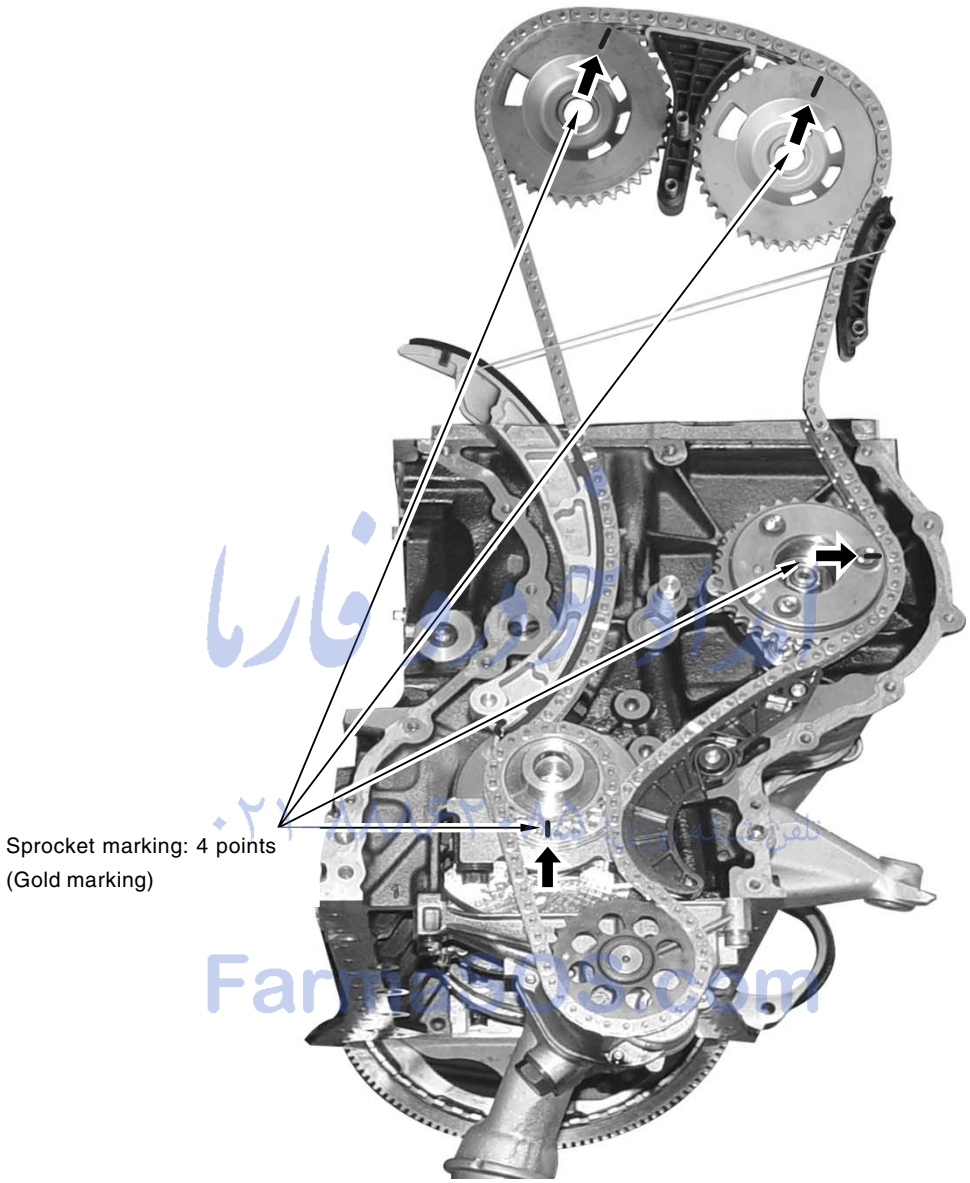

<Timing marking points on chain>

Y220_02086

- Check marking links on the chain (Gold marking)
- Locate a point with two continuous marking links and align it to a marking on crankshaft sprocket (△)
- Align respective marking link to each camshaft sprocket (intake and exhaust) marking (△)
- Align another marking link to HP pump sprocket marking (△)

CHANGED BY	
EFFECTIVE DATE	
AFFECTED VIN	

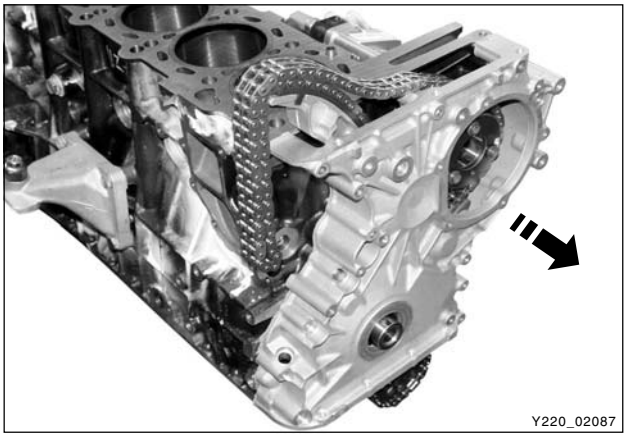

Removal and Installation

1. Remove the cylinder head assembly.
2. Remove the oil pan.
3. Remove the chain guide rail with a sliding hammer.
4. Remove the chain cover.

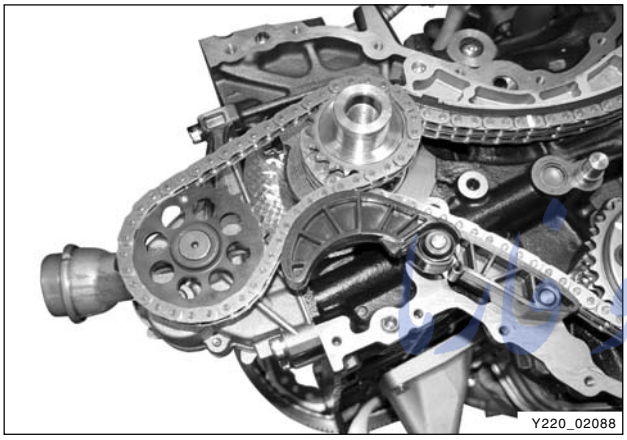

5. Remove the oil pump drive chain.
6. Remove the upper guide rail while pushing the retaining spring with a screwdriver.
7. Remove the lower guide rail.
8. Remove the oil pump drive chain.

امداد خودرو فارما
تلفن شبانه روزی: ۰۲۱-۸۸۸۶۲۰۸۵
FarmaSOS.com

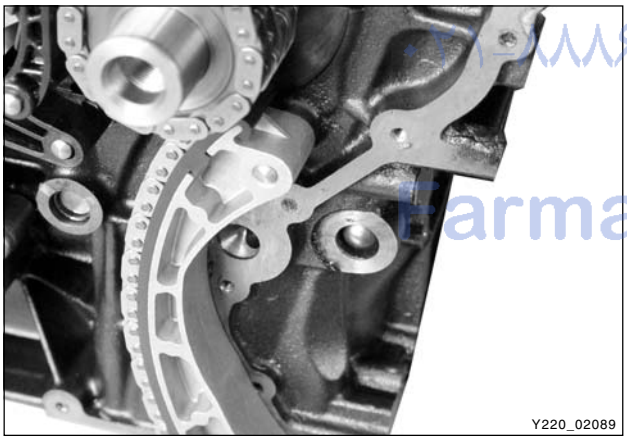

9. Remove the tensioning guide rail.

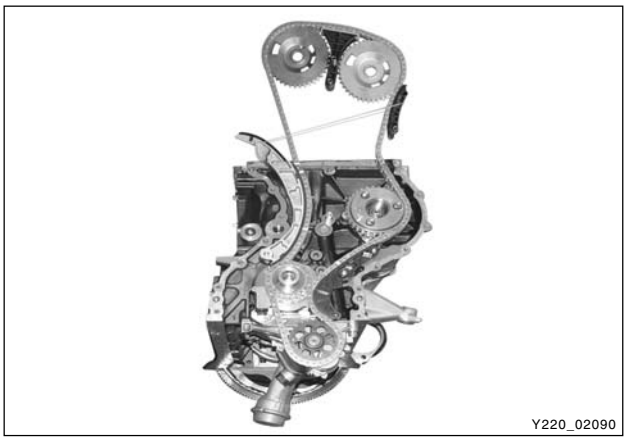

10. Remove the timing chain.
11. Install in the reverse order of removal.

* Thoroughly clean the removed components before installing.

CYLINDER BLOCK

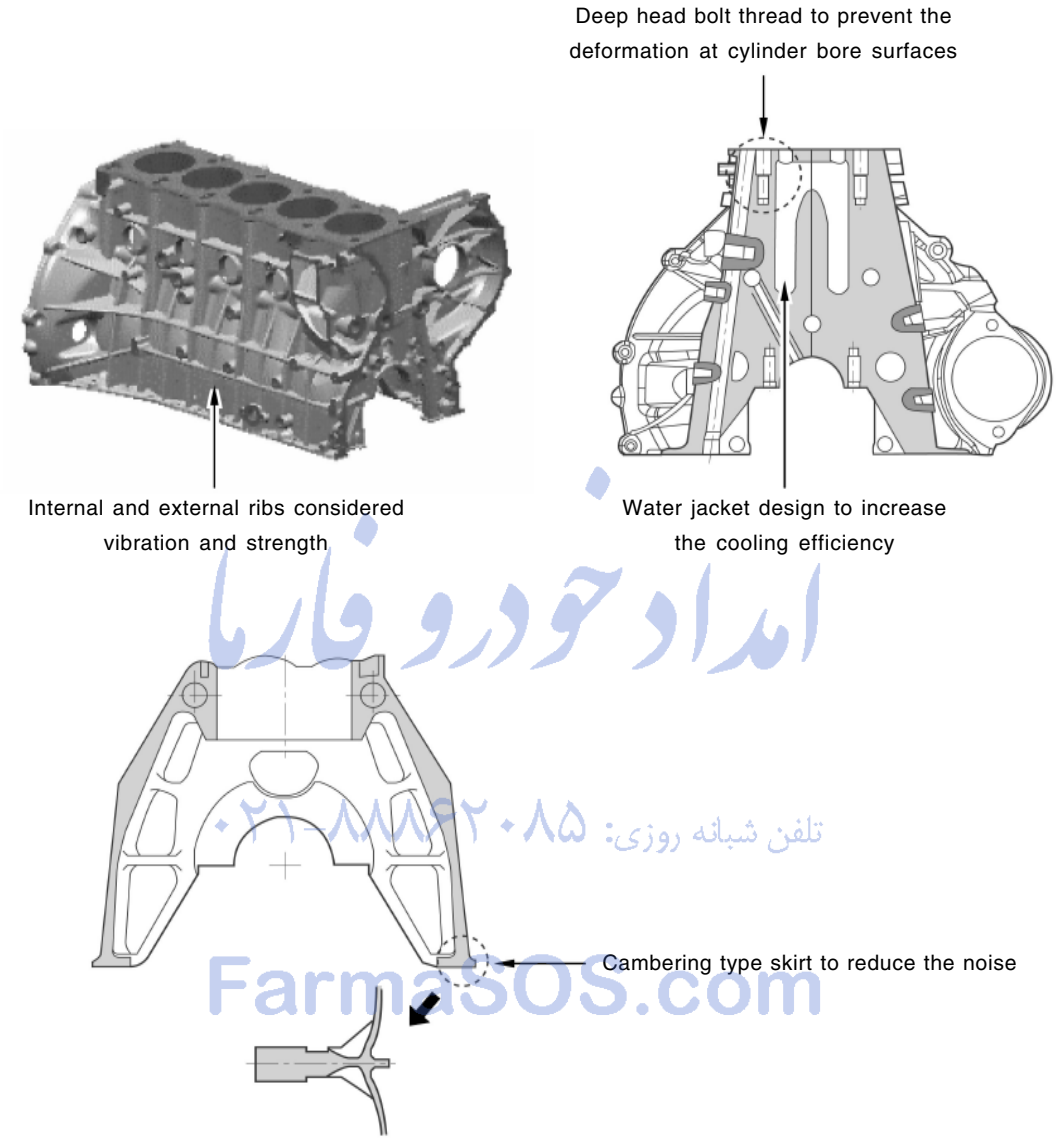

Y220_02091

امداد خودرو فارما
تلفن شبانه روزی: ۰۲۱-۸۸۳۴۲۰۸۵
FarmaSOS.com

▶ System Characteristics

- Rib design by considering strength against engine vibrations and weight
- Cambering type skirt design on case housing wall to reduce the engine noise
- Water jacket design to increase the cooling efficiency of cylinder bore bridge
- Deep head bolt thread to prevent the deformation at cylinder bore surfaces
- Reinforcement of strength
  - Main bearing housing / Main bearing cap
  - Extended main bearing cap bolt
- Reducing the noise, vibration and harshness (NVH)
  - Minimize the vibration by adding external ribs
  - Adding the ribs around oil pan parting surface

CHANGED BY	
EFFECTIVE DATE	
AFFECTED VIN	

▶ Knock Sensor

Two knock sensors are located on the cylinder block (intake manifold side).
To detect engine vibration under abnormal combustion, knock sensor has piezoelectric element fixed on the vibration plate and this vibration plate is fixed on the base. If happens knocking, pistons or connecting rods vibrate and occurs heavy sounds that hit metal. Knock sensor is used to detect those knockings caused by abnormal combustions. It controls idling stabilities and turns on the engine warning light when detects injector damages. And also controls pilot injection very precisely during MAP learning.
When knock sensor is defective, engine ECU corrects injection timing based on MAP values like engine speed, intake air volume and coolant temperature.

※ Before checking the knock sensor unit, be sure to check the tightening torque of the sensor and connector connecting conditions.

Insulating resistance	Min. 1MΩ
Resonance frequency	25 kHz
Operating temperature	- 40 ~ 150°C
Output voltage	26 ± 8 mV/g (at 5 kHz)
	22 ~ 37 mV/g (3 ~ 10 kHz)
	22 ~ 57 mV/g (10 ~ 20 kHz)
Tightening torque	20 ± 5 Nm

امداد خودرو فارما
شبانه روزی: ۰۸۵
FarmaRoOS.com

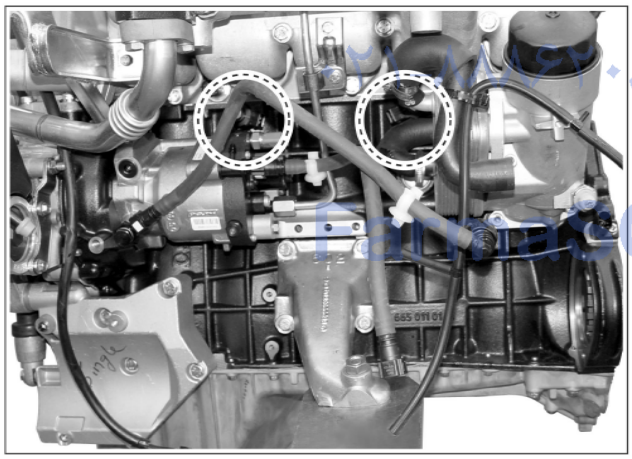



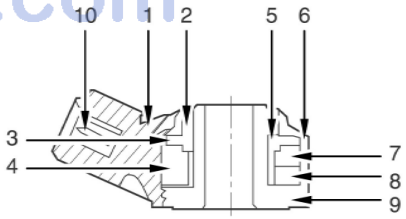

<Location of knock sensor>

Y220_02092

1. Sensor housing
2. Nut
3. Disc spring
4. Weight
5. Insulation disc
6. Upper contact plate
7. Piezo element
8. Lower contact plate
9. Body
10. Terminal
11. Resister

Notice

The knock sensor should be tightened with the specified tightening torque. Otherwise, the engine output may be decreased and the "ENGINE CHECK" warning lamp may come on. The internal resistance of the sensor is approx. 4.7 kΩ.

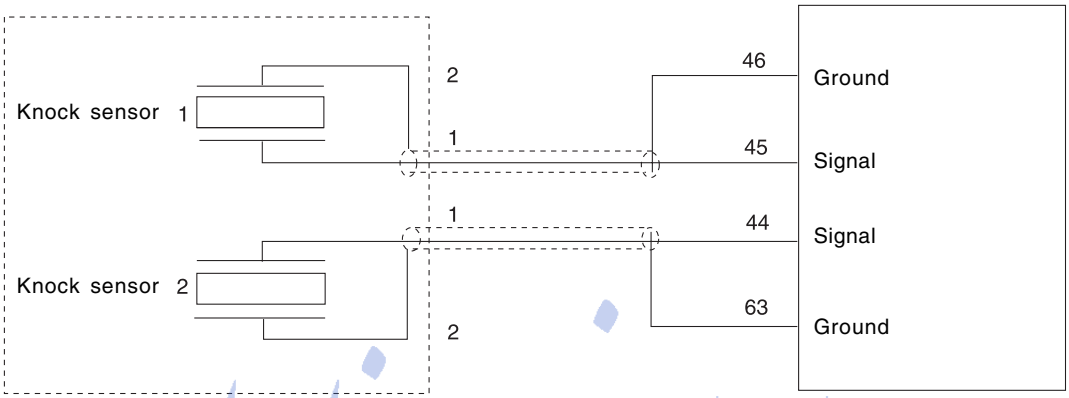

<Circuit diagram of knock sensor>

Y220_02093

امداد خودرو فارما
تلفن شبانه روزی: ۰۲۱-۸۸۸۶۲۰۸۵
FarmaSOS.com

CRANKSHAFT

※ Preceding Works: Removal of end cover
Removal of pistons
Removal of crankshaft sprocket

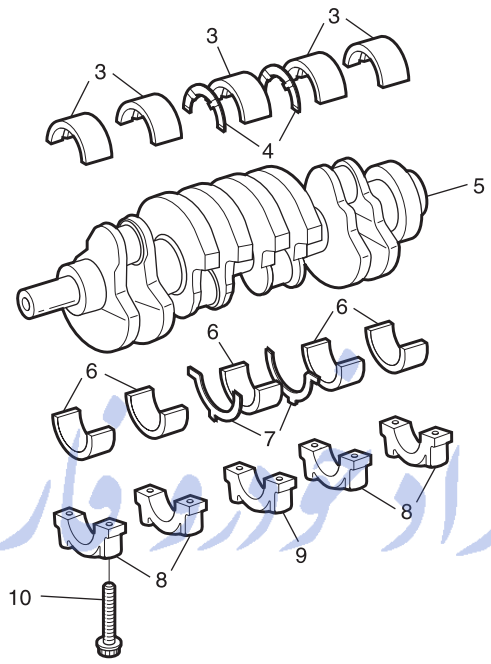

Y220_02094

امداد خودرو فارما
تلفن شبانه روزی: ۰۲۱-۸۸۸۶۲۰۸۵
FarmaSOS.com

3. Crankshaft main bearing shells, upper
4. Upper thrust bearing
5. Crankshaft
6. Crankshaft main bearing shells, lower
7. Lower thrust bearing
8. Crankshaft main bearing cap
9. Crankshaft thrust bearing cap
10. 12-sided stretch bolt ..... 55 ± 5.0 Nm, 90° + 10°

ARRANGEMENT OF THRUST WASHERS AND BEARINGS

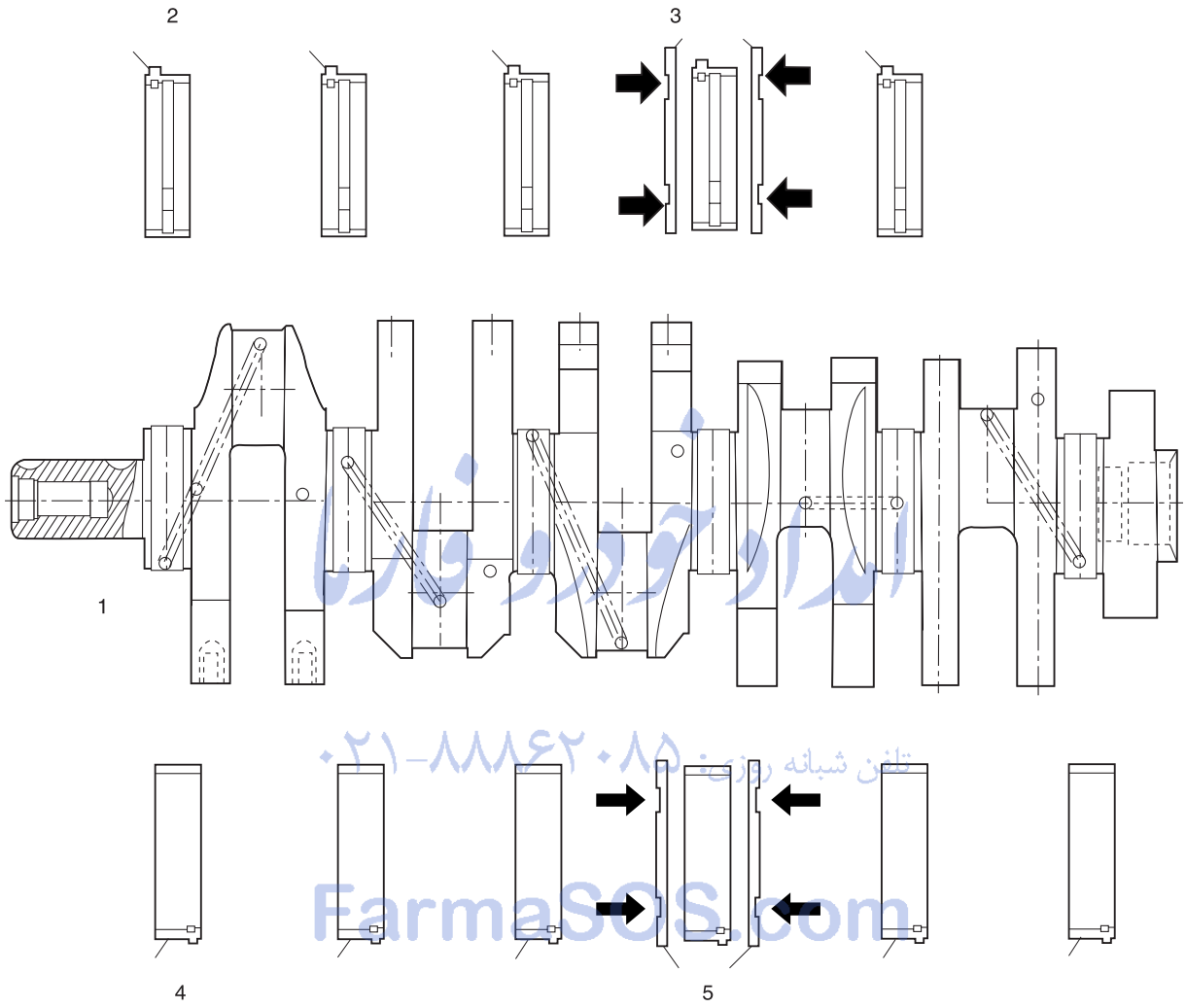

1. Crankshaft
2. Crankshaft main bearing shells, upper
3. Upper thrust bearing
4. Crankshaft main bearing shells, lower
5. Lower thrust bearing

FarmaSOS.com

Notice

The clearance between bearing shell and bore and between bearing shell and journal are various. Refer to the table on next page to select bearings when installing.

▶ Dimensions of Crankshaft Main Bearing

(mm)

Color	Crankshaft Journal	Upper Main Bearing	Lower Main Bearing
Blue	57.965 ~ 57.960	2.260 ~ 2.255	2.260 ~ 2.255
Yellow	57.960 ~ 57.955	2.265 ~ 2.260	2.265 ~ 2.260
Red	57.955 ~ 57.950	2.270 ~ 2.265	2.270 ~ 2.265
White	57.950 ~ 57.945	-	2.275 ~ 2.270
Violet	57.945 ~ 57.940	-	2.280 ~ 2.275

▶ Bearing Clearance

(mm)

Description		Crankshaft Bearing	Thrust Bearing
Radial clearance	When new	0.027 ~ 0.051	0.026 ~ 0.068
	Wear limit	Max. 0.070	Max. 0.080
Axial clearance	When new	0.100 ~ 0.254	-
	Wear limit	Max. 0.300	-

▶ Matching the Fit Bearing Journal Width to Thrust Washers

(mm)

Fit bearing Journal Width	Thrust Washer Thickness
24.500 ~ 24.533	2.15
24.600 ~ 24.633	2.20
24.70 ~ 24.733	2.25
24.900 ~ 24.933	2.35
25.000 ~ 25.033	2.40

ایران خودرو فارما
تلفن شبانه روزی: ۰۲۱-۸۸۸۶۲۰۸۵
FarmaSOS.com

Notice

- ***Measure the crankshaft axial clearance and correct if necessary with appropriate thrust washers.***
- ***Thrust washers of the same thickness must be installed on both sides of the fit bearing.***

▶ Matching the Crankshaft Bearing Shells to Basic Bearing Bore in Crankcase

Marking of Basic Bearing Bore in Lower Parting Surface	Relevant Crankshaft Bearing Shell With Color Coding
1 punch mark or blue	blue or white - blue
2 punch marks or yellow	yellow or white - yellow
3 punch marks or red	red or white - red

▶ Matching Crankshaft Bearing Shells to Basic Bearing Journal of Crankshaft

Marking of Bearing journals on Crank Webs	Relevant Crankshaft Bearing Shell With Color Coding
blue or white - blue	blue or white - blue
yellow or white - blue	yellow or white - yellow
red or white - blue	red or white - red

▶ Selection of Upper Main Bearing Shell

Punch Mark	Color
•	Blue
• •	Yellow
• • •	Red

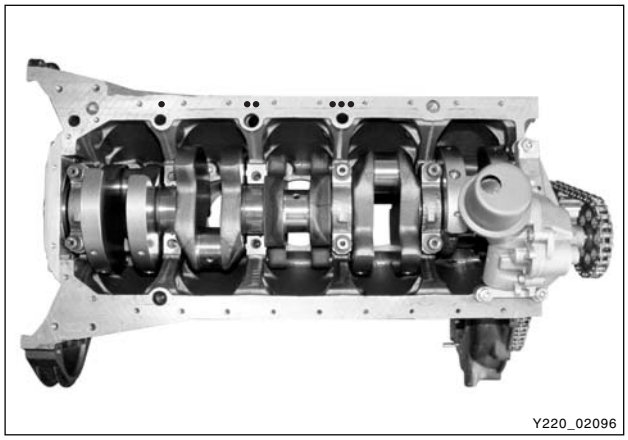

▶ Selection of Lower Main Bearing Shell

Mark	Color
B	Blue
Y	Yellow
R	Red
W	White
V	Violet

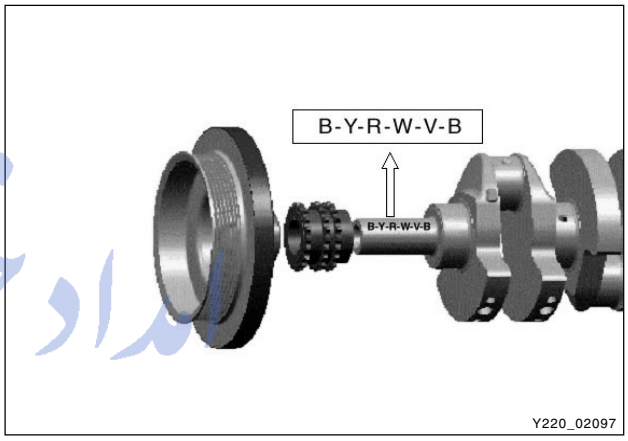

امداد خودرو فارما
تلفن شبانه روزی: ۰۲۱-۸۸۸۶۲۰۸۵
FarmaSOS.com

CHANGED BY	
EFFECTIVE DATE	
AFFECTED VIN	

▶ Crankshaft Position Sensor

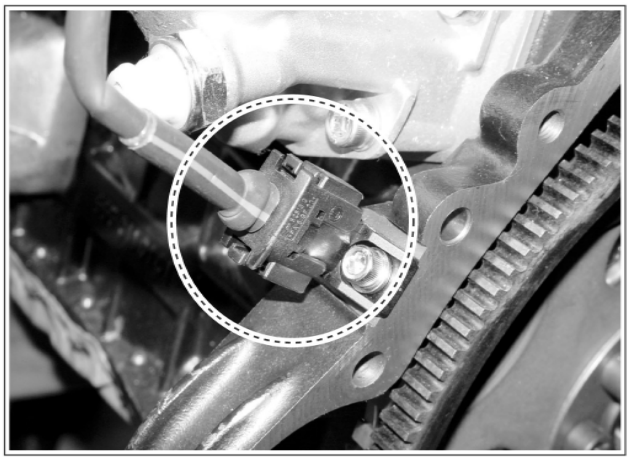

<Location of crankshaft position sensor>

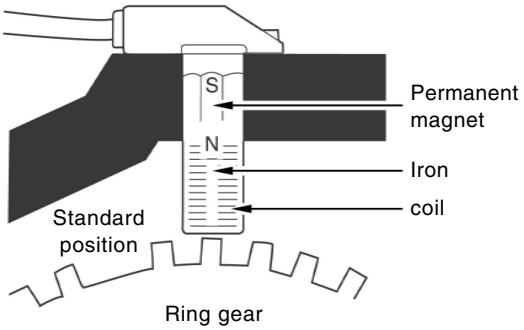

<Structure of crankshaft position sensor>

Y220_02098

The crankshaft position sensor is located near to flywheel on the rear of cylinder block. It generates AC voltage between increment type driven plate that fixed on flywheel inside. The sensor consists of soft iron core that winded copper wire on permanent magnet and generates sign wave AC voltage when magnetism on the sensor wheel passes the sensor.

When the crankshaft rotates, '+' signal will be generated from near the front edge and '-' signal will be generated from near the rear edge among teeth on the driven plate near to crankshaft position. The AC voltage increases as the engine speed increases, however, no signal occurs from the 2-missing-tooth on the increment type driven plate. By using these teeth, ECU recognizes TDC of No. 1 and 5 cylinders.

ECU converts the alternative signals into digital signals to recognize crankshaft position, piston position and engine speed. The piston position that coupled with crankshaft is main factor in calculating injection timing. By analyzing the reference position and camshaft position sensor, can recognize No. 1 cylinder and calculate the crankshaft speed.

FarmaSOS.com

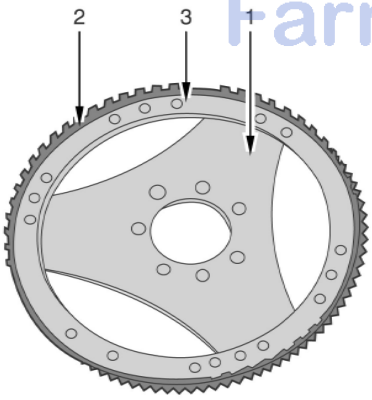

<Drive plate>

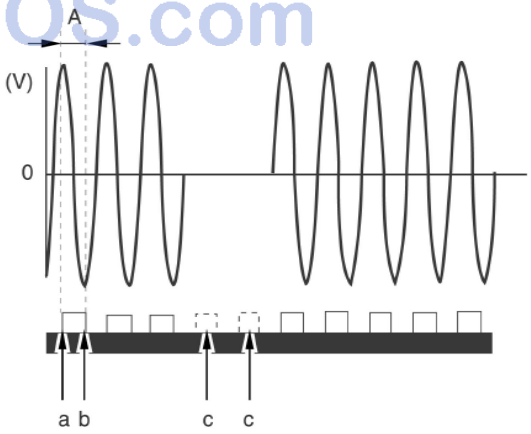

Y220_02099

A. Distance between '+' max. voltage and '-' max. voltage

a. Front edge
b. Rear edge
c. 2-missing-tooth

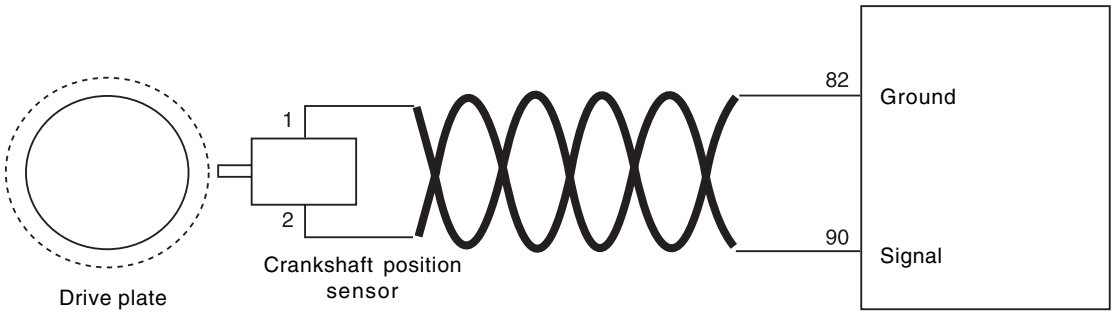

<Circuit diagram of crankshaft position sensor>

Y220_02100

Output voltage (1 ~ 150 V)	Min. voltage: 1.0 V (40 rpm, air gap: 1.3 mm)
	Max voltage: 150 V (7000 rpm, air gap: 0.3 mm)
Sensor unit coil resistance (Ω)	1,090 ± 15 %
Sensor air gap	0.3 ~ 1.5 mm
Operating temperature	- 40 ~ 150°C
Tightening torque	6 ~ 8 Nm

ایران خودرو فارما
تلفن شبانه روزی: ۰۲۱-۸۸۸۶۲۰۸۵
FarmaSOS.com

TORSIONAL VIBRATION DAMPER

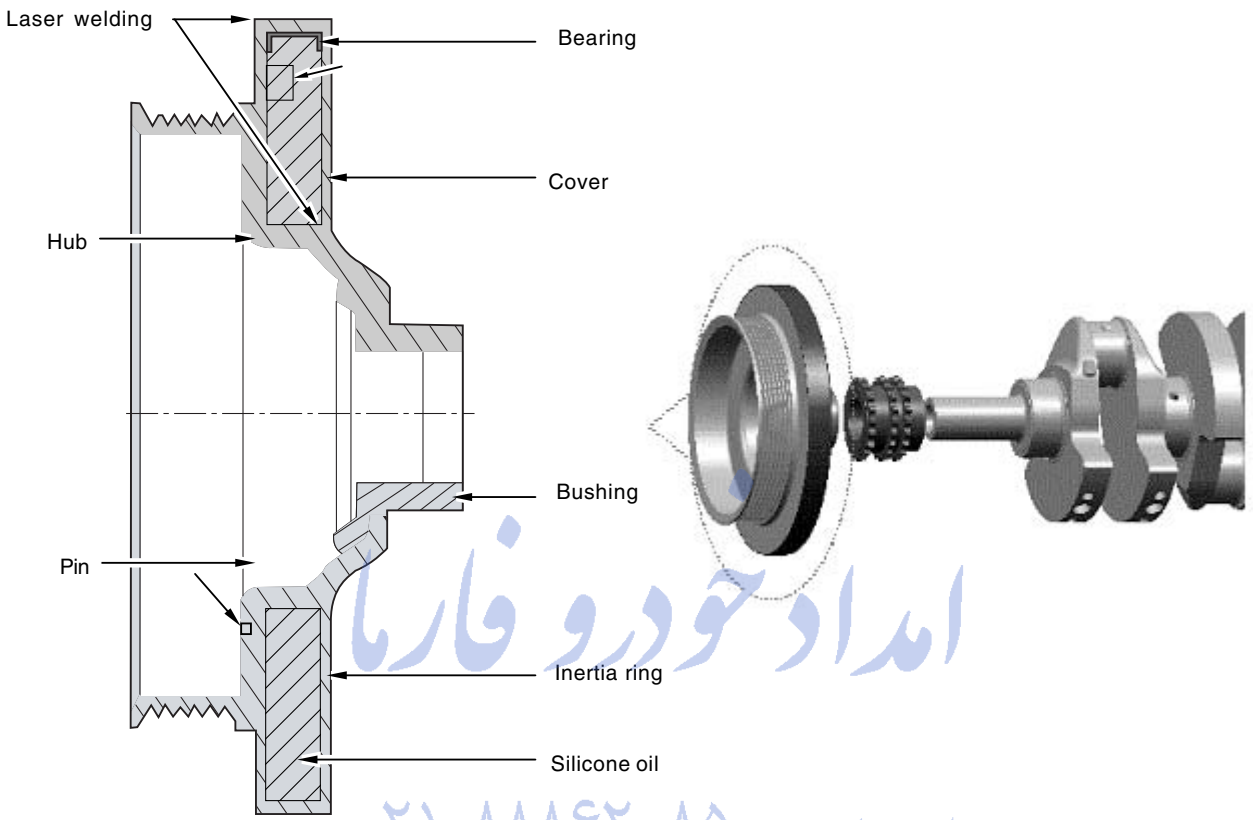

امداد خودرو فارما
تلفن شبانه روزی: ۰۲۱-۸۸۸۶۲۰۸۵
FarmaSOS.com

▶ System Description

- Components: Hub, inertia mass, cover, bearing, bushing, silicon oil
- Functions: The crankshaft pulley optimizes the drive system by reducing the amount of torsional vibration in crankshaft. Conventional rubber damper is limited in changing materials (rubbers) to absorb vibration, but this crankshaft pulley (viscous damper), using silicon oil, takes advantage of less changing viscosity according to the temperature.

Crankshaft - Disassembly

1. Unscrew the bolts and remove the connecting rod journal bearing and bearing caps.

Notice

Position the #1 piston at TDC and remove the piston connecting rod journal bearing caps.

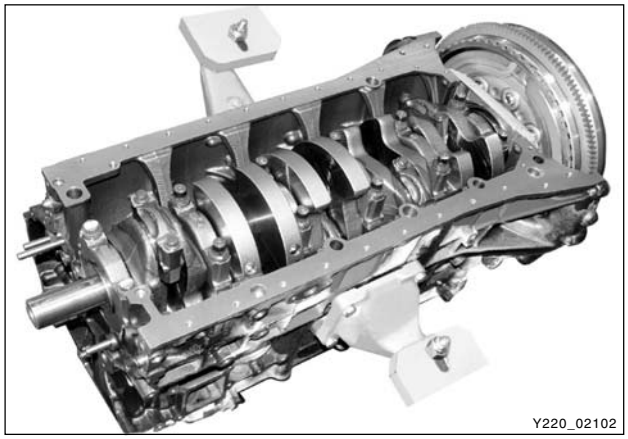

2. Remove the bearing cap bolts.
3. Remove the bearing caps.

Notice

- ***The crankshaft bearing caps are marked with stamped numbers. Start to remove from the crankshaft pulley side.***
- ***Do not mix up the bearing shells.***

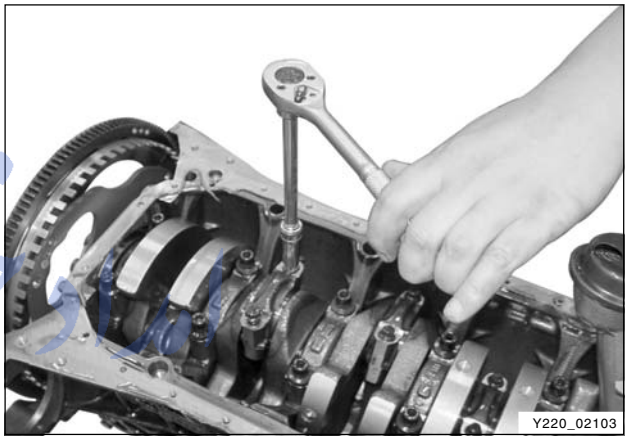

4. Remove the bearing caps and lower thrust bearing.
5. Separate the lower bearing shells from the bearing caps.

6. Remove the crankshaft.

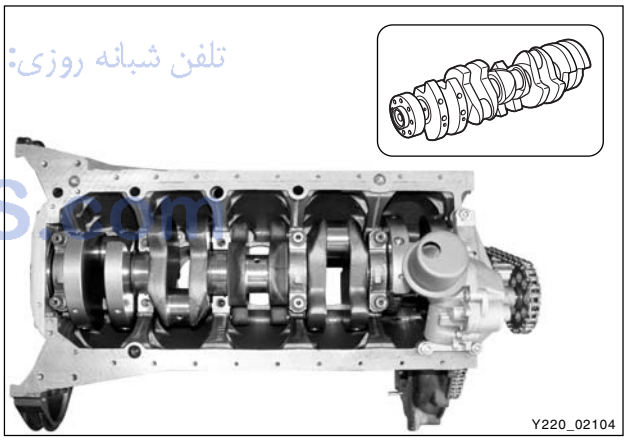

7. Remove the upper thrust washers.
8. Remove the upper bearing shells from the crankcase.

Notice

Do not mix up the bearing shells.

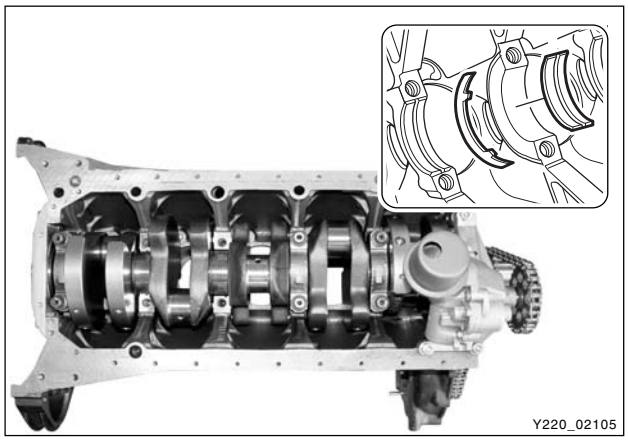

اداره خودرو فارس
تلفن شبانه روزی: ۰۲۱-۸۸۸۶۲۰۸۵
FarmaSOS.com

CHANGED BY	
EFFECTIVE DATE	
AFFECTED VIN	

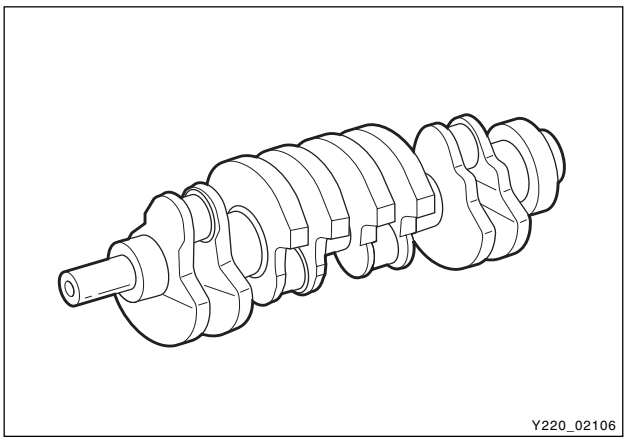

Crankshaft - Reassembly

1. Thoroughly clean the oil galleries and check the journal section and bearings. Replace if necessary.

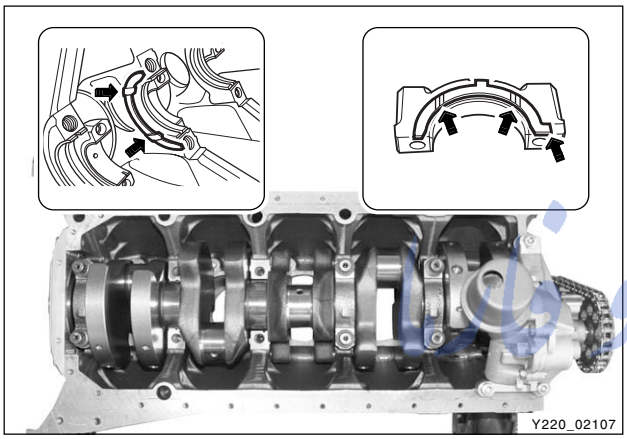

2. Coat the upper thrust washers with oil and insert into the crankcase so that the oil grooves are facing the crank webs (arrow).
3. Coat the lower thrust washers with oil and insert into the crankcase so that the oil grooves are facing the crank webs (arrow).

Notice

The retaining lugs should be positioned in the grooves (arrow).

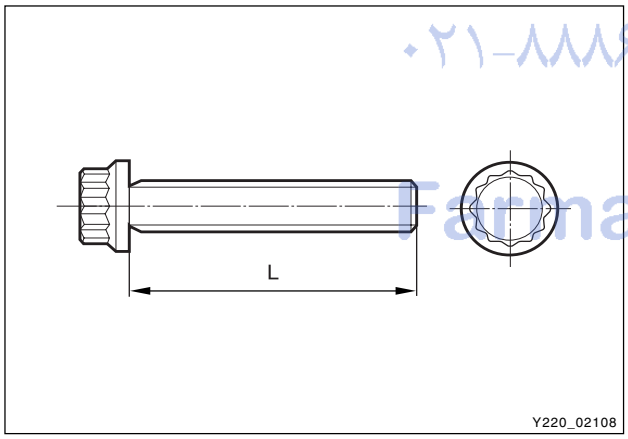

Notice

If the maximum permissible length of L= 63.8 mm is exceeded, the 12-sided stretch bolts should be replaced.

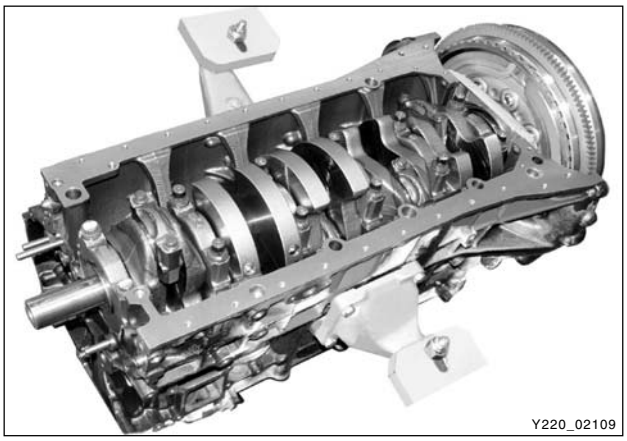

4. Coat the new crankshaft with engine oil and place it on the crankcase.
5. Install the crankshaft bearing caps according to the markings and tighten the bolts.

Tightening torque	55 ± 5 Nm + 90° + 10°

Notice

Install from #1 cap.

۰۲۱-۸۸۸۶۲۰۸۵ تلفن شبانه روزی
FarnaSOS.com

6. Position the #1 piston at TDC and install the crankshaft.
7. Install the piston connecting rod journal to the crankshaft journal and tighten the bolts.
8. Measure the crankshaft bearing axial clearance.
   - When new: 0.100 ~ 0.245 mm
   - When used: 0.300 mm
9. Rotate the crankshaft by hand and check whether it rotates smoothly.

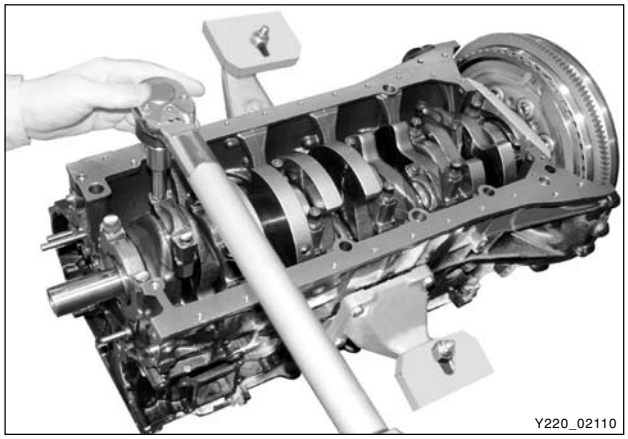

امداد خودرو فارما
تلفن شبانه روزی: ۰۲۱-۸۸۸۶۲۰۸۵
FarmaSOS.com

CHANGED BY	
EFFECTIVE DATE	
AFFECTED VIN	

FLYWHEEL

DUAL MASS FLYWHEEL (DMF, MANUAL TRANSMISSION EQUIPPED VEHICLE)

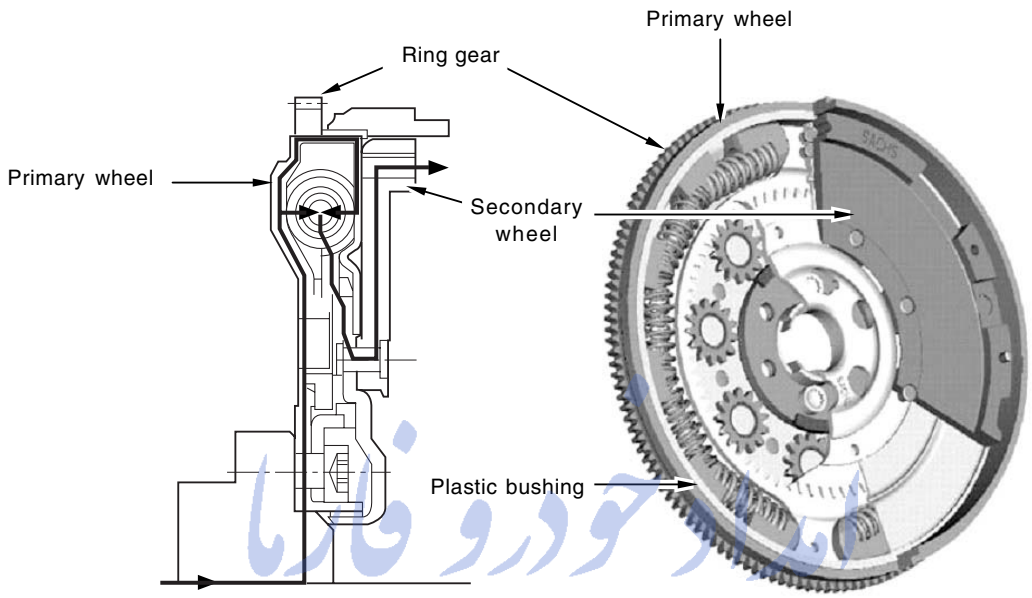

Y220_02111

تلفن شبانه روزی: ۰۲۱-۸۸۸۶۲۰۸۵

▶ System Description

This flywheel is installed to the rear end of crankshaft and transfers the output from the engine to the power train mechanism. When starting the engine, this drive the crankshaft train mechanism initially by using the power from the start motor. Also, DMF measure the crankshaft speed, sends the signals to ECU, and controls the ignition timing.

FarmaSOS.com



Conventional flywheel DMF

Y220_02147

▶ Structure

Function and characteristics

- When the output changes from the engine is high during power stroke (①): The damper absorbs the shocks to reduce the changes to transmission.
- When the output changes from the engine is low during compression stroke (②): The damper increases the torque changes to clutch.

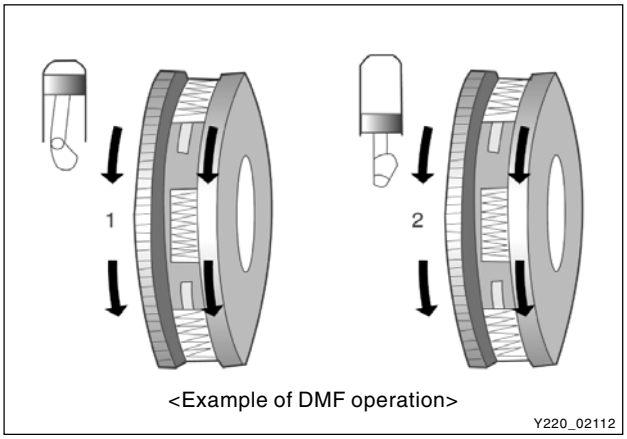

<Example of DMF operation>
Y220_02112

<Torque change curve of engine and drive shaft>

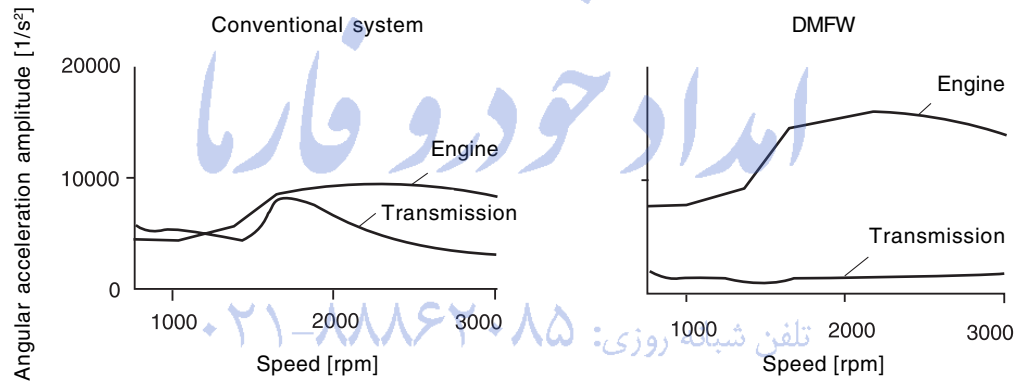

Y220_02113

ایداد خودرو فارما
۰۲۱-۸۸۶۲۰۸۵ تلفن شبانه روزی:
FarmaSOS.com

▶ System Characteristics

Function

- Filters irregularities of engine: The secondary flywheel operates almost evenly so does not cause gear noises
- The mass of the primary flywheel is less than conventional flywheel so the engine irregularity increases more (less pulsation absorbing effect)
- Transmission protection function: Reduces the load to powertrain (transmission) by blocking the irregularity of engine

Characteristics of DMF

- Reduced vibration noise from the powertrain by blocking the torsional vibrations
- Enhanced vehicle silence and riding comforts: reduced engine torque changes
- Reduced shifting shocks
- Smooth acceleration and deceleration

Advantages of DMF

- Improved torque response by using 3-stage type spring: Strengthens the torque response in all ranges (low, medium, and high speed) by applying respective spring constant at each range.
- Stable revolution of the primary and secondary wheel by using planetary gear: Works as auxiliary damper against spring changes
- Less heat generation due to no direct friction against spring surface: Plastic material is covered on the spring outer surface
- Increased durability by using plastic bushing (extends the lifetime of grease)

CHANGED BY	
EFFECTIVE DATE	
AFFECTED VIN	

PISTON AND CONNECTING ROD

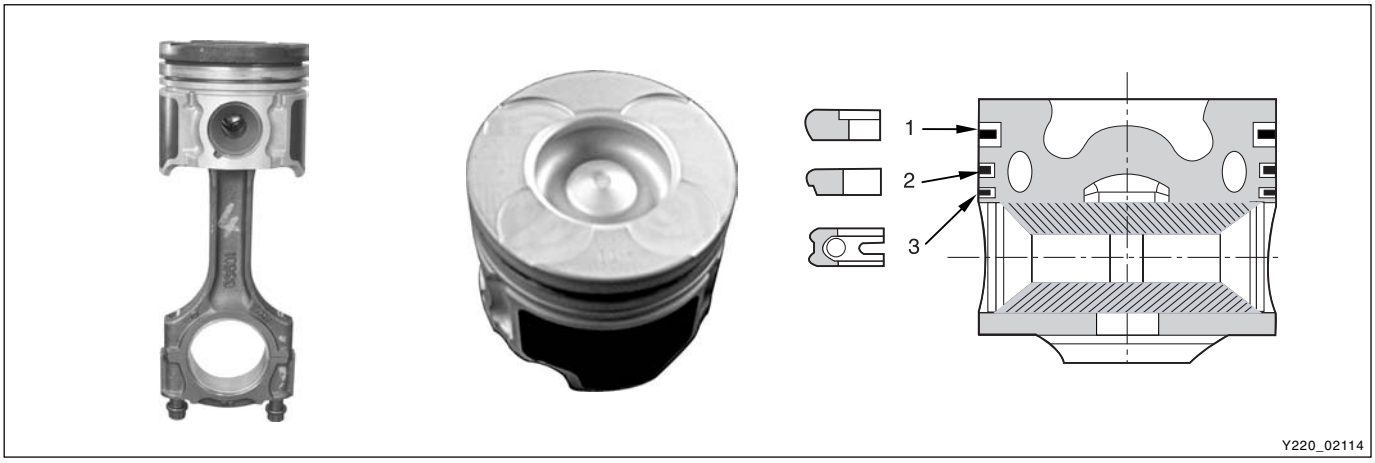

1. Piston
2. No.1 compression ring
3. No.2 compression ring
4. Oil ring
5. Piston pin
6. Snap ring

امداد خودرو فارما
۰۲۱-۸۸۸۶۲۰۸۵ تلفن شبانه روزی
FarmaSOS.com

Description	D27 DT ENG
Cylinder bore diameter	ϕ 86.2 $^{(0\sim0.018)}$ mm
Piston outer diameter (D1)	ϕ 86.133 $^{(\pm0.009)}$ mm
Clearance between bore and piston	74 ㎛
Piston cooling gallery	Applied
Pin offset	N/A
Compression ratio	18 : 1
Length of piston pin	71.2 mm
Material of top ring / coating	Steel / Gas nitride
Tightening torque of connecting rod bolt	40 ± 5.0 Nm, 90° + 10°
Permissible weight difference of connecting rod	4 g
Thickness of connecting rod bearing (Red)	1.806 ~ 1.809 mm
Thickness of connecting rod bearing (Yellow)	1.809 ~ 1.812 mm
Thickness of connecting rod bearing (Blue)	1.812 ~ 1.815 mm

PISTON RING

1. No.1 compression ring
2. No.2 compression ring
3. Oil ring
5. Coil spring and oil control ring
6. Hook spring

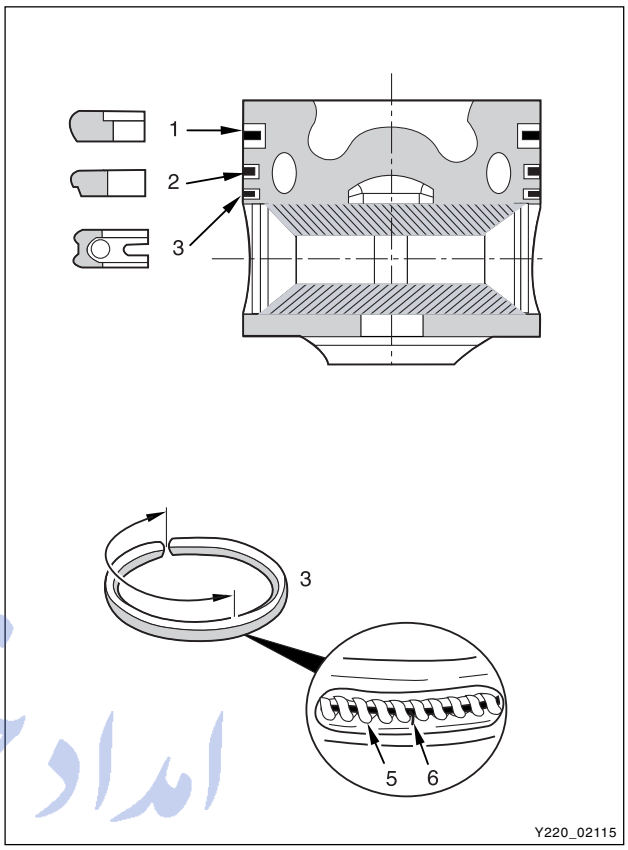

امداد خودرو فارما

▶ Replacement of Piston Ring

تلفن شبانه روزی: ۰۲۱-۸۸۸۶۲۰۸۵
FarmaSOS.com

- Measure piston ring end play.
  - Piston ring end play (mm)
    1st groove: 0.20 ~ 0.35
    2nd groove: 0.20 ~ 0.35
    3rd groove: 0.20 ~ 0.40
  - Clearance between piston ring and piston (mm)
    1st compression ring: 0.075 ~ 0.119
    2nd compression ring: 0.050 ~ 0.090
    3rd oil ring: 0.030 ~ 0.070



- Install the piston so that “Y” marking on piston head is facing in the direction of travel. Arrange the piston ring ends to be 120° apart.
- Adjust the hook spring joint in the oil ring 180 ° away from the ring end.

CHANGED BY	
EFFECTIVE DATE	
AFFECTED VIN	

CYLINDER INNER DIAMETER AND PISTON SIZE

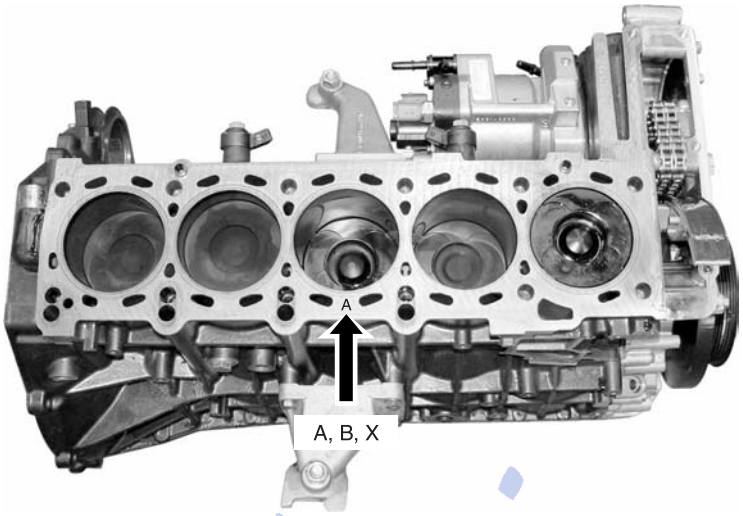

Y220_02117

امداد خودرو فارما

(Unit : mm)

Engine	Code	Used piston	Cylinder Diameter	Piston Diameter
D27DT	A	A or X	86.200 ~ 86.206	86.124 ~ 86.130
	X	A, B or X	86.206 ~ 86.212	86.129 ~ 86.137
	B	B or X	86.212 ~ 86.218	86.136 ~ 86.142
	+ 5	+ 5	86.250 ~ 86.260	86.167 ~ 86.181
	+ 10	+ 10	86.300 ~ 86.310	86.217 ~ 86.231

۰۲۱-۸۸۸۲۰۸۵ تلفن نماینده
FarmaSOS.com

Piston - Reassembly

1. Install the compression ring and oil ring on the piston with a special tool.

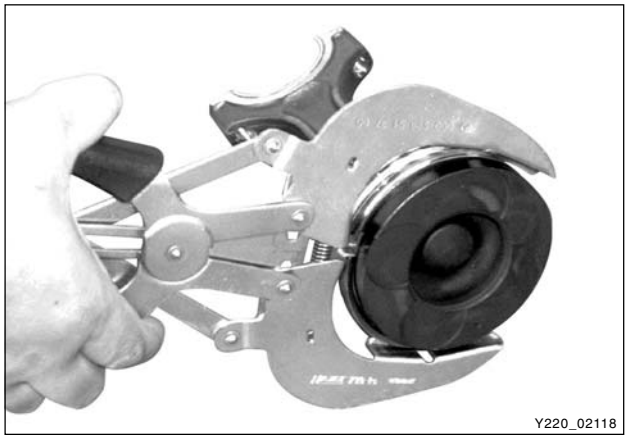
Y220_02118

※ Arrange the piston ring ends to be 120° apart.

Notice

- ***Install the No.1 and No.2 pistons so that "Y" marking on piston head is facing upward.***
- ***No.1 piston ring is thicker than No.2 piston ring.***
- ***Arrange the oil ring end to opposite position of current ring end.***
- ***Oil ring is not directional.***
- ***Make sure that the piston ring end is not aligned to axial direction and lateral direction.***

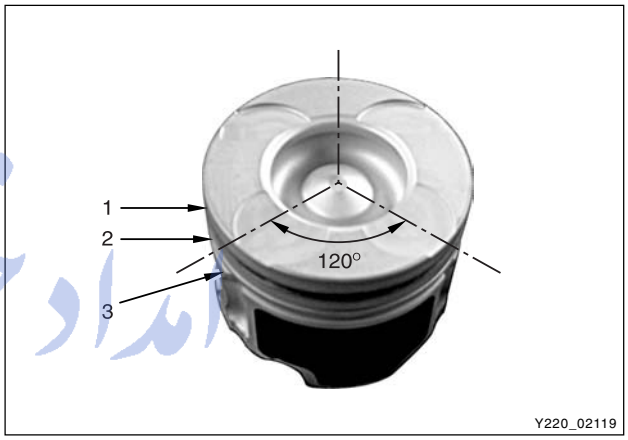

Y220_02119

2. Check the clearance of piston oil ring and compression ring with a thickness gauge and adjust if necessary.

1st groove	0.20 ~ 0.35 mm
2nd groove	0.20 ~ 0.35 mm
3rd groove	0.20 ~ 0.40 mm

* Piston ring end play (mm)

1st groove: 11.0 mm

2nd groove: 10.5 mm

3rd groove: 7.0 mm


Y220_02120

3. Check the clearance of piston rings with a thickness gauge and adjust if necessary.

No.1 compression ring	0.075 ~ 0.119 mm
2nd compression ring	0.050 ~ 0.090 mm
3rd oil ring	0.040 ~ 0.080 mm

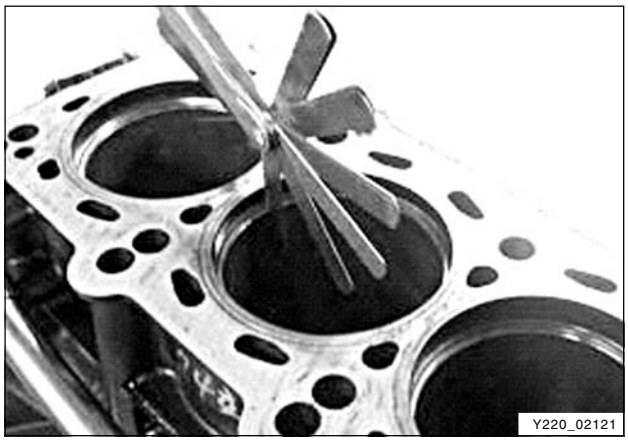
Y220_02121

امداد خودرو فاریا
تلفن شبانه روزی: ۰۲۱-۸۸۸۴۲۰۸۵
FarmaSOS.com

CHANGED BY	
EFFECTIVE DATE	
AFFECTED VIN	

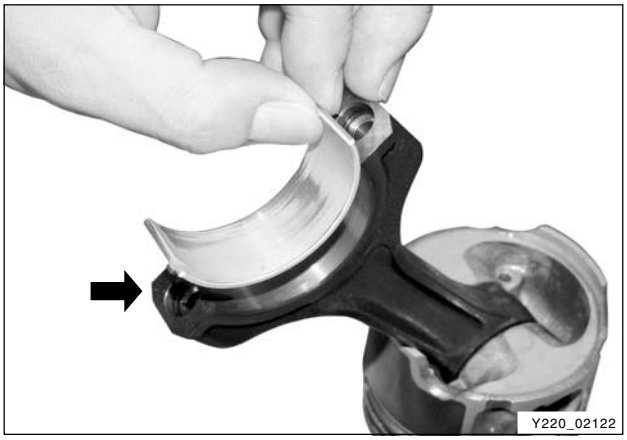

4. Fit the piston onto connecting rod so that the marking on piston crown and locking slot are facing to straight ahead direction.

Notice

Install the piston so that the piston recess (marking) or the stamped surface of connecting rod is facing to straight ahead direction.

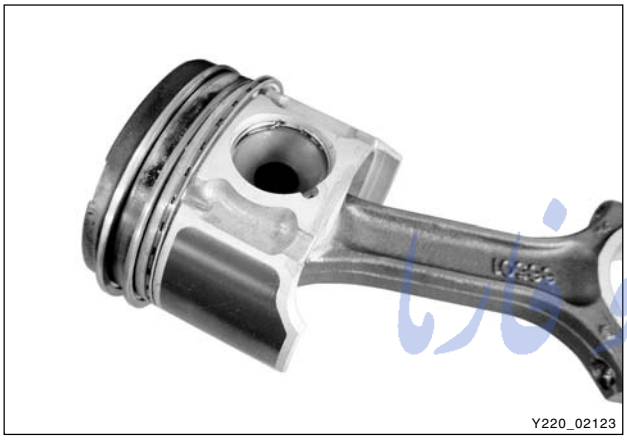

5. Lubricate piston pin and push in by hand.

Notice

Do not heat up the piston.

6. Place new snap rings into the grooves.

Notice

The snap rings should be replaced with new one.

7. Lubricate the cylinder bore, connecting rod bearing journals, connecting rod bearing shells and pistons.

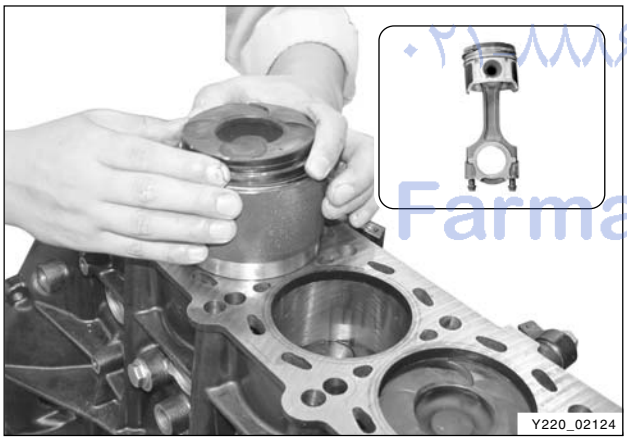

8. Push piston into the cylinder with a wooden stick.

Notice

The marking on the piston crown must be facing to straight ahead direction.

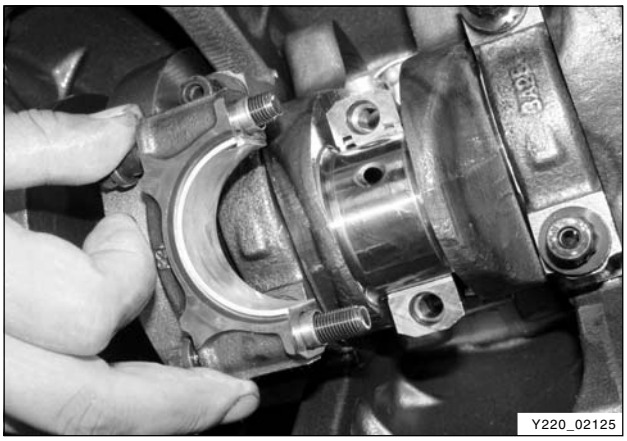

9. Insert connecting rod bearing shells.

Notice

- ***The upper and lower connecting rod bearings have same appearance. Therefore, make sure to check the part number before replacing them.***
- ***Install bearing rod bearing cap so that so that the retaining lugs are on the same side of the connecting rod bearing.***

امداد خودرو فارما
تلفن شبانه روزی: ۰۲۱۸۸۸۶۲۰۸۵
FarmaSOS.com

10. Measure stretch shaft diameter of the connecting rod bolts.

Limit “C”	7.1 mm

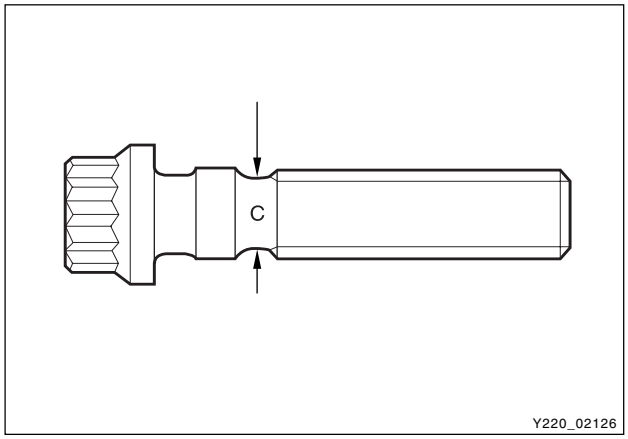

11. Lubricate the new connecting rod bolts and tighten.

Tightening torque	40 ± 5.0 Nm, 90° + 10°

- End play of connecting rod cap

Specified value	0.5 ~ 1.5 mm

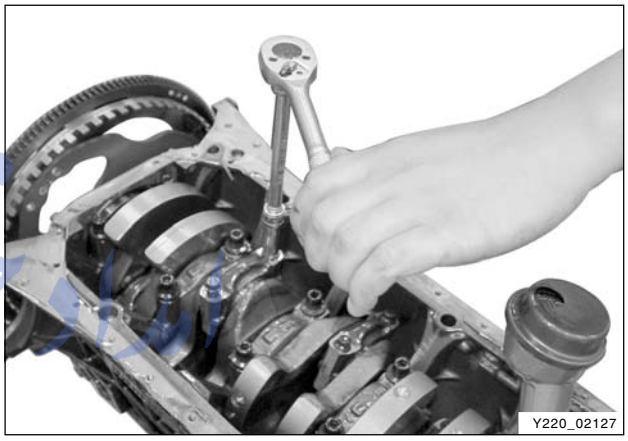

12. Position piston to TDC and measure the distance between piston and parting surface of crankcase.

Permissible piston protrusion	0.765 ~ 1.055 mm

- Measure at both ends of axial direction.

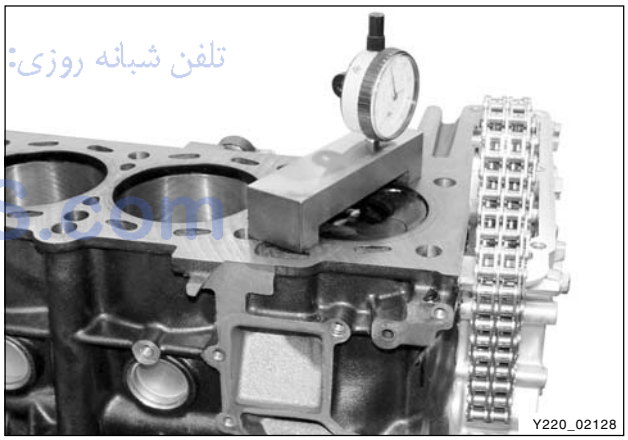

FarmaSOS.com

▶ Special Tools and Equipment

Name and Part Number	Application
Piston protrusion measuring jig  Y220_02129	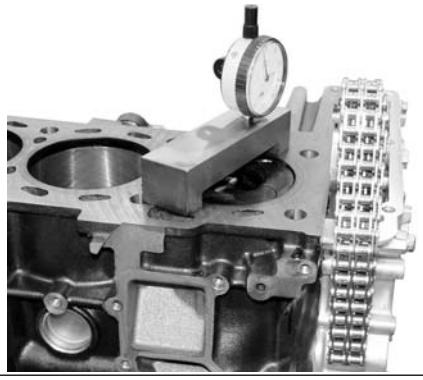 Y220_02130
Piston insertion jig  Y220_02131	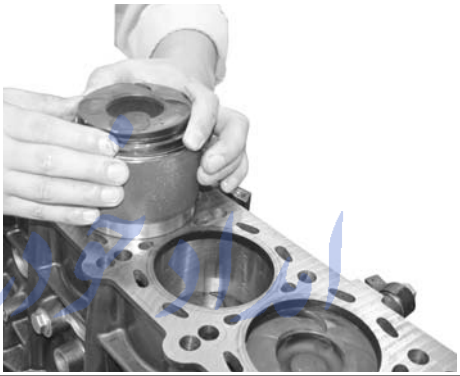 Y220_02132

ایران خودرو فارما
تلفن شبانه روزی: ۰۲۱-۸۸۸۶۲۰۸۵
FarmaSOS.com

HIGH PRESSURE PUMP (HPP)

COMPONENTS LOCATOR

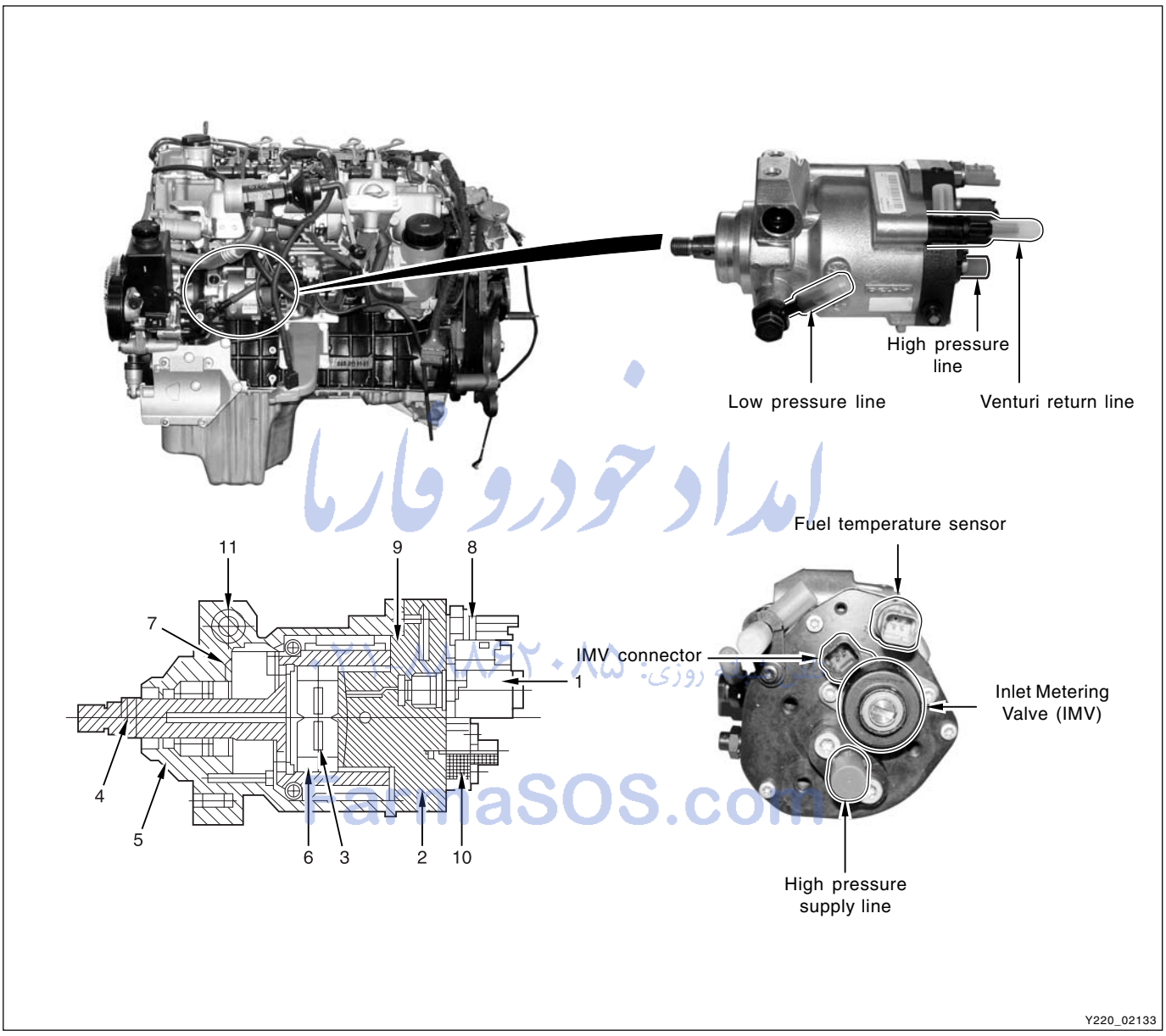

1. Inlet Metering Valve (IMV)
2. Hydraulic pressure head
3. Plunger
4. Drive shaft and cam ring
5. Housing
6. Roller and shoe
7. Low pressure pump
8. Fuel temperature sensor
9. Venting
10. High fuel pressure supply line
11. Pressure regulator

CHANGED BY	
EFFECTIVE DATE	
AFFECTED VIN	

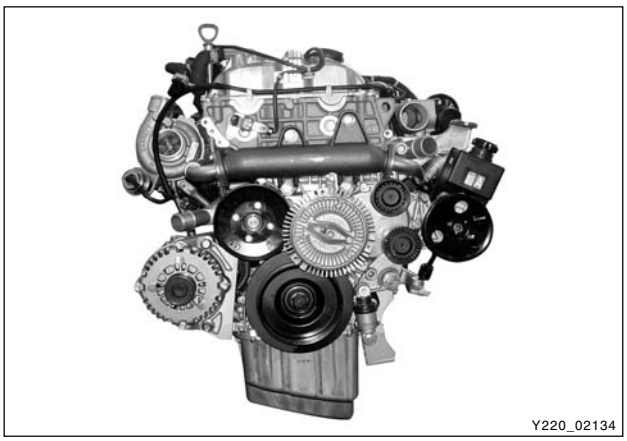
Y220_02134

HP Pump - Disassembly and Reassembly

※ Preceding works:

- Removal of fan belt (including cooling fan and fan clutch) and fan shroud
- Removal of intake manifold assembly
- Removal of water pump pulley
- Removal of auto tensioner
- Removal of EGR pipe
- Removal of oil dipstic gauge

Notice

- ***To prevent oil leaks, store the removed auto tensioner in upright position.***
- ***Be careful not to damage the rubber bellows.***
- ***Plug the oil ports for HP pump with sealing caps.***

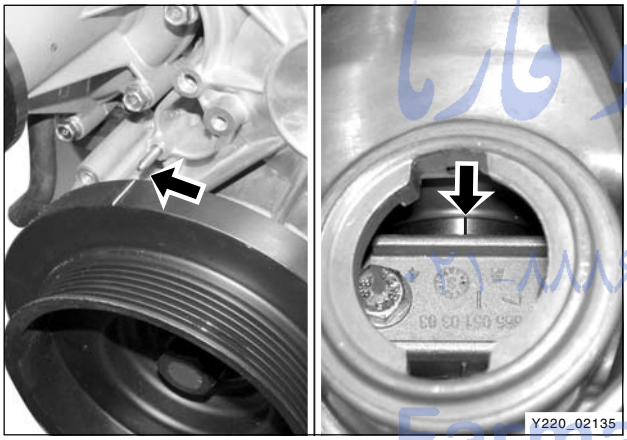
Y220_02135

1. Set crankshaft pulley to OT point. Open the oil filler cap and check if the cam shaft notch marking is aligned to OT point.

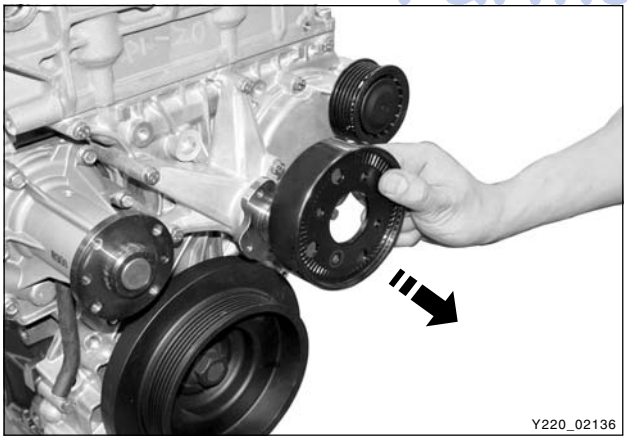
Y220_02136

2. Remove the cooling fan idle pulley with a pulley holder (special tool).

امداد خودرو فارما
تلفن شبانه روزی: ۰۲۱-۸۸۸۶۲۰۸۵
FarmaSOS.com

3. Remove the cooling fan bracket assembly.

Notice

Be careful not to get the sealant or foreign materials into the engine.

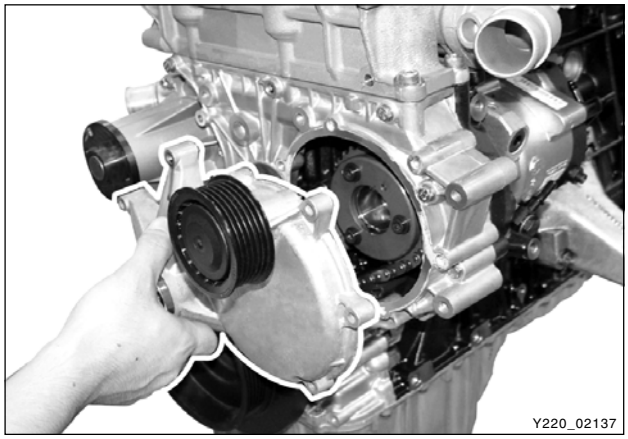

4. Place the marks on the chain and HP pump sprocket for installation.

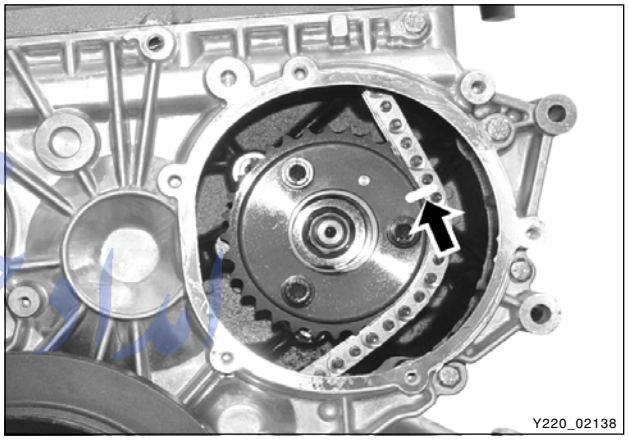

5. Remove the vacuum modulator bracket.
6. Remvoe the fuel pipes and wiring connectors which connected to fuel pump.

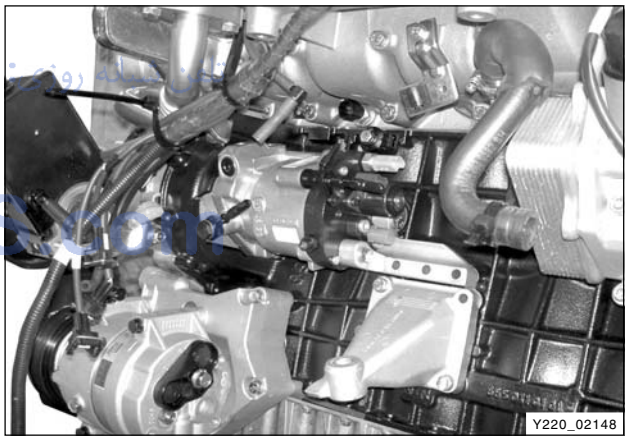

7. Turn the crankshaft pulley to the counter clockwise direction to ATDC 45° then remove the chain tensioner.

Installation Notice

Tightening torque	80 ± 8Nm

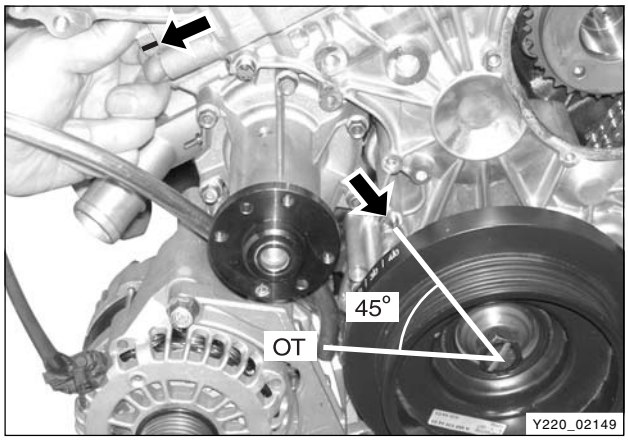

FarmaSOS.com

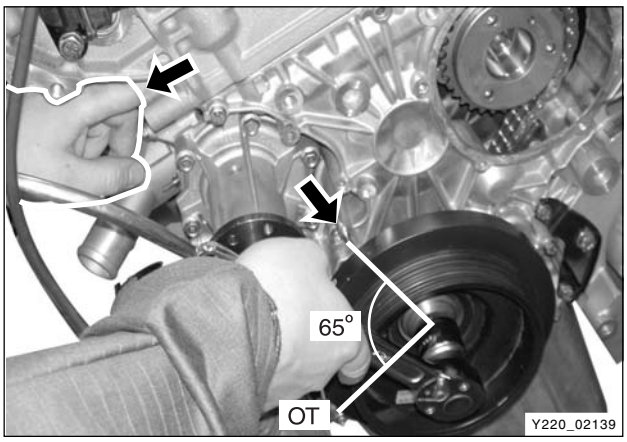

8. While insert finger and push the chain guide backward direction and turn the crankshaft pulley to ATDC 65° by counter clockwise direction until feel the chain guide inclined backward.

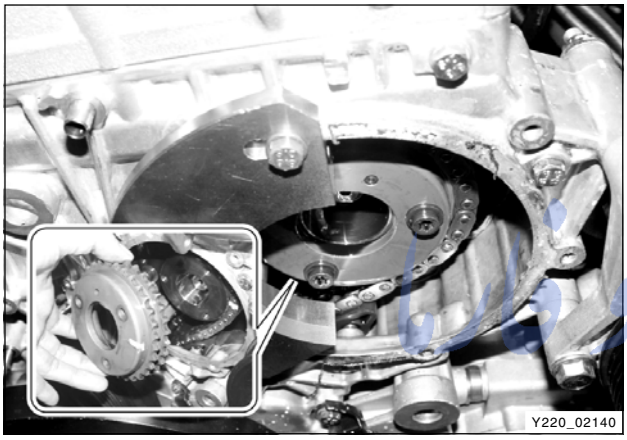

9. Install a special tool into the cooling fan bracket hole to hold the sprocket.

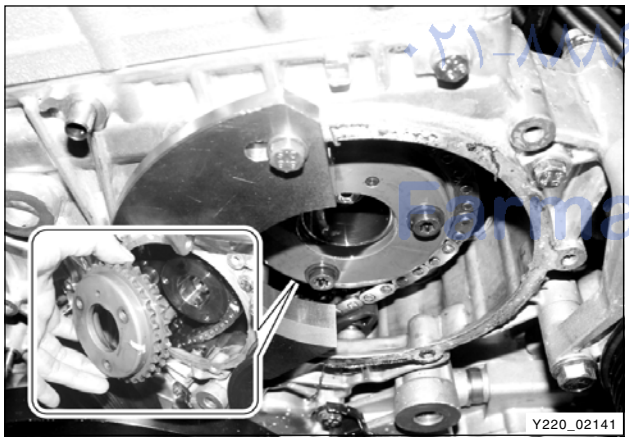

10. Remove the sprocket bolts and center nut and after slightly lifted up the chain, remove the pump sprocket.

Installation Notice

Tightening torque	Nm
Sprocket bolt	20 Nm + 90°
Center nut	65 ± 5 Nm



11. Remove the HP pump bearing with HP pump bearing puller (special tool).

Notice

Do not apply excessive force. The timing chain may deviates.

امداد خودرو فارسی
FarmaSOS.com

12. Remove the HP pump mounting bracket.

Installation Notice

Tightening torque	24 ± 2.4 Nm

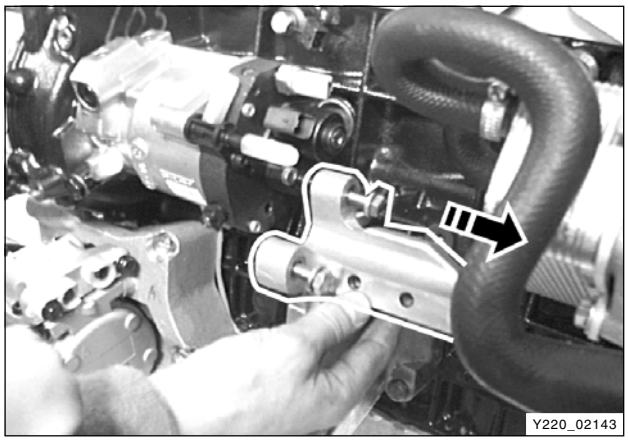

13. Unscrew the external bolts and remove the HP pump while rocking and tapping it with a rubber hammer.

Notice

- ***To prevent HP pump shaft damaging, do not apply excessive impact.***
- ***Do not apply excessive force. The timing chain may deviates.***

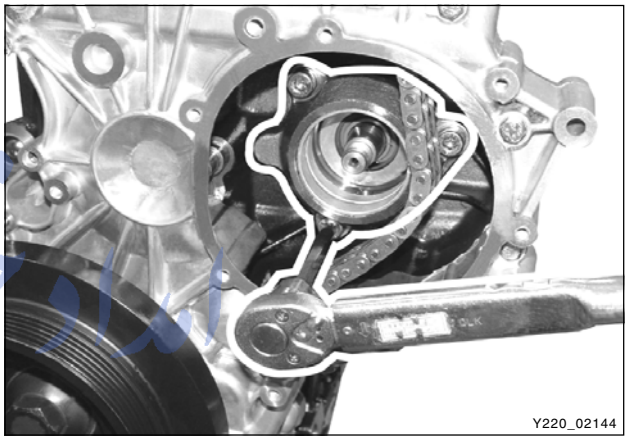

14. Remove the HP pump.

15. Install the new HP pump with sealing caps.

Notice

Remove the sealing caps only when connecting the pipes and hoses.

16. When replaced the HP pump, initialize the fuel pressure by using SCAN-100. Refer to “Trouble Diagnosis” section in this manual.

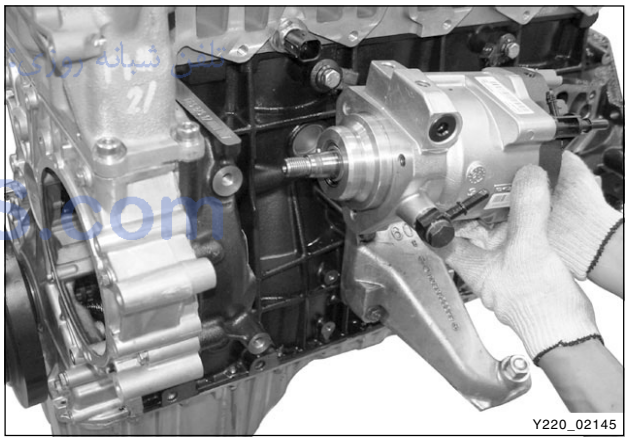

FarmaSOS.com

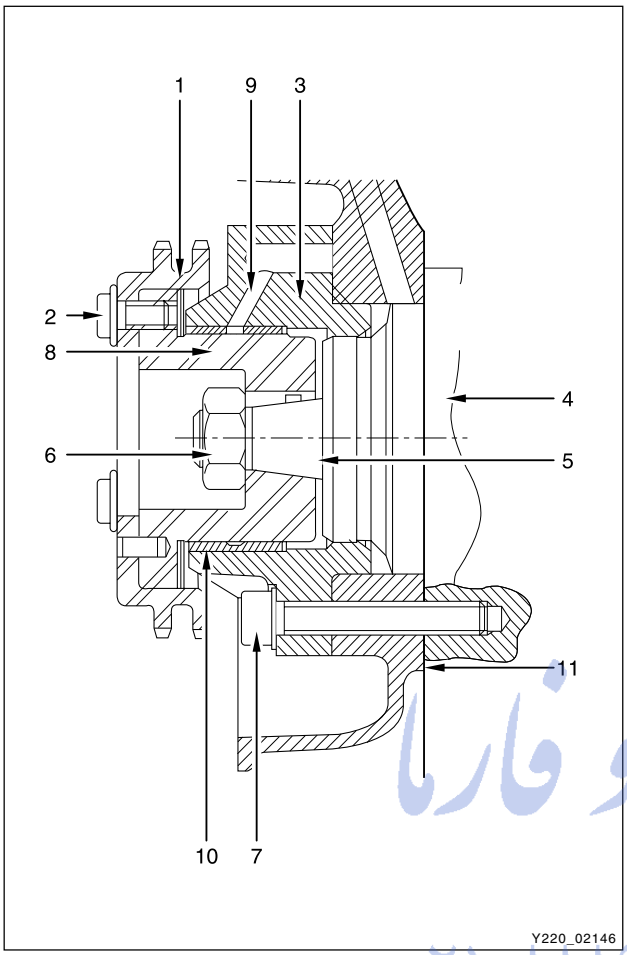

Notice

If the initialization of fuel pressure has not been performed, the engine ECU controls new HP pump with the stored offset value. This may cause the poor engine output.

Install in the reverse order of removal and tighten the fasteners with the specified tightening torque.

1. HP pump sprocket
2. 12-sided sprocket mounting bolt
3. HP pump bearing housing
4. HP pump (High Pressure Pump)
5. HP pump shaft
6. HP pump center nut
7. HP pump outer bolt
8. HP pump bearing shaft
9. Oil gallery
10. Bearing bushing
11. Gasket

* Tightening torque

Center nut (M14 x 1.5 - 1EA)	65 ± 5.0 Nm
Outer bolt (M8 x 55 - 3EA)	24 ± 2.4 Nm
Sprocket bolt (M7 x 13 - 3EA)	20 Nm ± 90°

امداد خودرو فارما
تلفن شبانه روزی: ۰۲۱-۸۸۸۶۲۰۸۵
FarmaSOS.com

SECTION DI03

INTAKE SYSTEM

امداد خودرو فارما

تلفن شبانه روزی: ۰۲۱-۸۸۸۶۲۰۸۵

FarmaSOS.com

SECTION DI03

INTAKE SYSTEM

Table of Contents

AIR FLOWS DI03-3

INTAKE SYSTEM LAYOUT DI03-4

Components locator DI03-4
Air cleaner DI03-5
Air flow sensor
(hot film air mass sensor) DI03-8
Intercooler DI03-14
Intake manifold assembly DI03-16

SPECIAL TOOLS AND EQUIPMENT DI03-17

امداد خودرو فارما
۰۲۱-۸۸۸۶۲۰۰۰
FarmaSOS.com

CHANGED BY	
EFFECTIVE DATE	
AFFECTED VIN	

امداد خودرو فارما

تلفن شبانه روزی: ۸۸۸۶۲۰۸۵-۰۲۱

FarmaSOS.com

AIR FLOWS

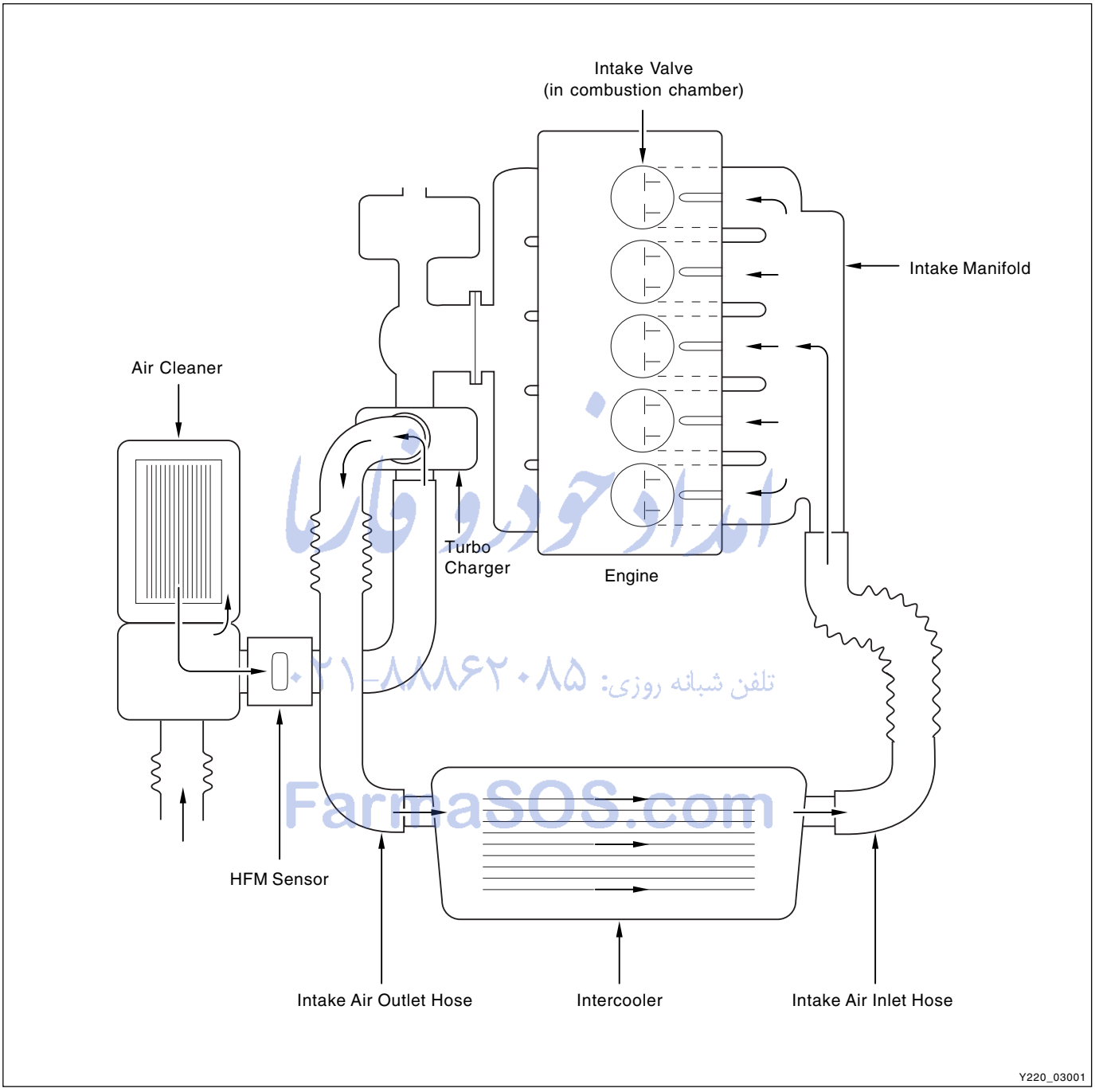

امداد خودرو فارا
تلفن شبانه روزی: ۰۲۱-۸۸۸۶۲۰۸۵
FaraSOS.com

▶ Work Flow of Intake System

Air Cleaner → HFM Sensor → Turbo Charger → Intercooler → Intake Manifold → Combustion Chamber in Engine

CHANGED BY	
EFFECTIVE DATE	
AFFECTED VIN	

INTAKE SYSTEM LAYOUT

COMPONENTS LOCATOR

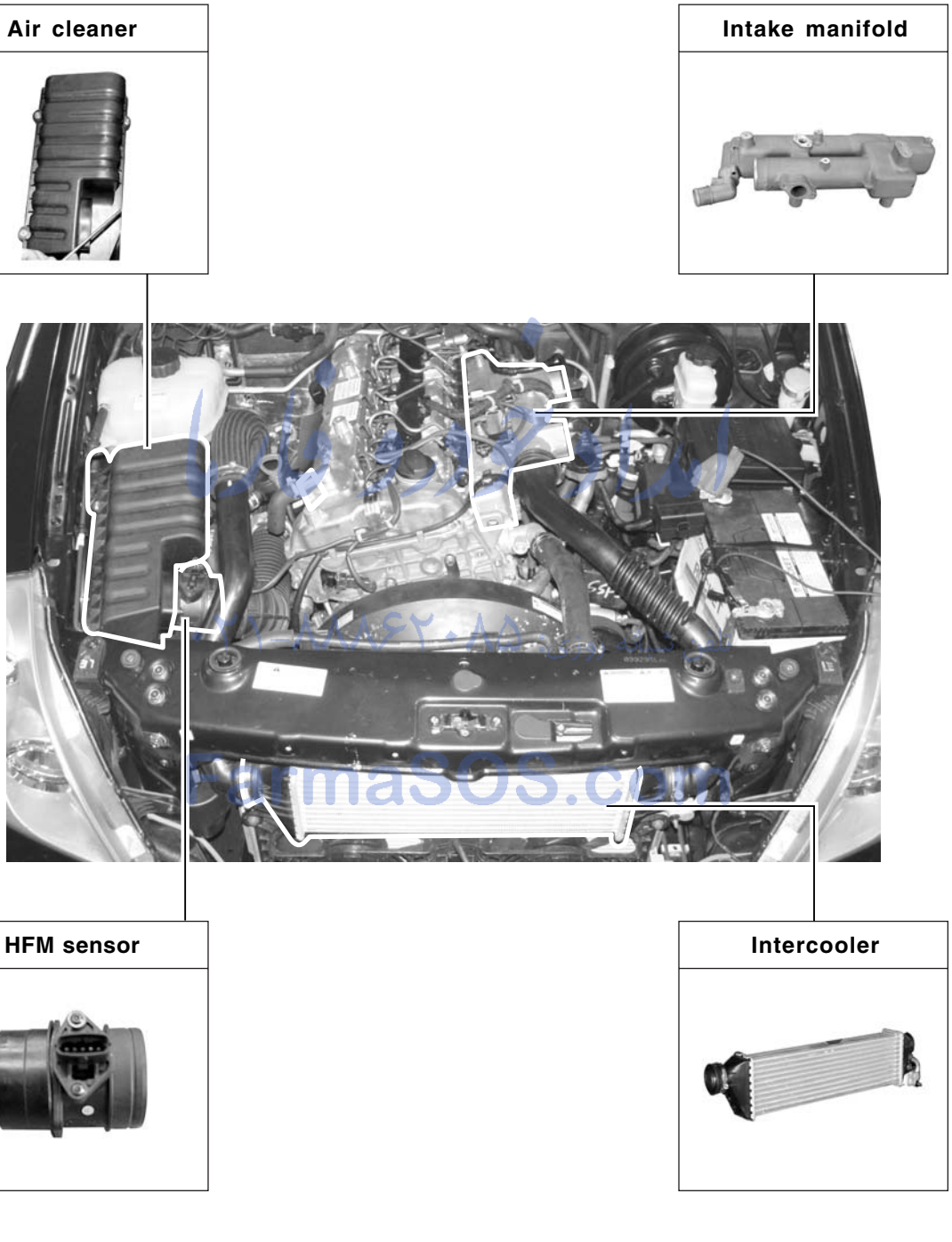

FarmaSOS.com

AIR CLEANER



ایساکودرو فارما
تلفن شبانه روزی: ۰۲۱-۸۸۸۶۲۰۸۵
FarmaSOS.com

▶ Specifications

Element Type	Dry-Element Type
Service Interval	* Initial cleaning: 5,000 km, Clean or change every 10,000 km as required. However, change every 30,000 km. * If the vehicle is operated under severe condition (short distance driving, extensive idling or driving in dusty condition): More frequent maintenance is required.

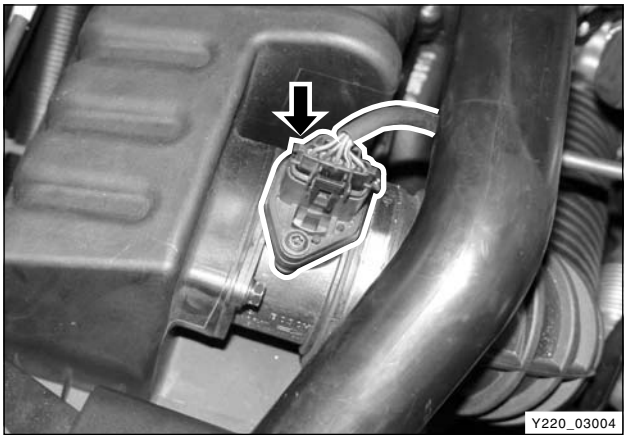

Air Cleaner Element - Replacement

※ Preceding Work: Disconnection of negative battery cable

1. Disconnect the HFM sensor connector.
2. Loosen the locking clamp and remove the intake duct.

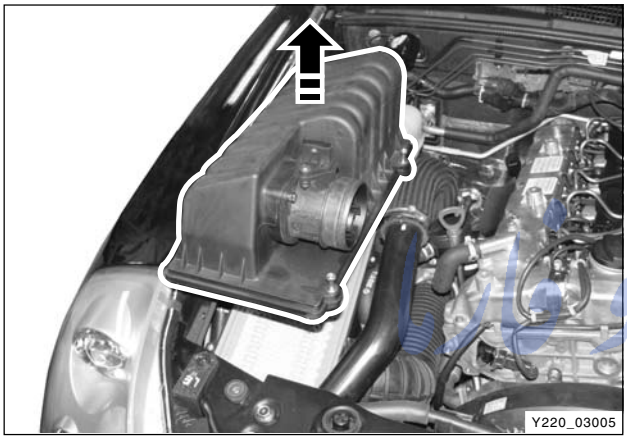

3. Unscrew the screws and remove the air cleaner cover.

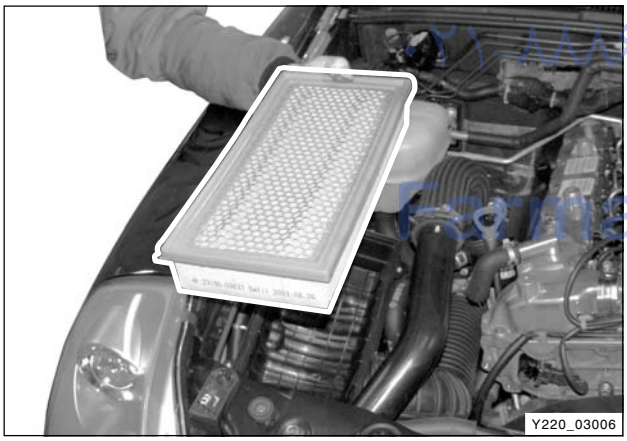

4. Remove the air cleaner element. Clean or replace the element as required.

امداد خودرو سایپا
تلفن شبانه روزی: ۰۲۱-۸۷۶۲۰۸۵
FarmaSOS.com

Air Cleaner Housing - Removal and Installation

※ Preceding Work: Removal of air cleaner cover

1. Set aside the return hose and remove the coolant reservoir bolts.

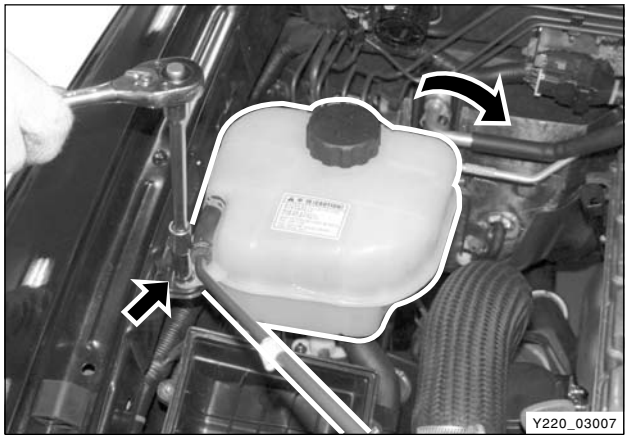
Y220_03007

2. Remove the air cleaner housing bolts.
3. Install in the reverse order of removal.

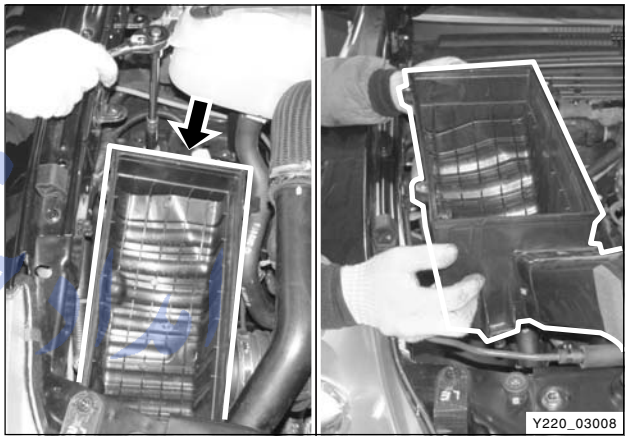
Y220_03008

FarmaSOS.com

Air Cleaner Housing/Element - Check

1. Check the air cleaner body, cover and packing for deformation, corrosion and damage.
2. Check the air duct for damage.

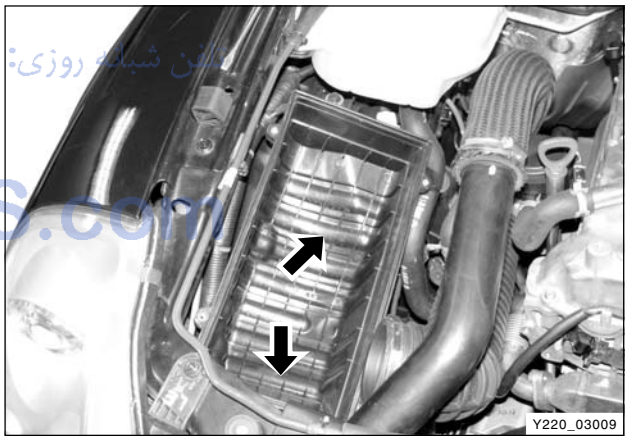
Y220_03009

3. Check the air cleaner element for clogging, contamination and damage. If the element is partially clogged, remove the dust or foreign materials with the compressed air. If the contamination is severe, replace it with new one. Also, be careful not to contaminate during the replacement.
4. Check the air cleaner housing for clogging, contamination and damage.
5. If the inside of housing is contaminated, remove the contaminants.

Notice

When cleaning the air cleaner with compressed air, direct the air from inside (engine) to outside (ambient air). Otherwise, contaminants can get into the engine.

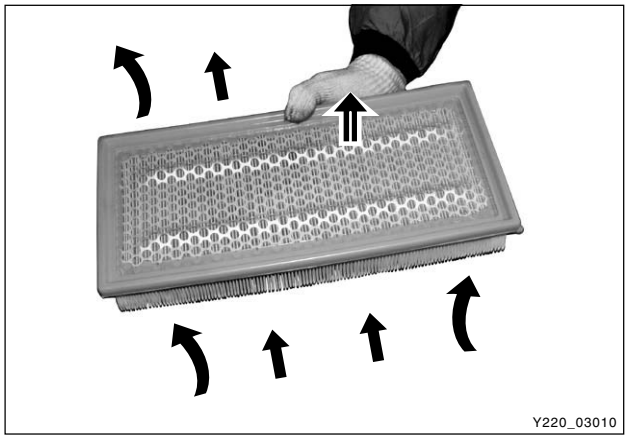
Y220_03010

CHANGED BY	
EFFECTIVE DATE	
AFFECTED VIN	

AIR FLOW SENSOR (HOT FILM AIR MASS SENSOR)

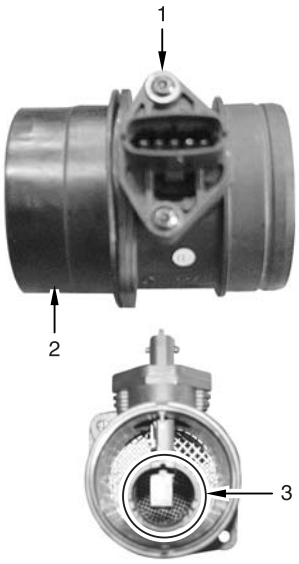

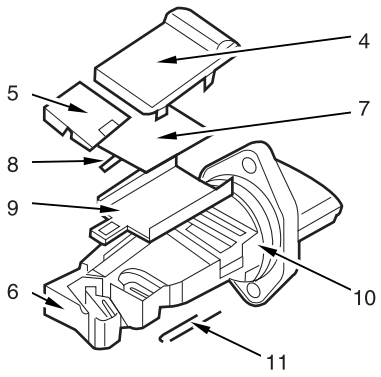

<Cl type HFM sensor structure>

▶ **Change history**

inner tube added + grid (No.3) added + sensing chip changed + sensing section design changed

▶ **Results**

Durability has enhanced 60 times (lab test results)

Y220_03011

1. Plug-in sensor
2. Cylinder housing
3. Protection grid
4. Hybrid cover
5. Measuring duct cover
6. Housing
7. Hybrid
8. Sensor
9. Mounting plate
10. O-ring
11. Temperature sensor

امداد خودرو فارما
تلفن شبانه روزی: ۰۲۱-۸۸۸۶۲۰۸۵
FarmaSOS.com

Air flow sensor is locating on the air intake passage between air cleaner and intake manifold and measures air volume flows to engine combustion chamber and intake air temperature.

And intake temperature sensor built-in the sensor detects intake temperature.

Internal circuit of the air flow sensor is being used to control the voltage value to control the temperature to maintain the heating resistance (Rh) to 160°C that is higher temperature than intake air temperature that is measured by resistance (Rl).

Temperature sensor of the heating resistance (Rh) is measured by resistance (Rs).

If temperature changes occur due to increasing/decreasing intake air volume, voltage of the heating resistance changes to maintain the intake air temperature changes to set value (160°C).

Control unit computes intake air volume based on voltage changes of heating resistance.

Intake air temperature is measured by NTC integrated in the sensor.

Intake air temperature sensor is a part of HFM sensor and a thermister and resister and detects air temperature changes that flow into the engine. There occurs high resistance when temperature is low and low resistance when high (NTC type).

ECU supplies 5 V to intake air temperature sensor and then measures voltage changes to determine the intake air temperature. When air in the intake manifold is cold, the voltage is high and air is hot, the voltage is low.

The reason for using HFM sensor is that this sensor is most proper in controlling accurate air-fuel ratio to meet the legal emission regulations. This sensor measures actual intake air mass into engine very accurately during specific instant acceleration and deceleration, and determines engine loads and detects intake air pulsation and air flows.

Main functions of HFM sensor are:

- Using for EGR feedback control
- Using for turbocharger booster pressure control valve control
- Using for fuel injecting compensation

CI type HFM sensor: The air flowing the sensor does not directs toward sensing section but flows along with lower wall after passing protection grid to enhance durability of the sensor. Oil, water and dust less damage the sensor.

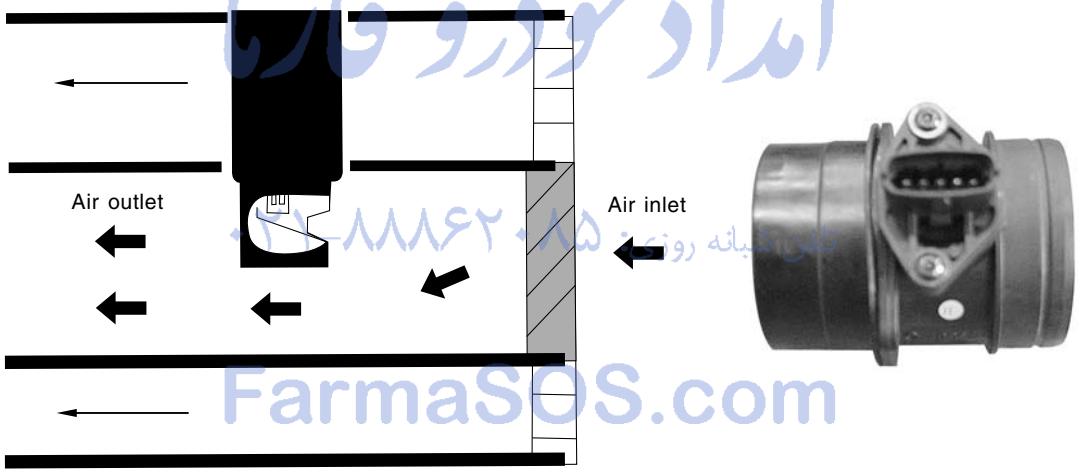

امداد خودرو فارما
FarmaSOS.com

<Structure of CI type HFM sensor>

Y220_03012

CHANGED BY	
EFFECTIVE DATE	
AFFECTED VIN	

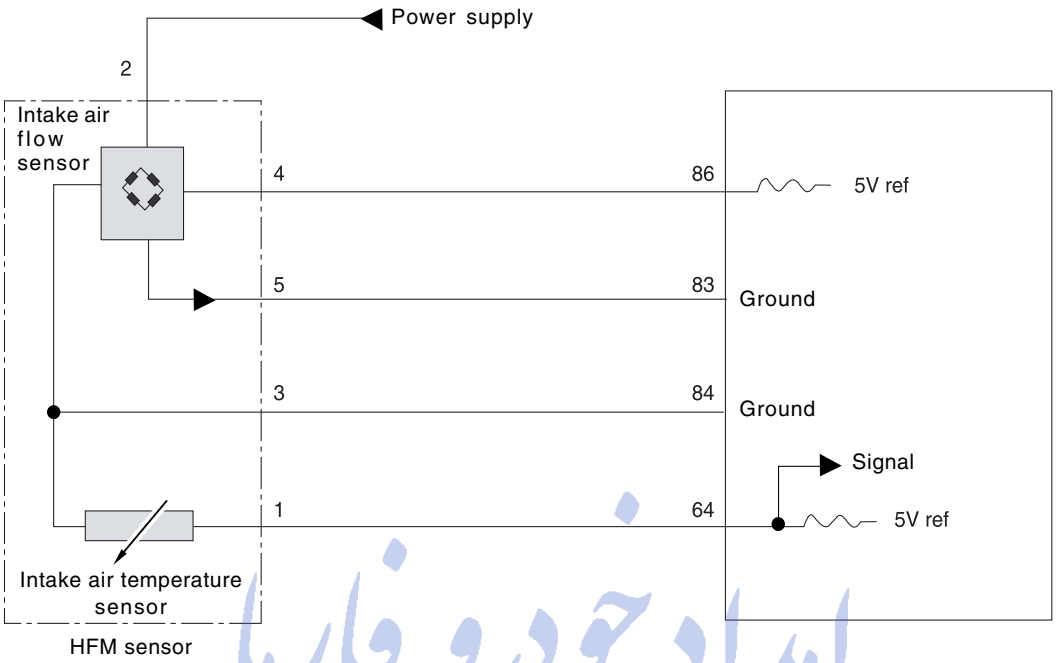

<Circuit diagram of HFM sensor>

Y220_03013

امداد خودرو فارما
تلفن شبانه روزی: ۰۲۱-۸۸۸۶۲۰۸۵
FarmaSOS.com

HFM Sensor - Removal and Installation

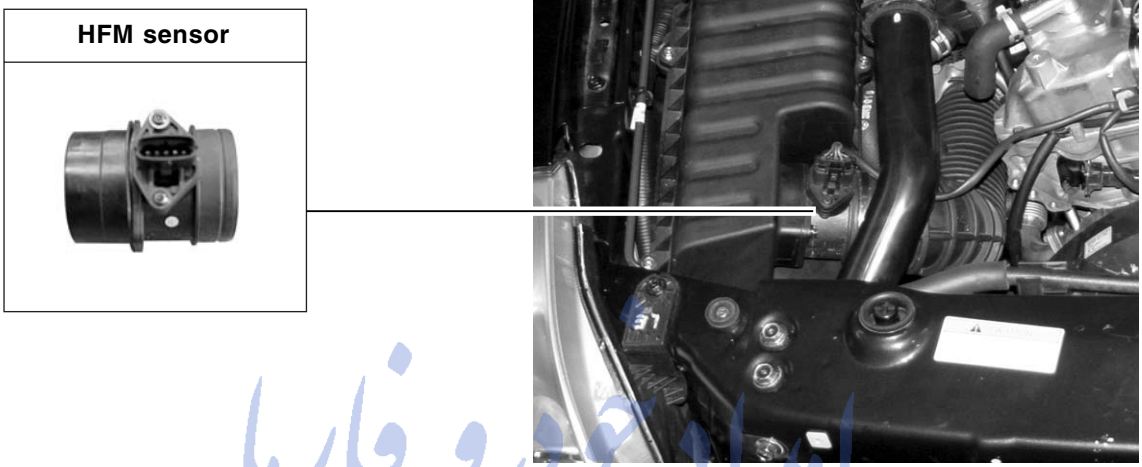

Y220_03014

※ Preceding Work: Disconnection of negative battery cable

1. Disconnect the negative battery cable.
2. Loosen the clamps on the air cleaner and the turbo charger and remove the duct.

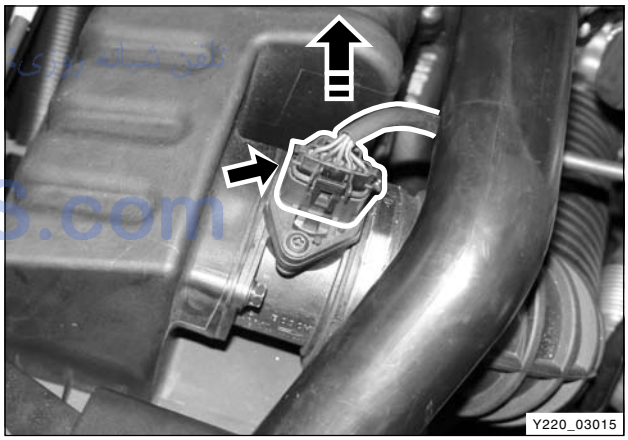

Y220_03015

3. Unscrew the bolts and remove the HFM sensor assembly.

Tightening torque	10 ± 1.0 Nm

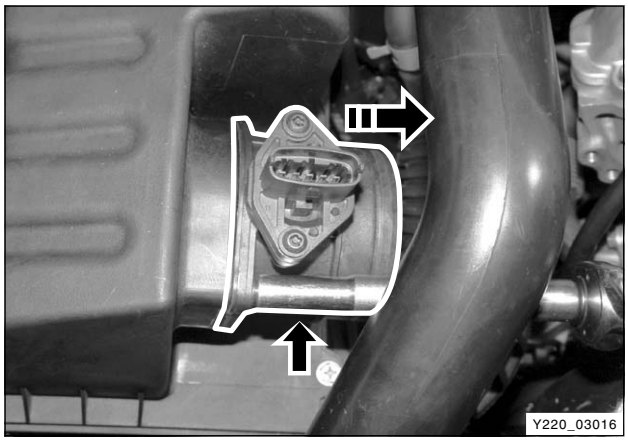

Y220_03016

امداد خودرو فارما
۰۲۱-۸۸۸۶۲۰۸۵ تلفن شبانه روزی
FarmaSOS.com

CHANGED BY	
EFFECTIVE DATE	
AFFECTED VIN	



4. Install in the reverse order of removal.

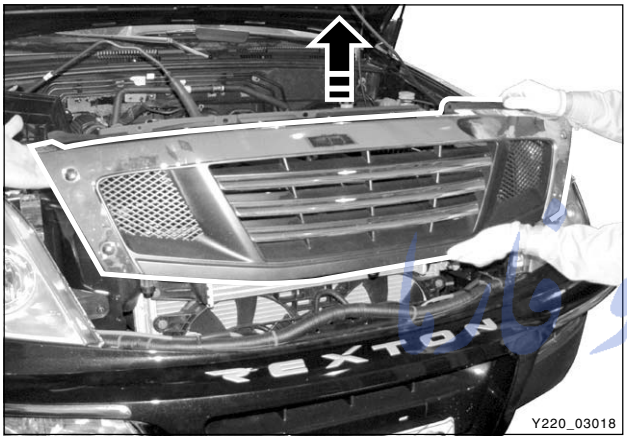

Intake Air Outlet Hose (Turbo Charger) - Removal and Installation

1. Remove the radiator grille.

امداد خودرو ما
تلفن شبانه روزی: ۰۲۱-۸۸۸۶۲۰۸۵
FarmaSOS.com

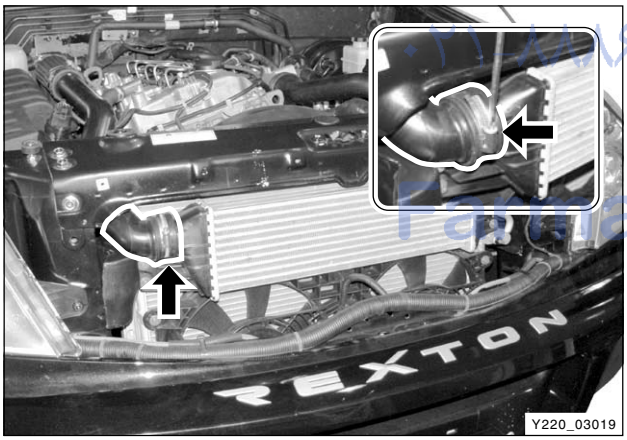

2. Loosen the clamp at both sides and remove the outlet hose.

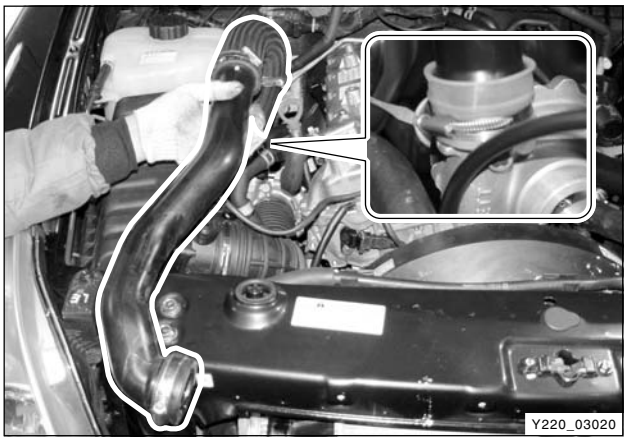

3. Loosen the clamp on the intake air hose and remove the intake air hose.

Installation Notice

Tightening torque	6 ~ 7 Nm

4. Install in the reverse order of removal.

Notice

Securely fasten the clamps on the pipes and hoses.

Intake Air Inlet Duct (Air Cleaner) - Removal and Installation

1. Loosen the clamp at intercooler side.
2. Loosen the clamp at turbo charger side.

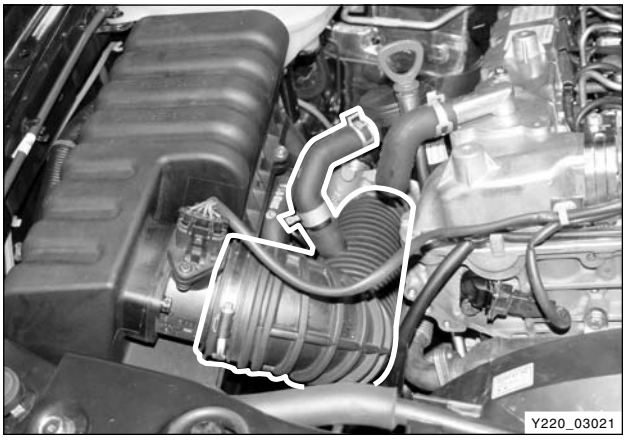

3. Separate the hose from the oil separator and remove the intake duct.
4. Install in the reverse order of removal.



امداد خودرو فارما
FarmaSOS.com

Intake Air Inlet Duct (Intake Manifold) - Removal and Installation

1. Loosen the clamp on the inlet hose in intercooler.

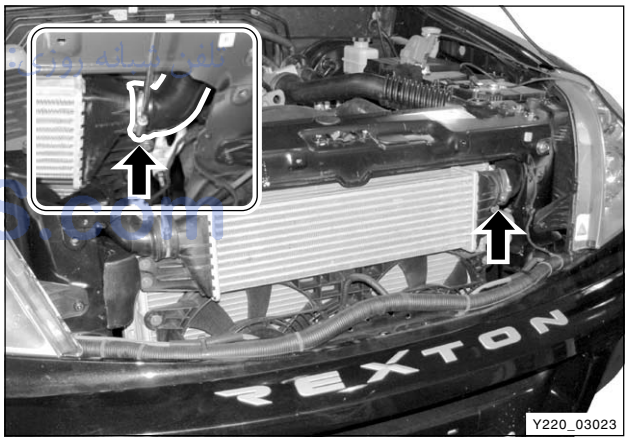

2. Loosen the clamp at the intake manifold and remove the inlet hose.

Installation Notice

Tightening torque	6 ~ 7 Nm

3. Install in the reverse order of removal.

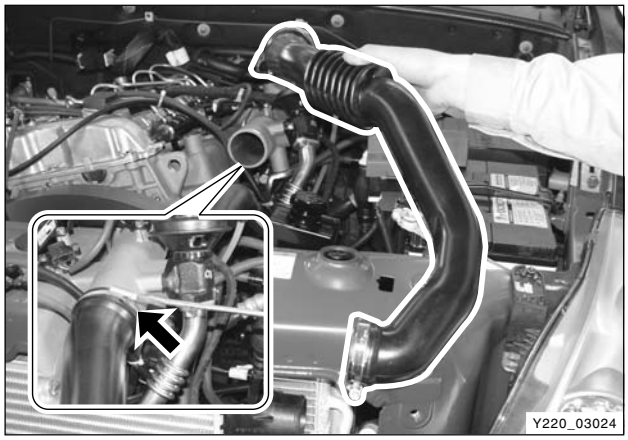

CHANGED BY	
EFFECTIVE DATE	
AFFECTED VIN	

INTERCOOLER

The turbo charger is designed to improve the engine power by introducing more air (oxygen) into the engine. However, the intake air is heated (100 ~ 110°C) during the compression process in turbo charger compressor and the density is lowered.

The intercooler is the device which cools (50 ~ 60°C) the air entering the engine. Colder air has more oxygen molecules than warm air. Thus cooler air gives more power and better fuel economy.



1. Intercooler

تلفن شبانه روزی: ۰۲۱-۸۸۸۶۲۰۸۵
FarmaSOS.com

Intercooler - Removal and Installation

1. Remove the radiator grille.

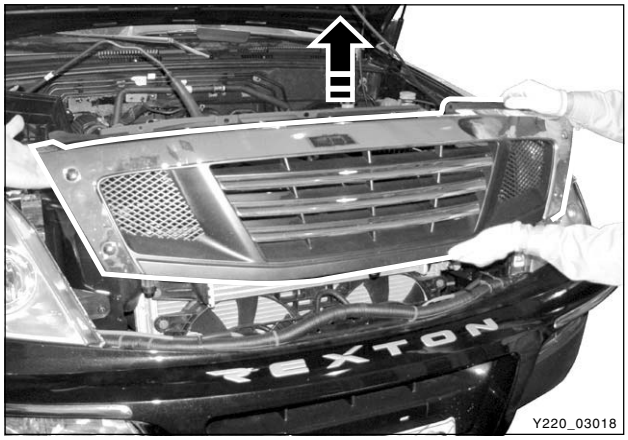

2. Loosen the clamp at both sides (inlet and outlet) of the intercooler.

Installation Notice

Tightening torque	6 ~ 7 Nm

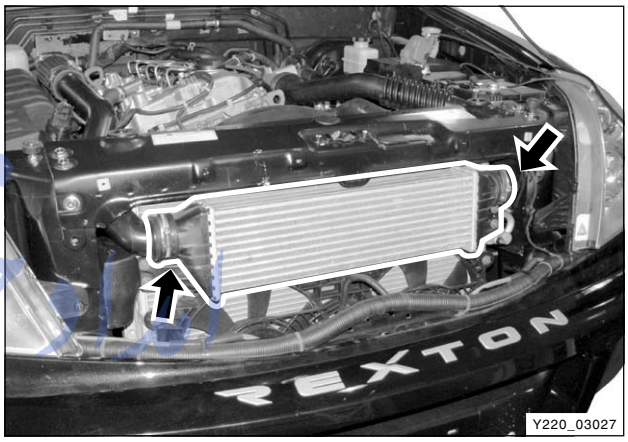

3. Remove the intercooler mounting bolts.

Installation Notice

Tightening torque	10 ± 1.0 Nm

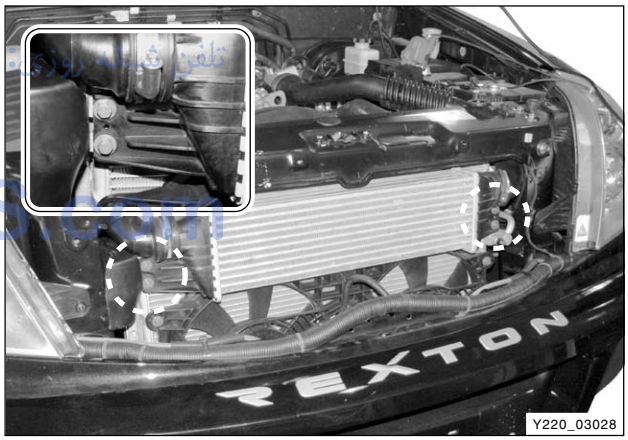

4. Remove the air duct in intake manifold and the intercooler assembly.

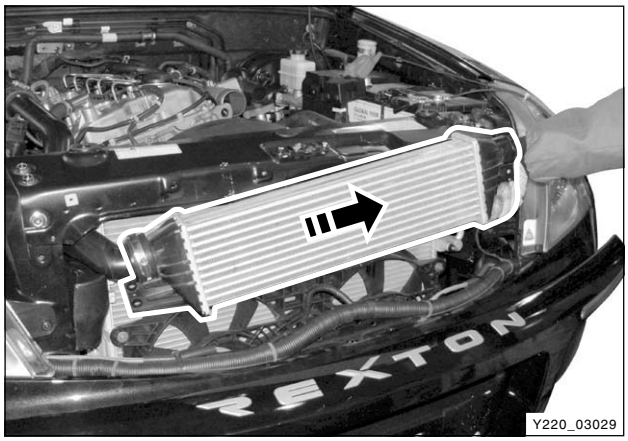

5. Install in the reverse order of removal.

FarmaSOS.com

INTAKE MANIFOLD ASSEMBLY

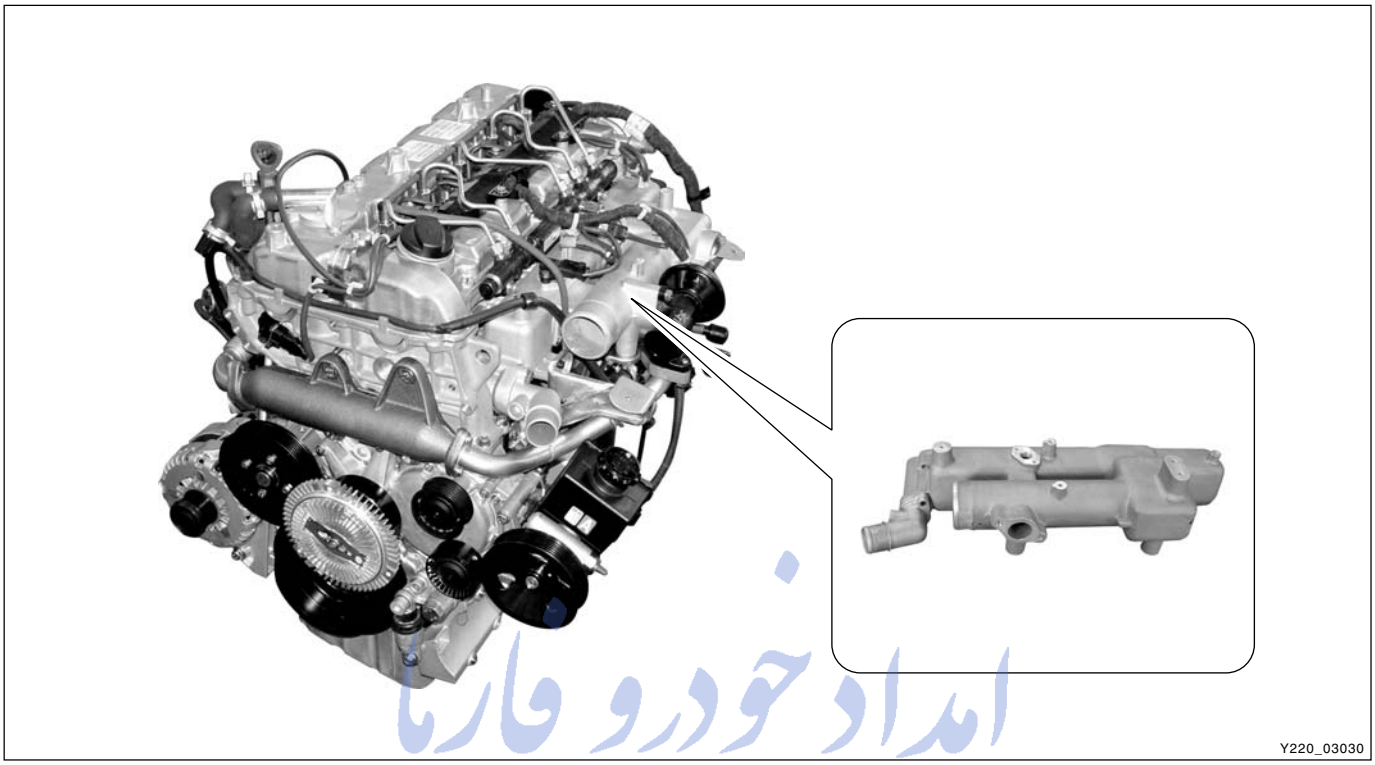

▶ System Characteristics

- Shape that delivers the required capacity of compressed air from turbo charger to inlet port
- Optimized EGR gas mixture in inlet chamber
- Maximized intake efficiency with helical and tangential inlet port
  - Improving the swirl ratio in low and mid operating range
  - Improving the acceleration/fuel economy and reducing the maintenance in low and mid operating range
- Integrated inlet port and coolant outlet port

امداد خودرو فارما
تلفن شبانه روزی: ۰۲۱-۸۸۸۶۲۰۸۵
FarmaSOS.com

SPECIAL TOOLS AND EQUIPMENT

Name and Part Number	Application
Intake manifold locking guide pin  Y220_03031	Installation of intake manifold 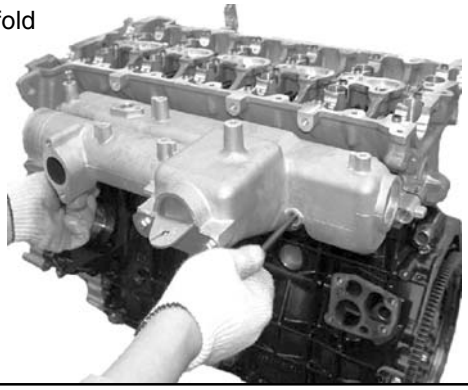 Y220_03032

امداد خودرو فارما
تلفن شبانه روزی: ۰۲۱-۸۸۸۶۲۰۸۵
FarmaSOS.com

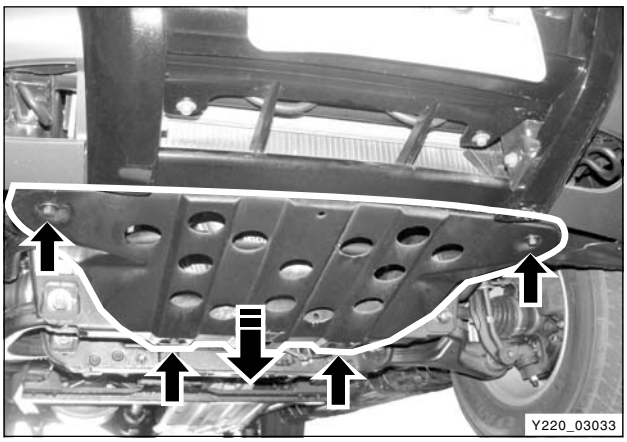

Intake Manifold - Removal/Installation

※ Preceding Work: Disconnection of negative battery cable

1. Lift up the vehicle and remove the skid plate.

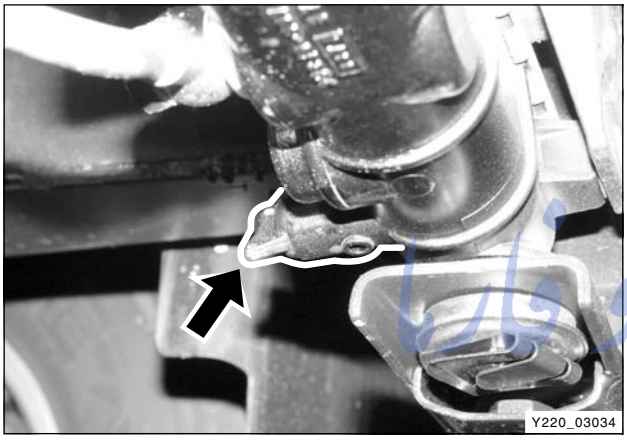

2. Open the coolant reservoir cap and remove loosen the drain cock to drain the coolant.

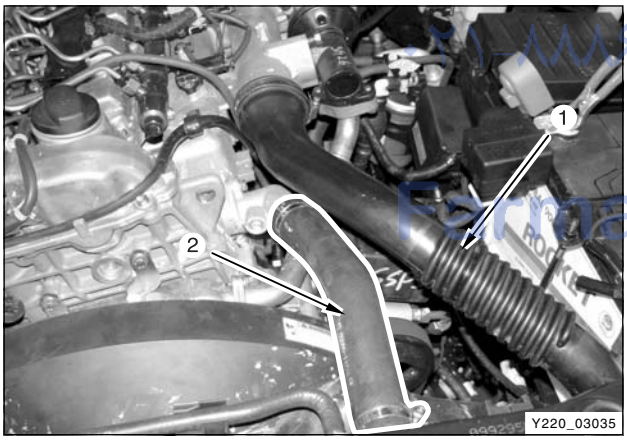

3. Remove the air inlet hose (1) from intake manifold.
4. Loosen the clamp and remove the coolant inlet hose (2).

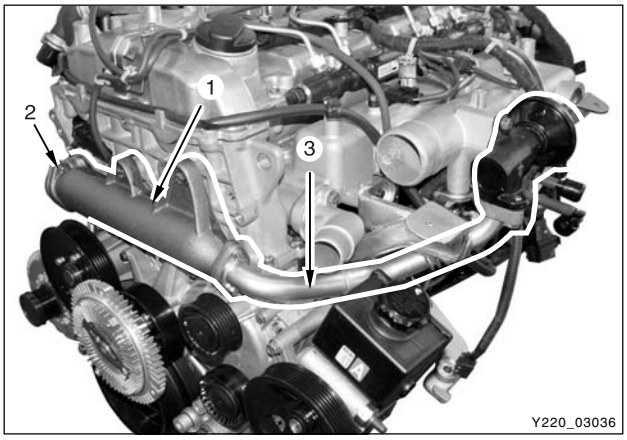

5. Remove the coolant inlet port housing.
6. Remove the vacuum hose from EGR valve.
7. Remove the EGR valve mounting bolts and gasket. Remove the EGR exhaust pipe (primary) mounting bolts and gasket.

Notice

- ***Replace the pipes (2, 3) at both sides of EGR cooler (1) and gaskets with new ones.***
- ***Make sure that the convex surface of gasket is facing to the pressurized direction.***

امداد خودرو فارس
FarmaSOS.com

8. Remove the brackets and connectors from top section of the engine.
   - Vacuum hose bracket in turbo charger
   - Booster pressure sensor
   - Main wiring bracket
   - Ground cable bracket
   - Fuel pressure sensor connector
9. Unscrew the bolts and remove the vacuum modulator bracket.

Tightening torque	9.0 Nm

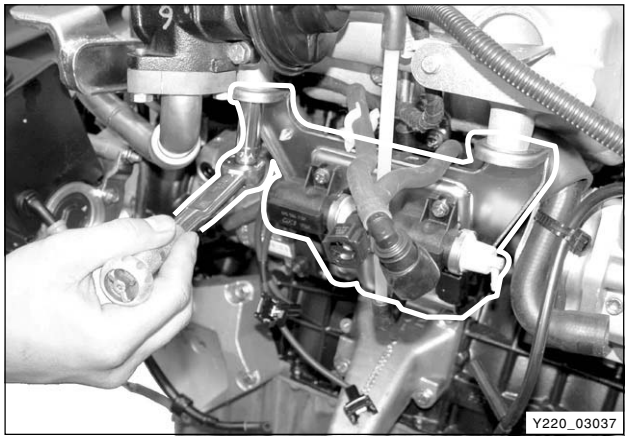

10. Remove the HP pump fuel supply line bolts.
11. Remove the HP pump fuel supply line mounting bracket.
12. Remove the HP pump fuel return line at fuel filter.

Notice

- ***Plug the openings of pipes and ports with sealing caps to keep the cleanness of the fuel system.***
- ***Replace the pipes with new one once removed.***

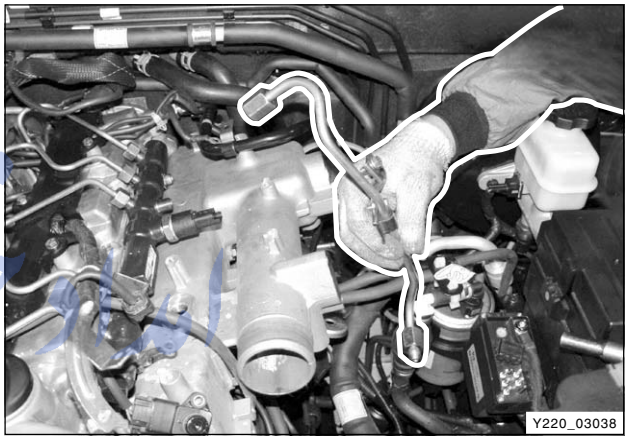

13. Remove the injector return line at HP pump.

Notice

- ***Be careful not to damage the pipes to HP pump.***
- ***Plug the fuel return port of the HP pump with a sealing cap.***

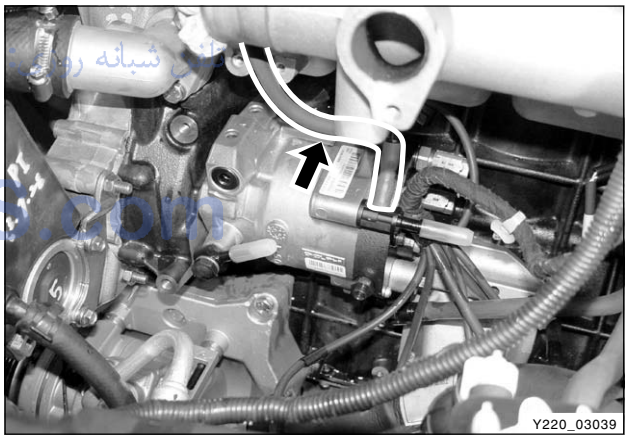

FarmaSOS.com

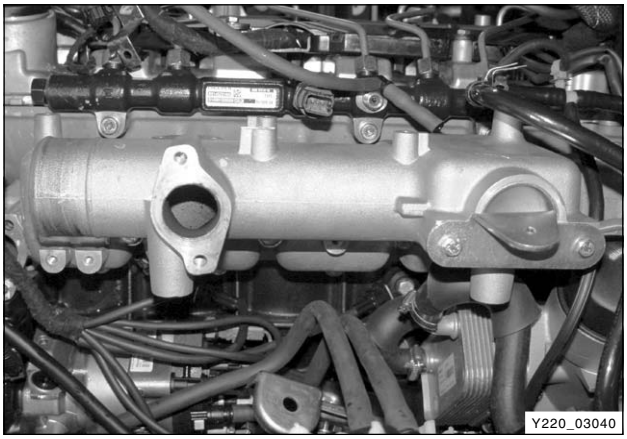
Y220_03040

14. Remove the intake manifold mounting bolts.

Notice

1. ***Check the length of the bolts before installation.***
   M8 x 45: 6EA
   M8 x 130: 6EA

Tightening torque	25 ± 2.5 Nm

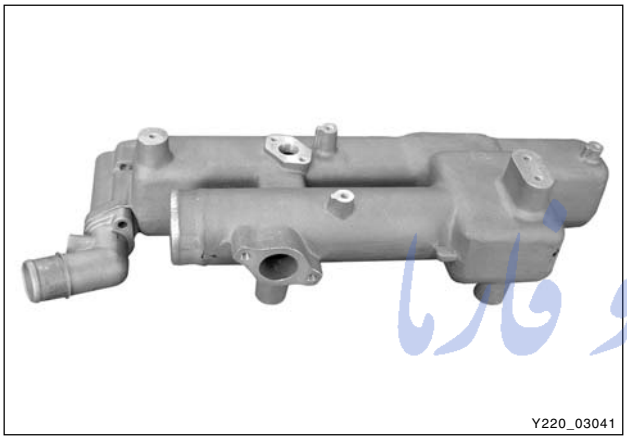
Y220_03041

15. Lift up the vehicle and remove the propeller shaft joint bolts.
16. Unscrew the bolt in oil filter and remove the intake manifold and gasket.

Notice

- ***Replace the gasket with new one.***
- ***Make sure that the residual coolant in intake manifold gets into the inside of inlet port.***

17. Install in the reverse order of removal.

Notice

- ***Replace the gasket with new one.***
- ***If replaced only gasket without any other service operation, completely remove the coolant and other contaminants from the engine before installation.***

FarmaSOS.com

SECTION DI04

EXHAUST SYSTEM

امداد خودرو فارما

تلفن شبانه روزی: ۰۲۱-۸۸۸۶۲۰۸۵

FarmaSOS.com

SECTION DI04

EXHAUST SYSTEM

Table of Contents

EXHAUST SYSTEM LAYOUT DI04-3

Components locator DI04-3

Exhaust gas flows DI04-4

Turbo charger assembly DI04-6

EGR VALVE AND VACUUM MODULATOR DI04-27

EGR system DI04-27

EGR valve and turbo charger actuator control vacuum circuit DI04-28

EXHAUST SYSTEM AND MUFFLER DI04-36

Muffler DI04-36

System overview DI04-37

FarmaSOS.com

CHANGED BY	
EFFECTIVE DATE	
AFFECTED VIN	

امداد خودرو فارما

تلفن شبانه روزی: ۸۸۸۶۲۰۸۵-۰۲۱

FarmaSOS.com

EXHAUST SYSTEM LAYOUT

COMPONENTS LOCATOR

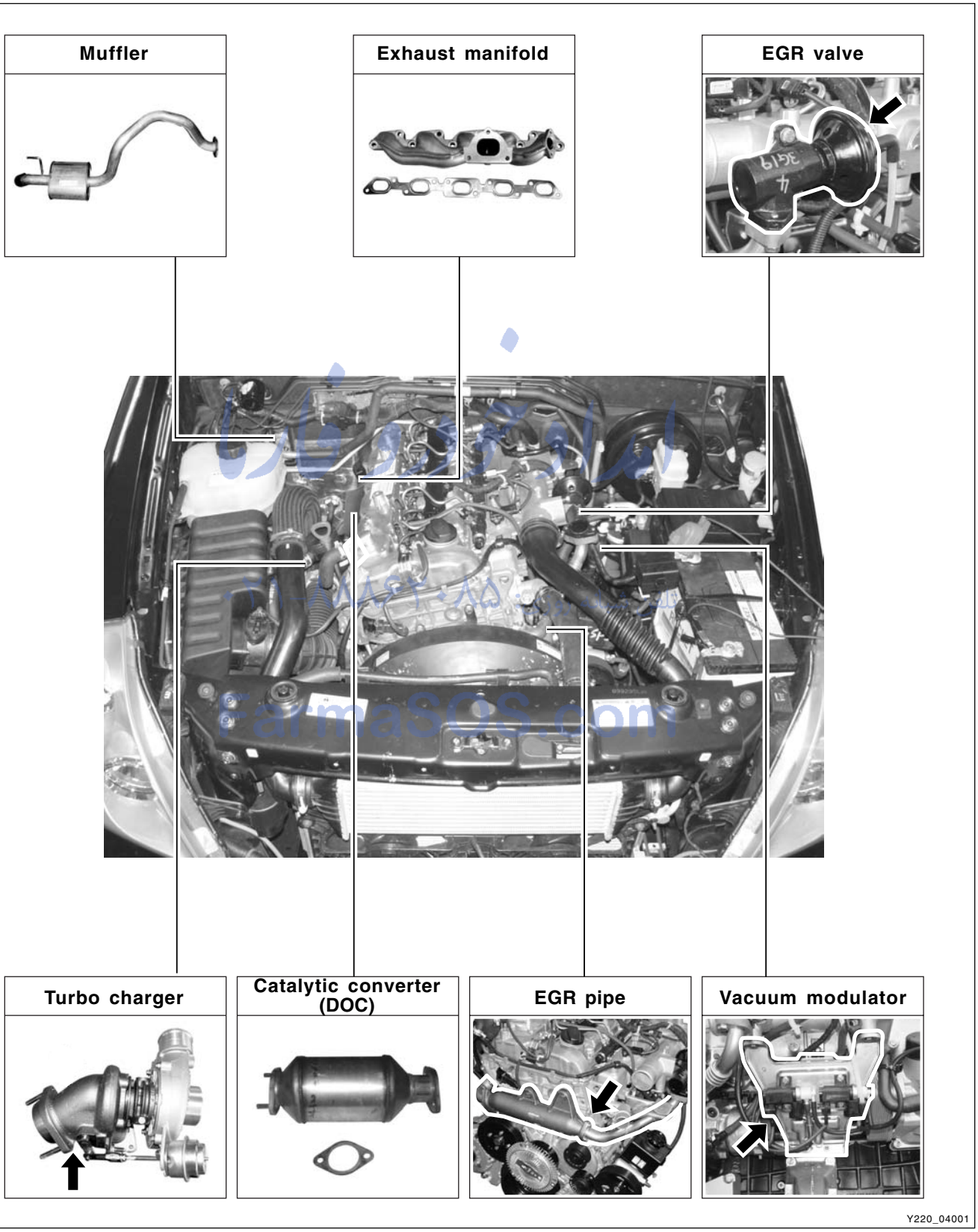

CHANGED BY	
EFFECTIVE DATE	
AFFECTED VIN	

EXHAUST GAS FLOWS

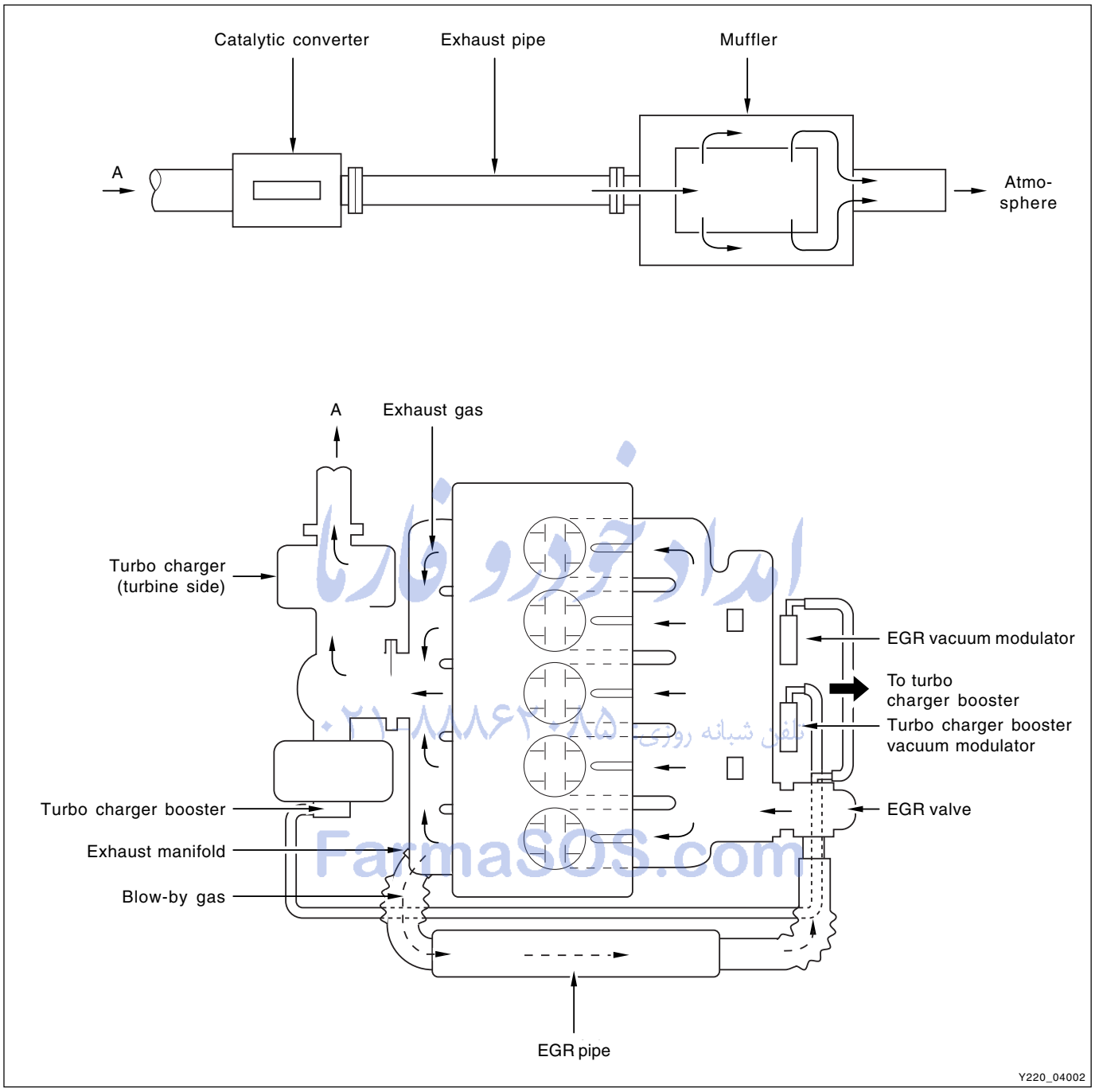

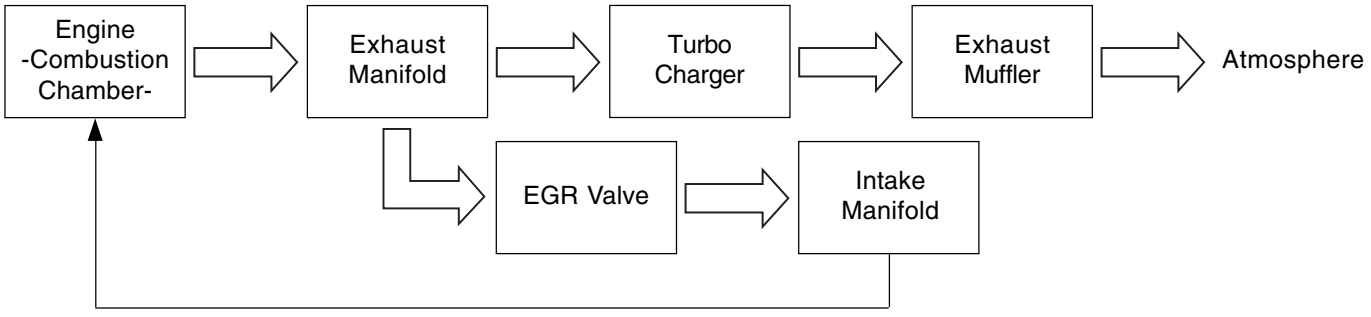

امداد خودرو فارما
تلفن شبانه روزی ۰۲۱-۸۸۸۶۲۰۸۵
FarmaSOS.com

Exhaust Manifold - Removal and Installation

1. Remove the two intake hoses from the turbo charger.

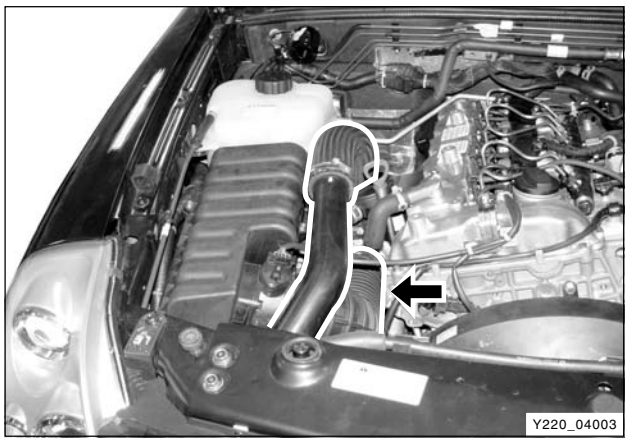

2. Remove the turbo charger assembly (refer to Turbo Charger section).

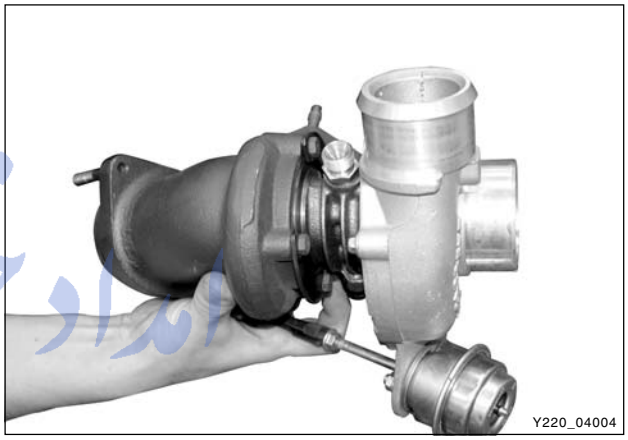

3. Remove the #3 pipe of EGR valve from the exhaust manifold.

Notice

The #3 pipe of EGR valve is exposed to the high temperature and pressure of exhaust gas. Replace the gasket and pipe with new ones. Otherwise, it may cause the leakage of exhaust gas.

Tightening torque	35 ± 3.5 Nm

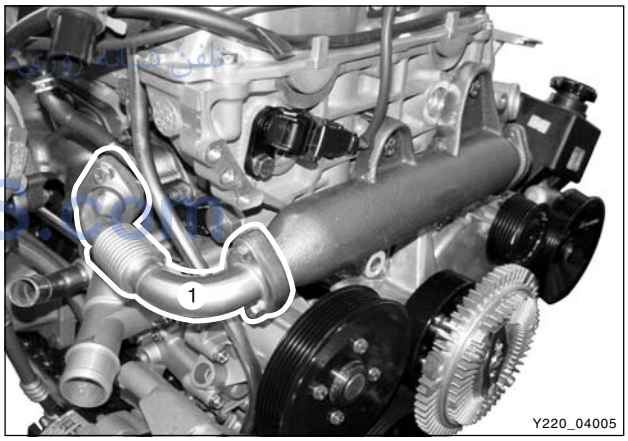

4. Unscrew the nuts and remove the exhaust manifold and gasket.

Tightening torque	40 ± 4.0 Nm

Notice

Replace the gasket with new one.

5. Install in the reverse order of removal.

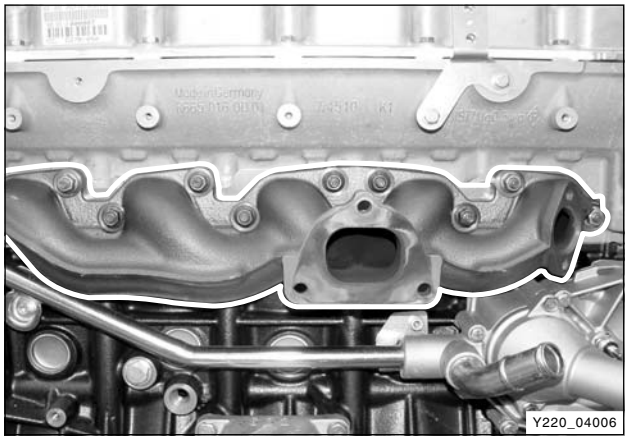

امداد خودرو فارما
۰۲۱-۸۸۸۶۲۰۸۵
FarmaCOS.com

CHANGED BY	
EFFECTIVE DATE	
AFFECTED VIN	

TURBO CHARGER ASSEMBLY

The turbo charger is an air pump installed on the intake manifold. It enhances power and increases torque power of engine to increase the fuel consumption rate. The engine without turbo charger cannot get as much power output as it inducts air by the means of vacuum being generated from descending strokes of the piston. Therefore, by installing the turbo charger on the intake manifold, it supplies great amounts of air to the cylinder increasing the volume efficiency and, subsequently, enhances output power.

Also, as the engine's power enhances, it increases the torque power and improves the fuel consumption rate. The regular turbo charger operates by utilizing the pressure from the exhaust gas and the other, called Super Charger, operates by utilizing power from the engine. When the turbo charger is installed, weight of the engine increases by 10 to 15 % whereas the output power increases by 35 to 45 %.

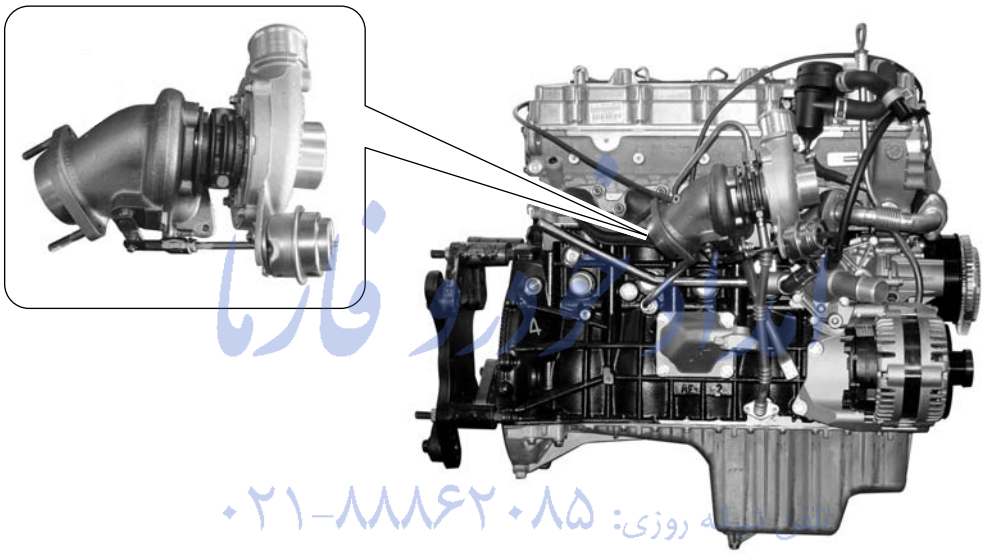

Y220_04007

FarmaSOS.com

▶ Operating Principle of Turbo Charger

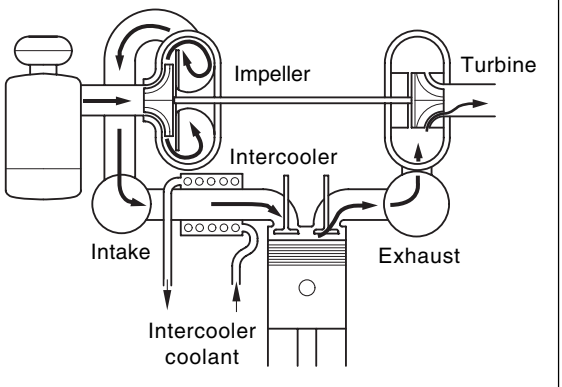

Y220_04008

The turbo charger has one shaft where at each ends are installed with two turbines having different angles to connect one end of housing to the intake manifold and the other end to the exhaust manifold. As the turbine, at exhaust end, is rotated by exhaust gas pressure the impeller, at intake end, gets rotated to send air around center of the impeller, being circumferentially accelerated by the centrifugal force, into the diffuser.

The air, which has been introduced to the diffuser having a passage with big surface, transforms its speed energy into the pressure energy while being supplied to the cylinder improving the volume efficiency. Also, the exhaust efficiency improves as the exhaust turbine rotates. The turbo charger is often referred to as the exhaust turbine turbo charger.

Diffuser: With the meaning of spreading out it is a device that transforms fluid's speed energy into the pressure energy by enlarging the fluid's passage to slow down the flow.

▶ Construction of Turbo Charger

The turbine wheel in turbo charger and compressor wheel are installed at each side of the shaft. It is comprised with the shaft supporting center housing (supporting the compressor with two float journal bearings), the turbine side parts of Turbine Wheel, Shroud and Turbine Housing, and the compressor side parts of compressor wheel, back plate and compressor housing.

- The turbine rotates turbine wheel by receiving exhaust gas energy from the engine.
- The compressor receives torque energy from the turbine and the compressor wheel inducts air to force it inside of the cylinder.

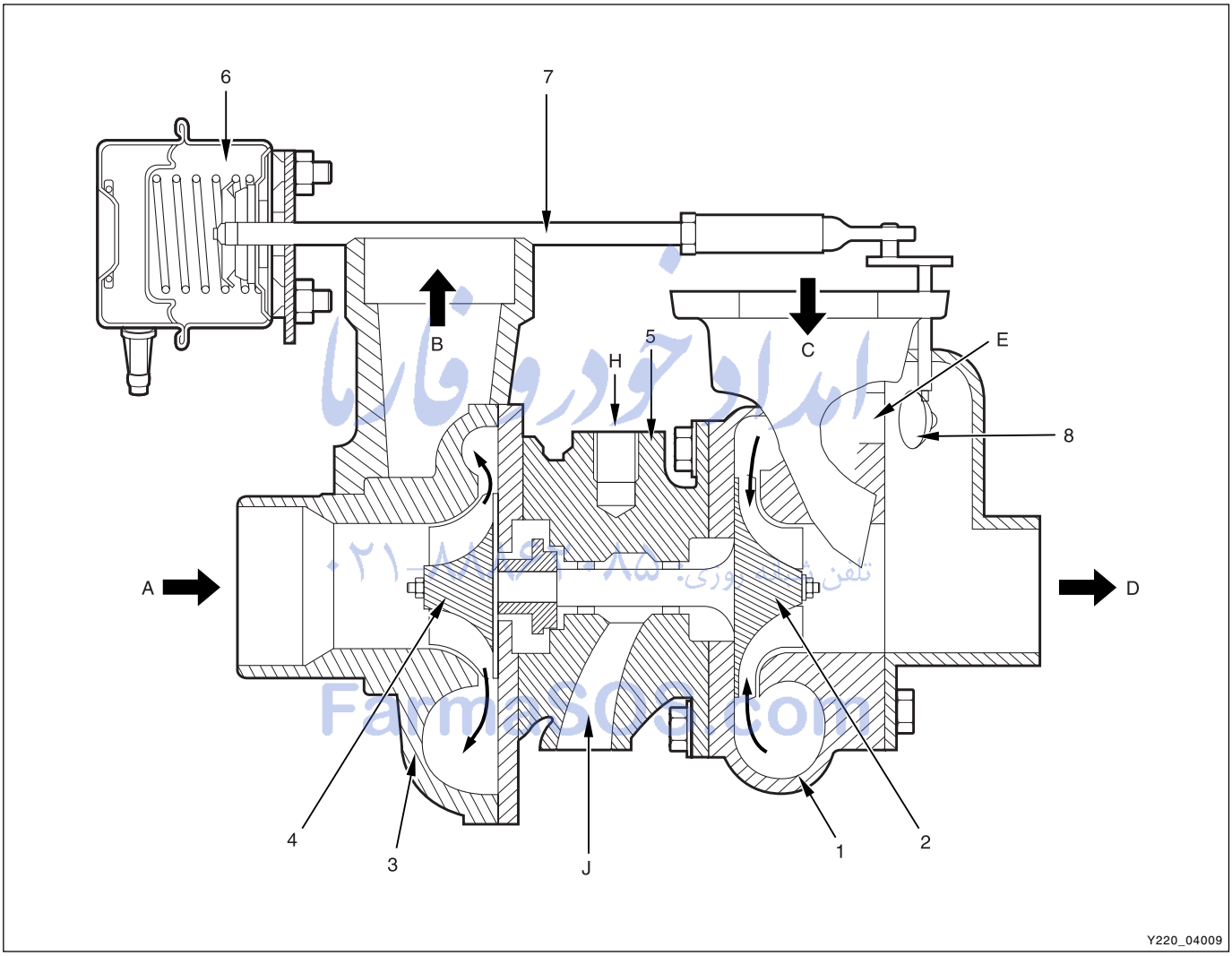

1. Turbine housing
2. Turbine wheel
3. Compressor housing
4. Compressor wheel
5. Center housing
6. Turbo charger booster pressure control valve
7. Control link
8. Bypass flap

A. Air inlet (from atmosphere)
B. Exhaust gas inlet (from cylinder)
D. Exhaust gas outlet (to atmosphere)
E. Exhaust gas bypass passage
H. Oil supply opening
J. Oil return line

CHANGED BY	
EFFECTIVE DATE	
AFFECTED VIN	

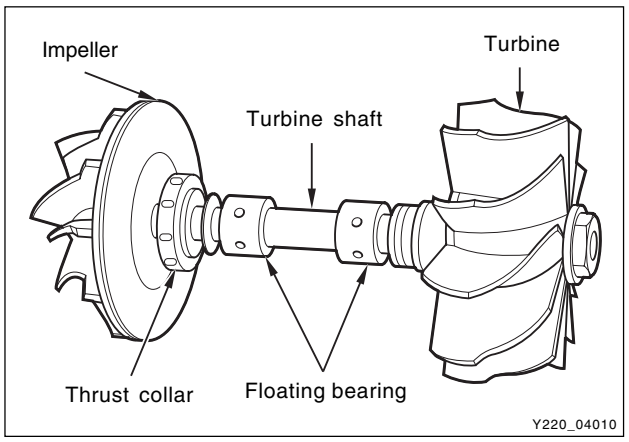

▶ Impeller

The impeller is wings (wheel) installed on the intake end and performs the role of pressurizing air into the cylinder.

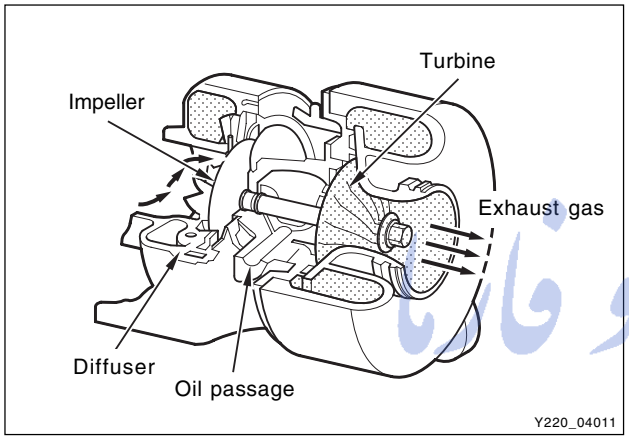

The radial type has the impeller plate arranged in straight line at the center of shaft and, compared to the backward type, is being widely used as it is simple, easy to manufacture and appropriate for high speed rotation. As the impeller rotates in the housing with the diffuser installed in it, the air receives centrifugal force to be accelerated in the direction of housing's outer circumference and flows into the diffuser.

As surface of the passage increases, air flown into the diffuser transforms its speed energy into pressure energy and flows into the intake manifold where the pressurized air is supplied to cylinder each time the intake valve of cylinder opens up. Therefore, the efficiency of compressor is determined by the impeller and diffuser.

امداد خودرو فارما
تلفن شبانه روزی: ۰۲۱-۸۸۸۶۲۰۸۵
FarmaSOS.com

▶ Turbine

The turbine is wings installed at the exhaust end where, by the pressure of exhaust gas, it rotates the compressor and performs the role of transforming heat energy of exhaust gas into torque energy. The radial type is used as the turbine's wings. Therefore, during operation of the engine, the turbine receives temperature of exhaust gas and it rotates in high speed, it requires to have sufficient rigidity and heat resisting property.

During operation of the engine, exhaust gas discharged through the exhaust valve of each cylinder makes turbine rotate by coming in contact with the turbine's wings from the outer circumference within housing of the turbine and is exhausted through the exhaust manifold. At the same time, as the impeller is on the same shaft, it rotates.

▶ Floating Bearing

Floating Bearing is a bearing, which supports the turbine shaft that rotates at about 10,000 to 15,000 rpm. It could be rotated freely between the housing and the shaft as it gets lubricated by oil being supplied from the engine.

Notice

Stopping the engine immediately after driving at high speed stops oil from being supplied to the bearing and may cause it to get burnt. Therefore, the engine must be stopped after cooling the turbo system by sufficiently idling the engine.

▶ Booster Pressure Control Valve Unit (Turbo Charger Actuator)

In order to reduce discharging of hazardous exhaust gas and to avoid the engine's overrun the turbo charger must be appropriately controlled. The maximum turbo charging pressure must be controlled as excessive increase in the pressure and power output can cause critical damages to the engine. In order to control these, the booster pressure control valve is installed on the turbo charger.

The difference of the booster pressure control between the existing IDI engine and DI engine is that in IDI engine, booster pressure of the intake manifold operates the booster pressure control valve connected directly to the turbo charger whereas in DI engine, the control is achieved by utilizing vacuum modulator (vacuum from a vacuum pump) designed to control the booster pressure control valve. It operates booster pressure control valve by supplying electrical power to the vacuum modulator having the amount of air being flown into the HFM sensor from the engine's ECU as the base signal.

Refer to the EGR section in following pages for the function of turbo charger and HFM sensor in exhaust system.

Booster pressure control valve unit and vacuum modulator

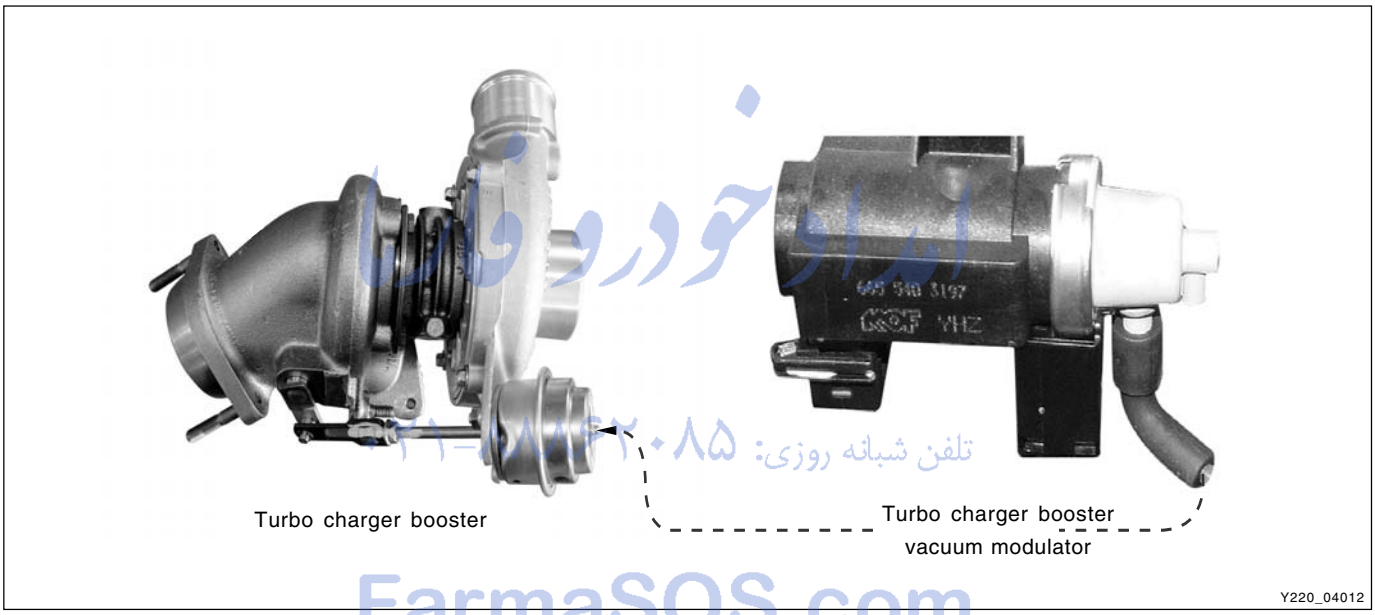

امداد خودرو
تلفن شبانه روزی: ۰۸۵-۳۲۴۲۰۸۵
FarmaSOS.com

CHANGED BY	
EFFECTIVE DATE	
AFFECTED VIN	

▶ Diagnosis and Maintenance for Turbo Charger System

Cautions During Driving

The following lists cautions to take during test drive and on the turbo charger vehicle, which must be considered during the operation;

1. It's important not to drastically increase the engine rpm starting the engine. It could make rotation at excessive speed even before the journal bearing is lubricated and when the turbo charger rotates in poor oil supply condition, it could cause damage of bearing seizure within few seconds.
2. If the engine is running radically after replacing the engine oil or oil filter brings poor oil supply condition. To avoid this, it's necessary to start off after idling the engine for about 1 minute allowing oil to circulate to the turbo charger after the replacement.
3. When the engine is stopped abruptly after driving at high speed, the turbo charger continues to rotate in condition where the oil pressure is at '0'. In such condition, an oil film between the journal bearing and the housing shaft journal section gets broken and this causes abrasion of the journal bearing due to the rapid contact. The repeat of such condition significantly reduces life of the turbo charger. Therefore, the engine should be stopped possibly in the idle condition.

Notice

After string for long period of time during winter season or in the low temperature condition where the fluidity of engine oil declines, the engine, before being started, should be cranked to circulate oil and must drive after checking the oil pressure is in normal condition by idling the engine for few minutes.

Inspection of Turbo Charger

When problem occurs with the turbo charger, it could cause engine power decline, excessive discharge of exhaust gas, outbreak of abnormal noise and excessive consumption of oil.

1. Inspection when installed
   - Check the bolts and nuts foe looseness or missing
   - Check the intake and exhaust manifold for looseness or damage
   - Check the oil supply pipe and drain pipe for damages
   - Check the housing for crack and deterioration
2. Inspection of turbine in turbo charger

   Remove the exhaust pipe at the opening of the turbine and check, with a lamp, the existence of interference of housing and wheel, oil leakage and contamination (at blade edge) of foreign materials.
   - Interference: In case where the oil leak sign exists, even the small traces of interferences on the turbine wheel mean, most of times, that abrasion has occurred on the journal bearing. Must inspect after overhauling the turbo charger.
   - Oil Leakage: Followings are the reasons for oil leakage condition;
     - Problems in engine: In case where the oil is smeared on inner wall section of the exhaust gas opening.
     - Problems in turbo charger: In case where the oil is smeared on only at the exhaust gas outlet section.

Notice

Idling for long period of time can cause oil leakage to the turbine side due to low pressure of exhaust gas and the rotation speed of turbine wheel. Please note this is not a turbo charger problem.

farmasos.com

- Oil Drain Pipe Defect

  In case where oil flow from the turbo charger sensor housing to the crank case is not smooth would become the reason for leakage as oil builds up within the center housing. Also, oil thickens (sludge) at high temperature and becomes the indirect reason of wheel hub section. In such case, clogging and damage of the oil drain pipe and the pressure of blow-by gas within the crank case must be inspected.

- Damages from Foreign Materials

  When the foreign materials get into the system, it could induce inner damage as rotating balance of the turbo charger gets out of alignment.

Inspection of Turbine

Thoroughly check the followings.

Notice

Must absolutely not operate the turbo charger with the compressor outlet and inlet opened as it could damage the turbo charger or be hazardous during inspection.

- Interference: In case where is trace of interference or smallest damage on the compressor wheel means, most of times, that abrasion has occurred on the journal bearing. Must inspect after the overhaul.
- Oil Leakage: The reason for oil leakage at the compressor section is the air cleaner, clogged by substances such as dust, causes the compressor inlet negative pressure;
  A. Rotating in high speed at no-load for extended period of time can cause oil leakage to the compressor section as oil pressure within the center housing gets higher than pressure within the compressor housing.
  B. Overuse of engine break (especially in low gear) in down hill makes significantly low exhaust gas energy compared to the time where great amount of air is required during idling conditions of the engine. Therefore, amount of air in the compressor inlet increases but the turbo charge pressure is not high, which makes negative pressure at the compressor section causing the oil leakage within the center housing.

Notice

No problem will occur with the turbo charger if above conditions are found in early stage but oil leaked over long period of time will solidify at each section causing to breakout secondary defects.

- Damages by foreign materials: In case where the compressor wheel is damaged by foreign materials requires having an overhaul. At this time, it's necessary to check whether the foreign materials have contaminated intake/exhaust manifold or inside of engine.

امداد خودرو فارما
۰۲۱-۸۸۸۶۲۰۸۵ پاسخگوی ۲۴ ساعته روزی
FarmaSOS.com

CHANGED BY	
EFFECTIVE DATE	
AFFECTED VIN	

Path of Turbo Charger Defect

The following tries to understand the defects that can occur with vehicle installed with the turbo charger and to manage the reasons of such defects.

1. In case where oil pan/oil pipe has been contaminated, oil filter is defected and where adhesive of gaskets has been contaminated into the oil line.

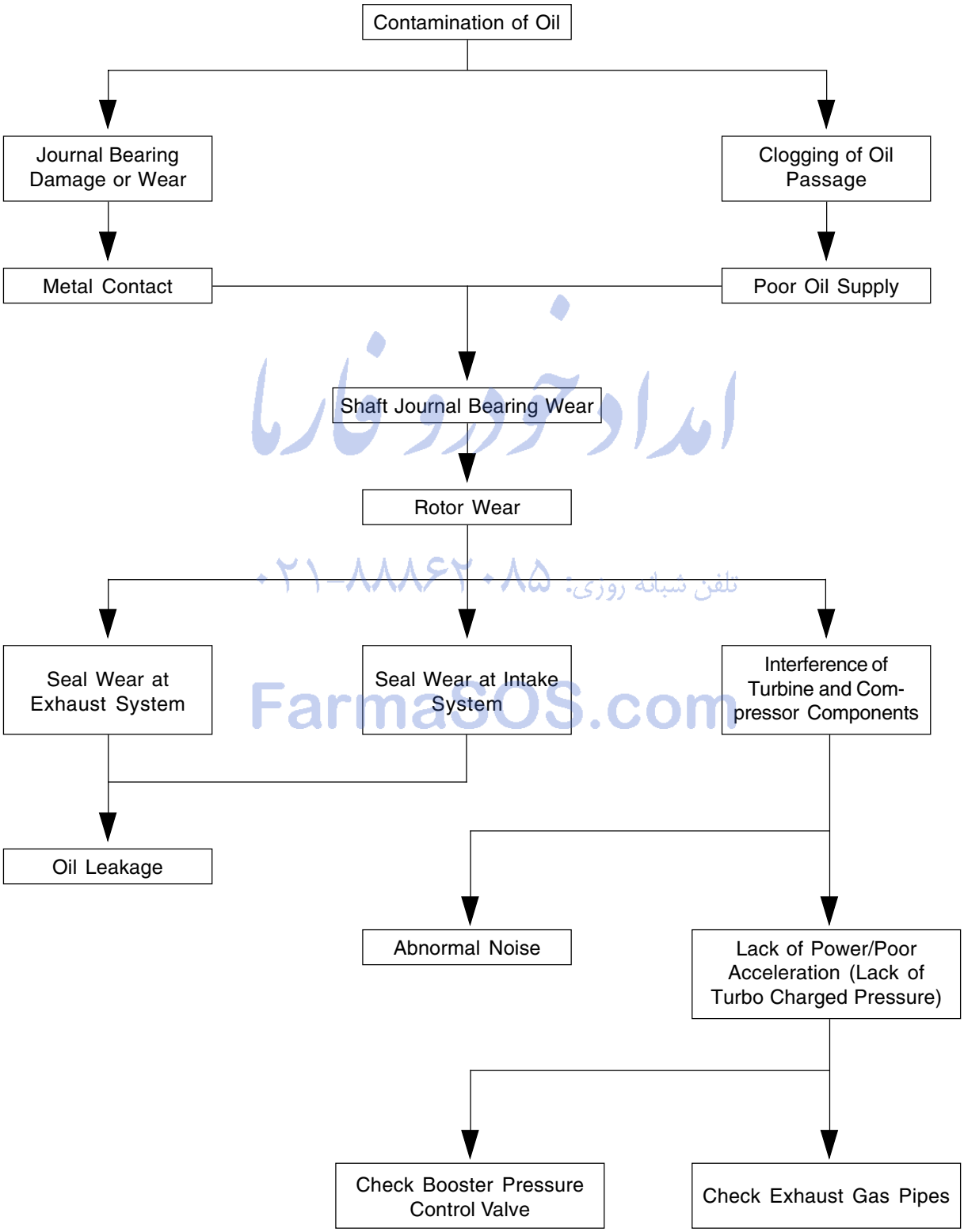

امداد خودرو فارما
تلفن شبانه روزی: ۰۲۱-۸۸۸۶۲۰۸۵
FarmaSOS.com

2. Oil Pump Defect: Rapid over-loaded driving after replacing oil filter and oil and clogging of oil line.

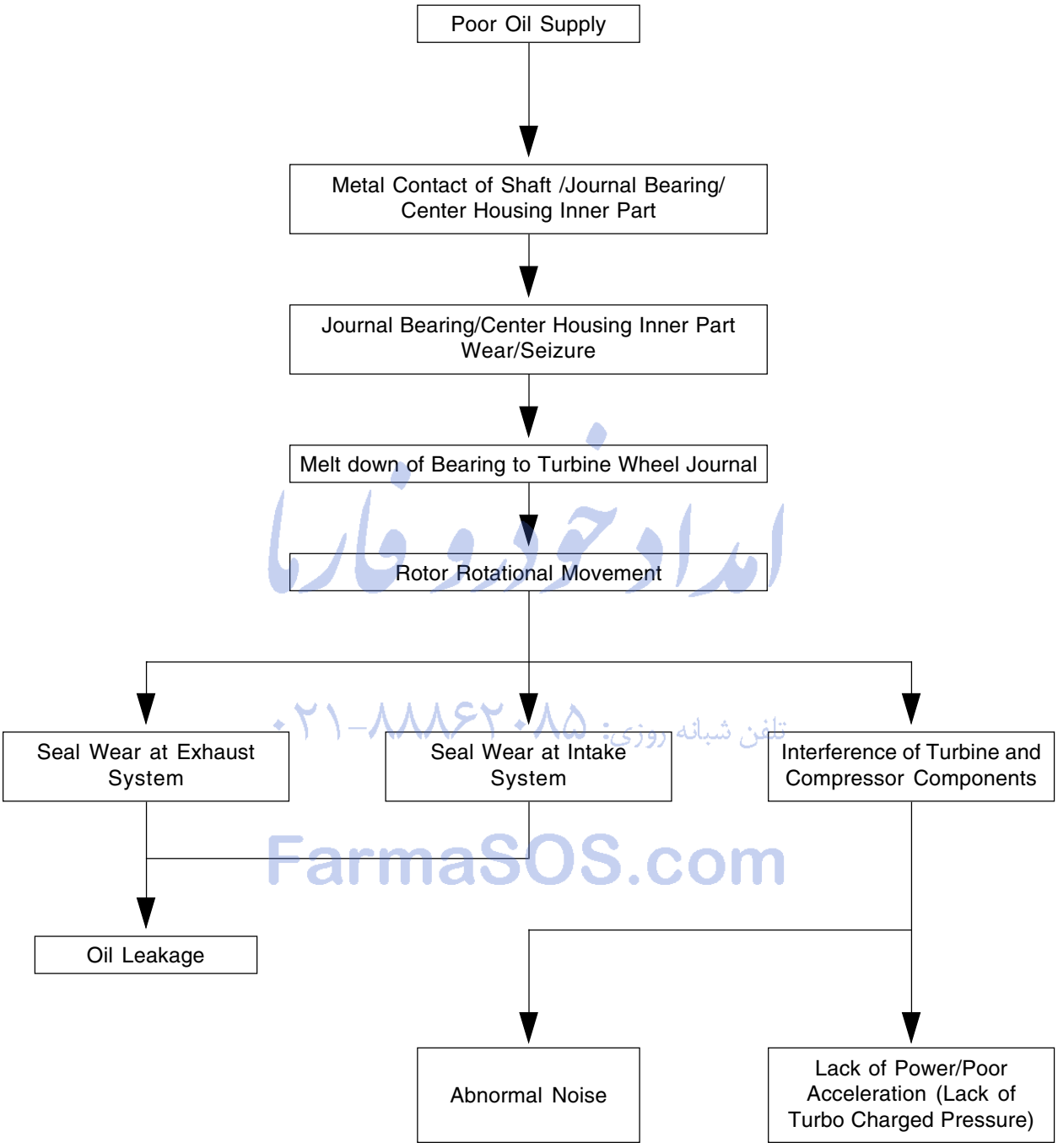

امداد خودرو فارما
تلفن شبانه روزی: ۰۲۱-۸۸۸۶۲۰۸۵
FarmaSOS.com

3. Turbine Side: Inflow of foreign materials from engine
Compressor Side: such as air filter, muffler and nut

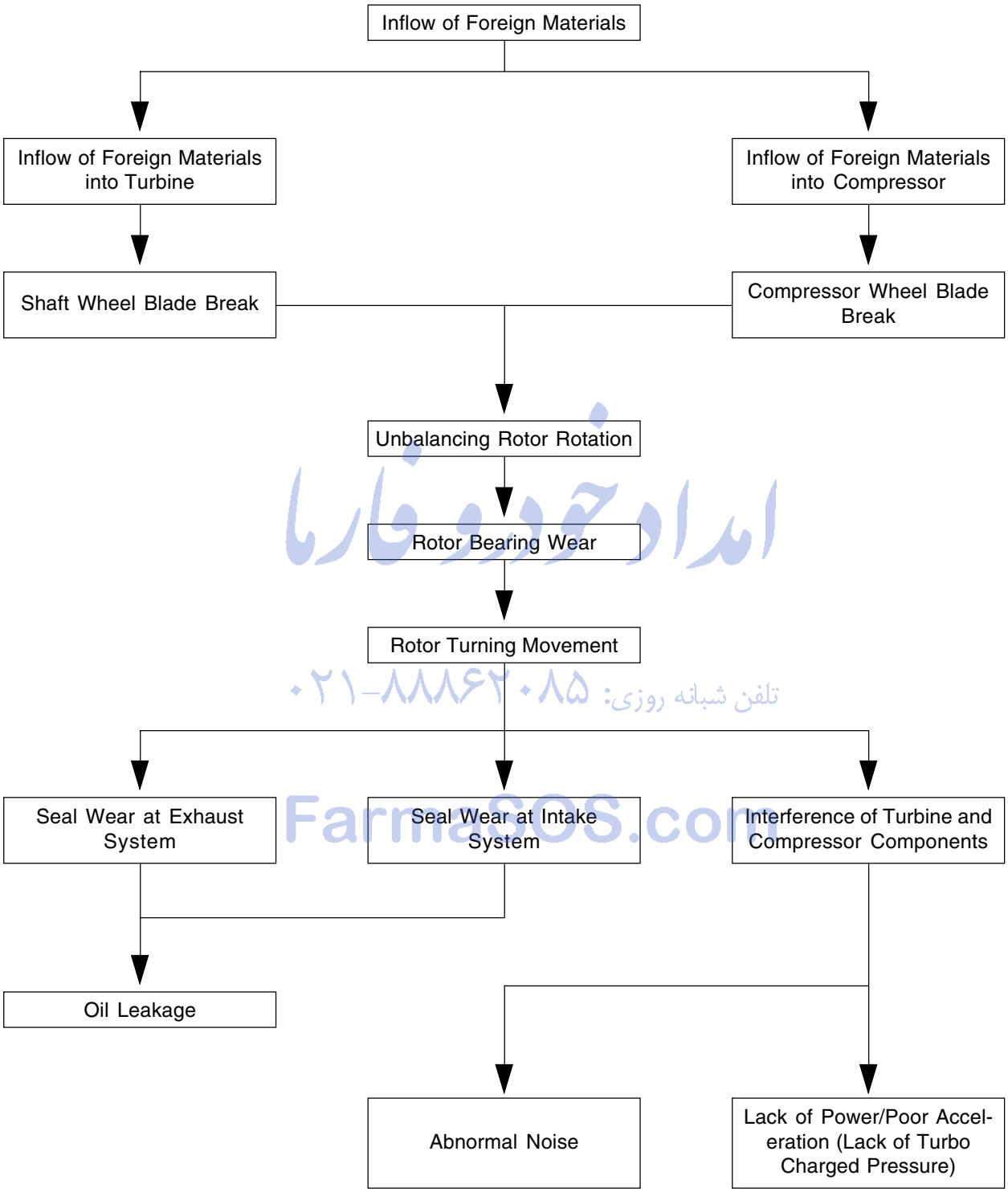

امداد خودرو فارما
تلفن شبانه روزی: ۰۲۱-۸۸۸۶۲۰۸۵
FarmaSOS.com

4. Defects caused by reasons other than that of the Turbo Charger.

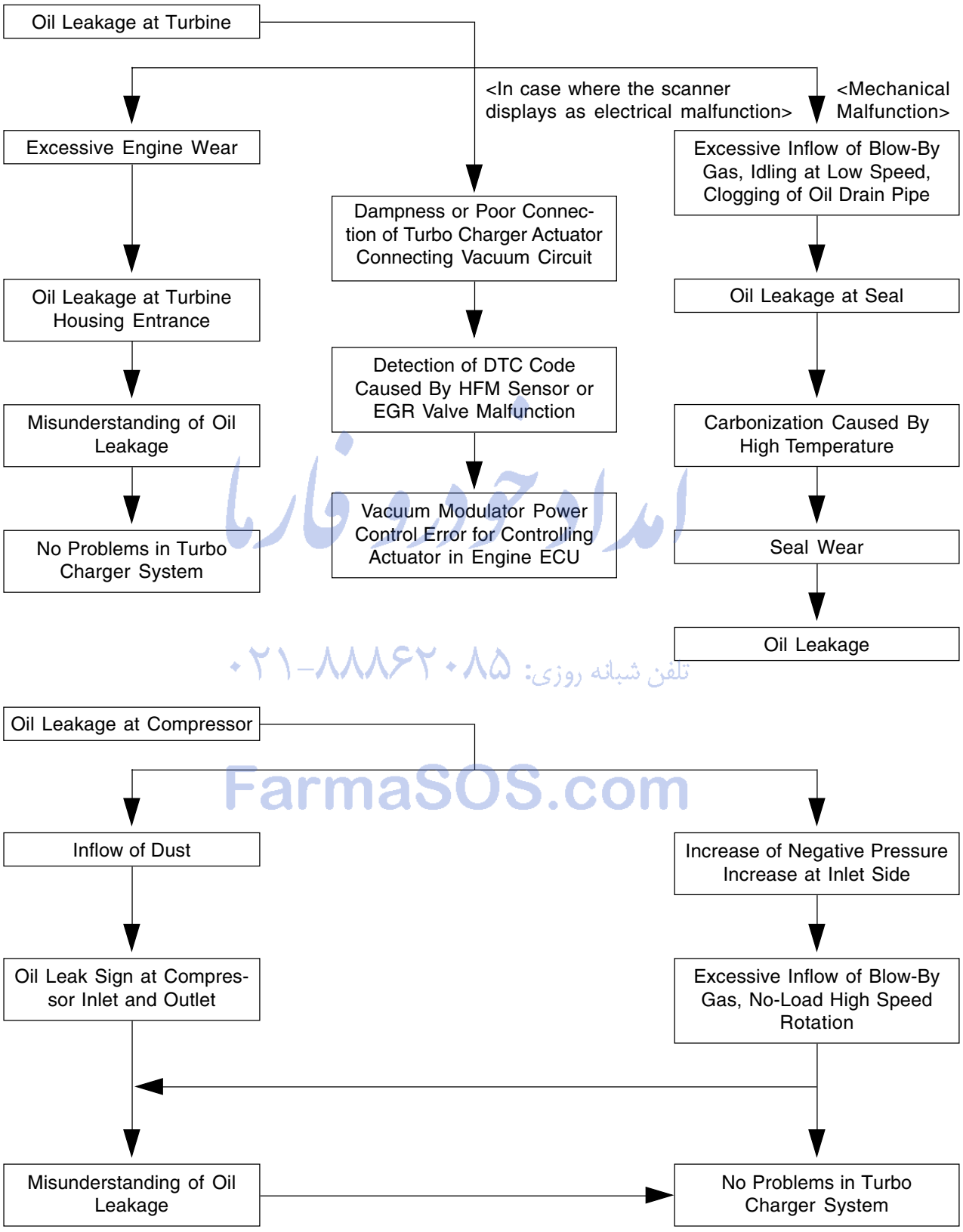

امداد خودرو فارما
تلفن شبانه روزی: ۰۲۱-۸۸۸۶۲۰۸۵
FarmaSOS.com

How to Diagnose

The followings are cautions to take in handling defects of turbo charger, which must be fully aware of;

▶ Cautions When Examining the Defects:

1. After stopping the engine, check whether the bolts on pipe connecting section are loose as well as the connecting condition of vacuum port and modulator, which is connected to the actuator.
2. During idling of the engine, check for leakage in the connecting section of pipe (hoses and pipes, duct connections, after the turbo charger) by applying soap water. The leakage condition in the engine block and turbine housing opening can be determined by the occurrence of abnormal noise of exhaust.
3. By running the engine at idle speed, abnormal vibration and noise can be checked. Immediately stop the engine when abnormal vibration and noise is detected and make thorough inspection whether the turbo charger shaft wheel has any damages as well as checking the condition of connections between pipes.
4. In case where the noise of engine is louder than usual, there is possibility of dampness in the areas related with air cleaner and engine or engine block and turbo charger. And it could affect the smooth supply of engine oil and discharge. 5. Check for damp condition in exhaust gas when there is sign of thermal discoloration or discharge of carbon in connecting area of the duct.
6. When the engine rotates or in case where there is change in noise level, check for clogging of air cleaner or air cleaner duct or if there is any significant amount of dust in the compressor housing.
7. During the inspection of center housing, inspect inside of the housing by removing the oil drain pipe to check for sludge generation and its attachment condition at shaft area or turbine side.
8. Inspect or replace the air cleaner when the compressor wheel is damaged by inflow of foreign materials.
9. Inspect both side of the turbo charger wheel after removing inlet and outlet pipe of the turbo charger.
   - Is the rotation smooth when the rotor is rotated by hand?
   - Is the movement of bearing normal?
   - Inspect whether there has been any signs of interference between two wheels.

امداد خودرو ماما
تلفن شبانه روزی: ۰۲۱-۸۸۸۶۲۰۸۵
FarmaSOS.com

Notice

It's important not to drive the engine when the intake manifold hose has been removed.

▶ Diagnosis and Measure

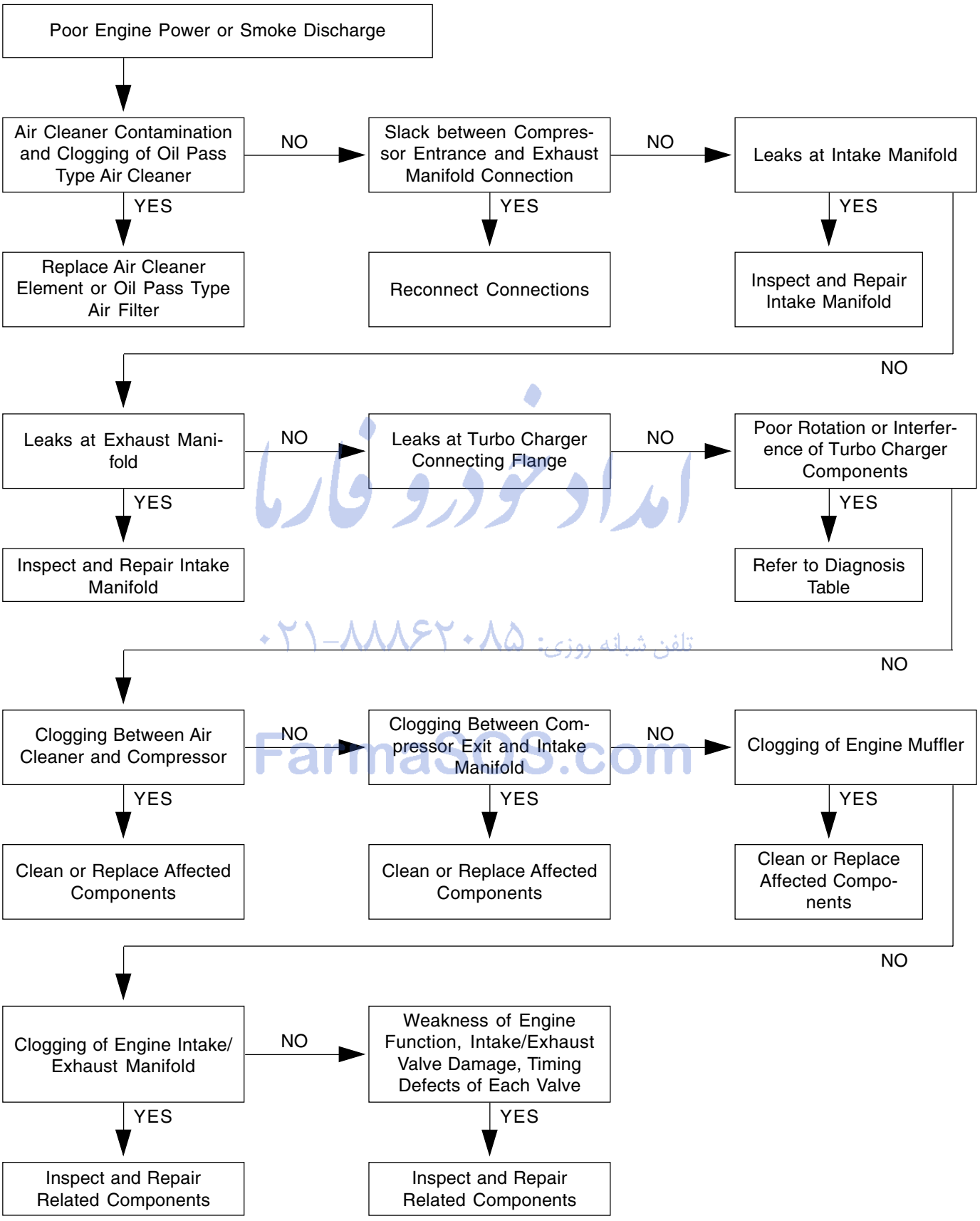

امداد خودرو فارما
تلفن شبانه روزی: ۰۲۱-۸۸۸۶۲۰۸۵
FarmaSOS.com

Before Diagnosis

The base of making diagnosis on the EGR related system is the inspection on the connections of the vacuum hoses in related system as the first priority. When abnormal condition occurs with the EGR system, the basic approach is, as described in prior sentence, making detail inspections of vacuum circuits of each system before connecting the scan tool or vacuum tester. It is necessary to manually check on the connections if there are any slacks or loose circuits even if the visual inspection shows vacuum hose as being connected. If there are not any problems then the next inspection area is the connections of the system connectors. Most problems with the occurrence of system malfunction are from conditions of vacuum line and connector connections and the causes from the malfunction of mechanical mechanism is actually very few.

For example, when there are no problems with basic components, let's assume that there is a vehicle having vacuum leak from connection slack in the vacuum line between EGR vacuum modulator and EGR valve. This vehicle, due to the driving condition or, according to the circumstances, smog or other conditions, could create customer's complaint and by connecting the scanning device could display as the malfunction of the EGR valve's potentiometer.

As previously explained, this car has a separate controller to control the Hoover EGR and, in accordance with various input element, the controller controls EGR valve by regulating the force of vacuum being applied to the EGR valve through PWM control. At this time, the controller has to receive feedback whether the EGR valve operates correctly according to the value sent to the EGR modulator and this role is performed by the EGR potentiometer located at top section of the EGR valve.

In other word, the controller sent correct output value to the EGR vacuum modulator but, due to the leakage of vacuum, signal of required value can not be received from the EGR potentiometer causing to display as malfunction of related parts.

As a reference, the EGR valve of diesel vehicle (DI Engine) controlling from the engine ECU to EGR system has different shape than the Hoover EGR valve because the EGR valve's operation signal in the DI engine is performed by the HFM sensor instead of the EGR potentiometer.

This principle is that when the EGR valve opens up to flow exhaust gas into the intake unit the amount of fresh air, comparatively, will be reduced. The DI engine ECU receives feedback signal of change in amount of air being passed through the HFM sensor according to the opening amount of the EGR valve.

FarmaSOS.com

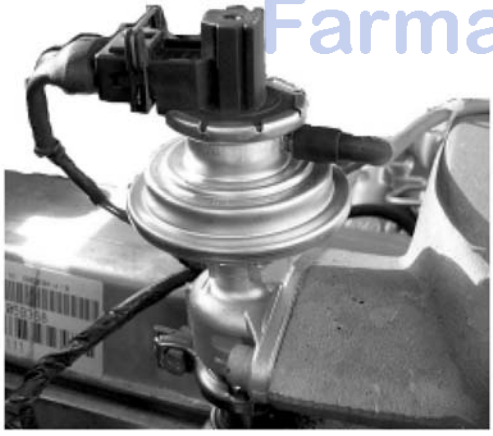

Hoover EGR System for IDI Engine
(Including the EGR Valve Potentiometer)



EGR System for DI Engine

Y220_04013

The other big difference between the Hoover EGR and EGR controller for DI engine is that from two vacuum modulator, one is same as being the modulator for EGR valve whereas the Hoover EGR system's the other modulator controls ALDA of injection pump and the DI engine's the other modulator controls waist gate of the turbo charger.

This difference is in accordance with the difference in fuel injection method where the IDI engine has mechanical injection system and DI engine is capable of making electronically controlled fuel injection.

In other word, to reduce the amount of the fuel injection in no-load rapid acceleration mode, the IDI engine's Hoover EGR utilizes solenoid valve to disconnect the connection circuit between intake manifold and ALDA causing negative pressure to occur in the vacuum modulator to reduce the amount of fuel injection. When DI engine, basing input signal from the related sensors such as acceleration pedal sensor and engine RPM, recognizes that current mode is the no-load rapid acceleration mode it reduces the amount of fuel injection by sending short electrical signal to the injector. Therefore, disregarding the modulator for the EGR valve in DI engine, one must keep in mind that the other modulator is used to control the booster pressure valve in turbo charger.

امداد خودرو فارما
تلفن شبانه روزی: ۰۲۱-۸۸۸۶۲۰۸۵
FarmaSOS.com

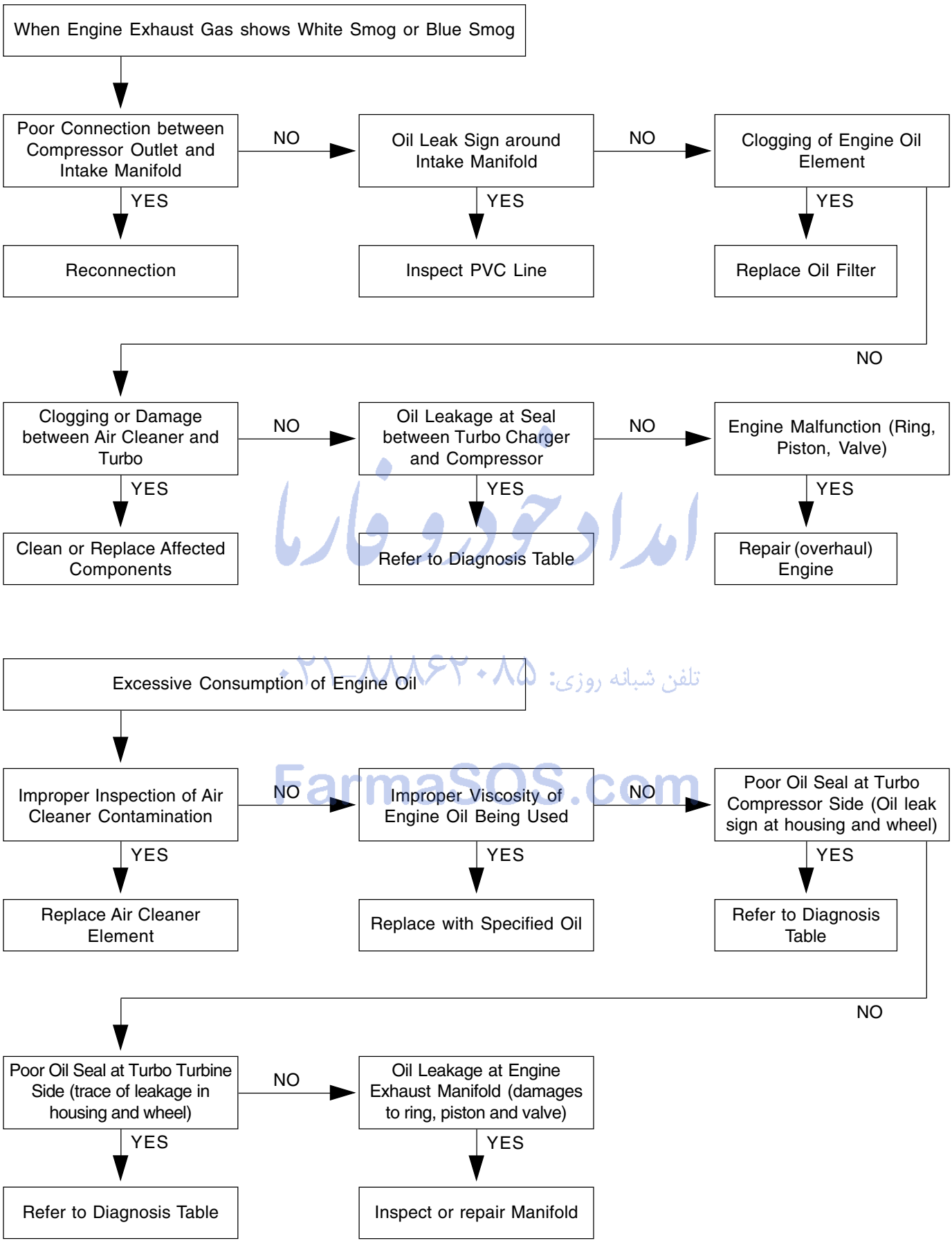

امداد خودرو فارما
تلفن شبانه روزی: ۰۲۱-۸۸۸۶۲۰۸۵
FarmaSOS.com

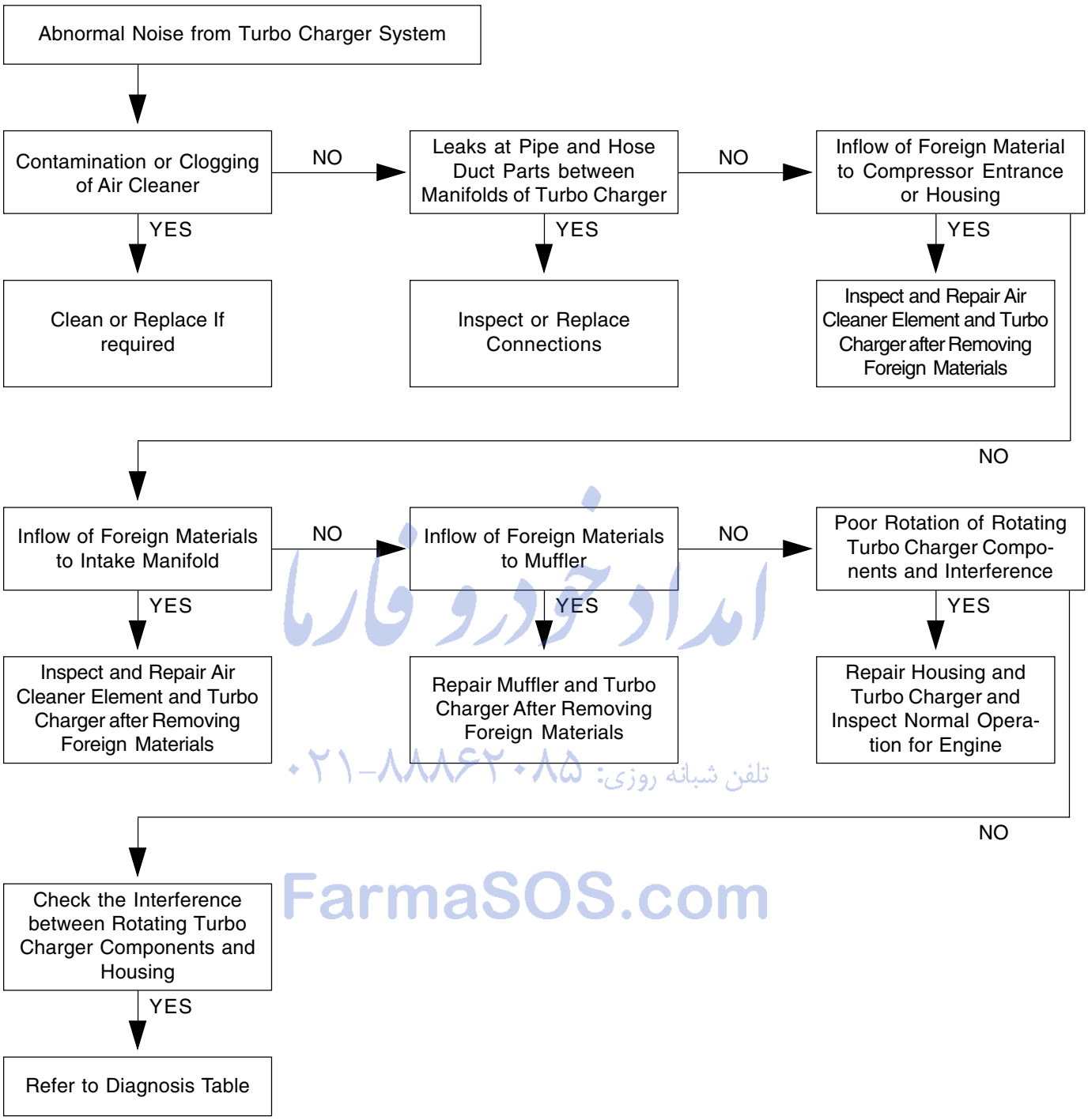

امداد خودرو فارما
تلفن شبانه روزی: ۰۲۱-۸۸۸۶۲۰۸۵
FarmaSOS.com

CHANGED BY	
EFFECTIVE DATE	
AFFECTED VIN	

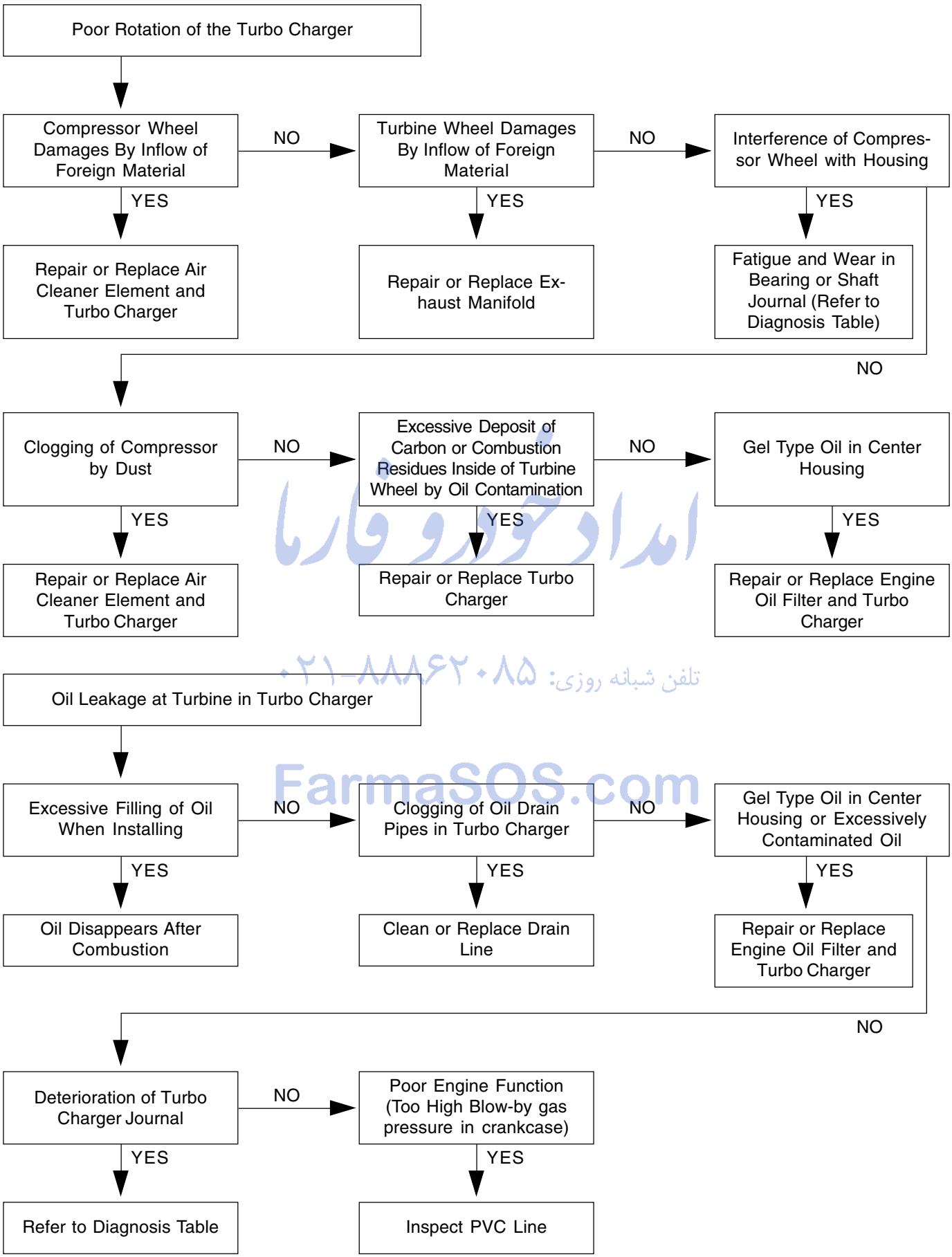

امداد خودرو فارما
تلفن شبانه روزی: ۰۲۱-۸۸۸۶۲۰۸۵
FarmaSOS.com

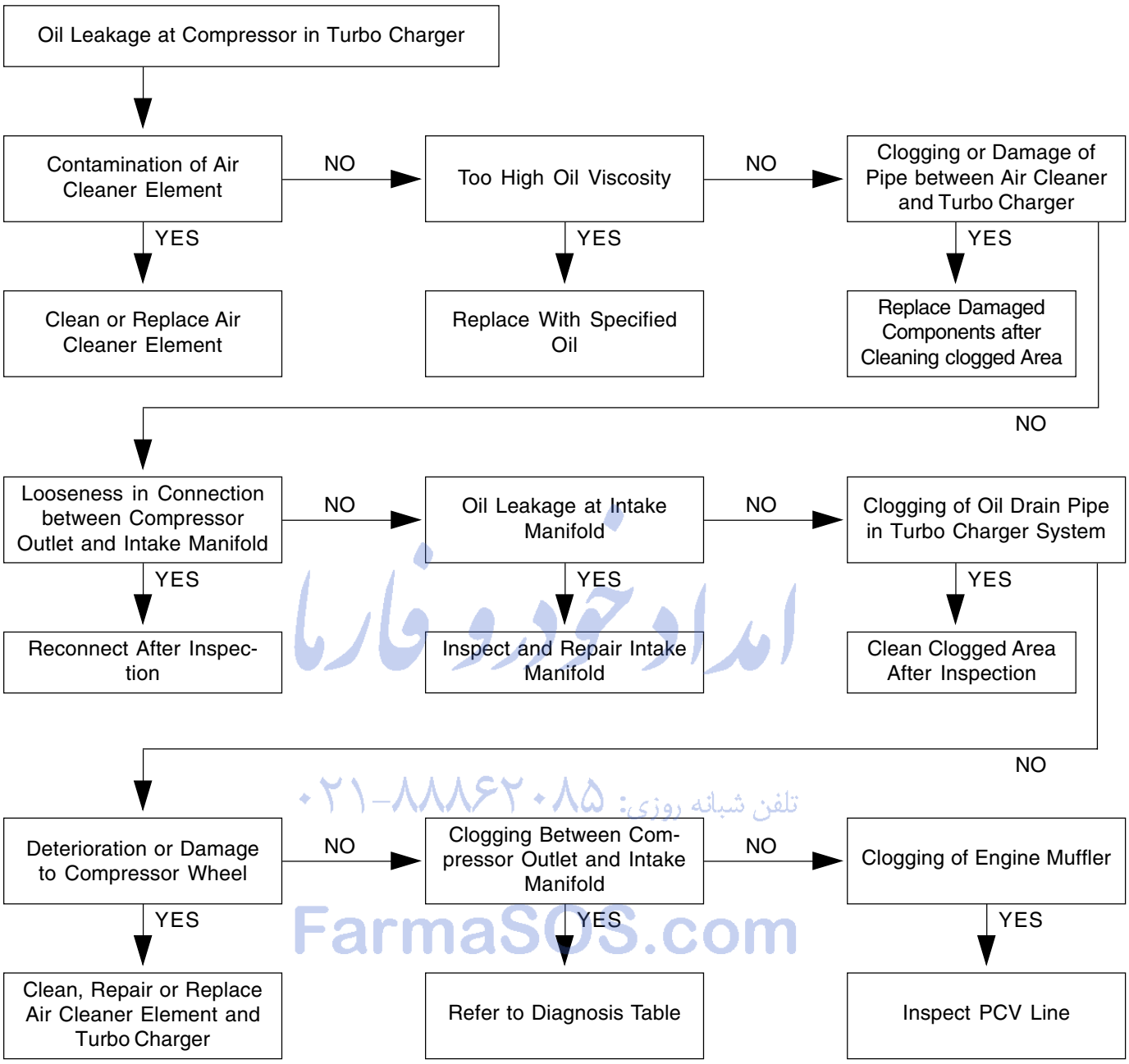

امداد خودرو فارما
تلفن شبانه روزی: ۰۲۱-۸۸۸۶۲۰۸۵
FarmaSOS.com

CHANGED BY	
EFFECTIVE DATE	
AFFECTED VIN	

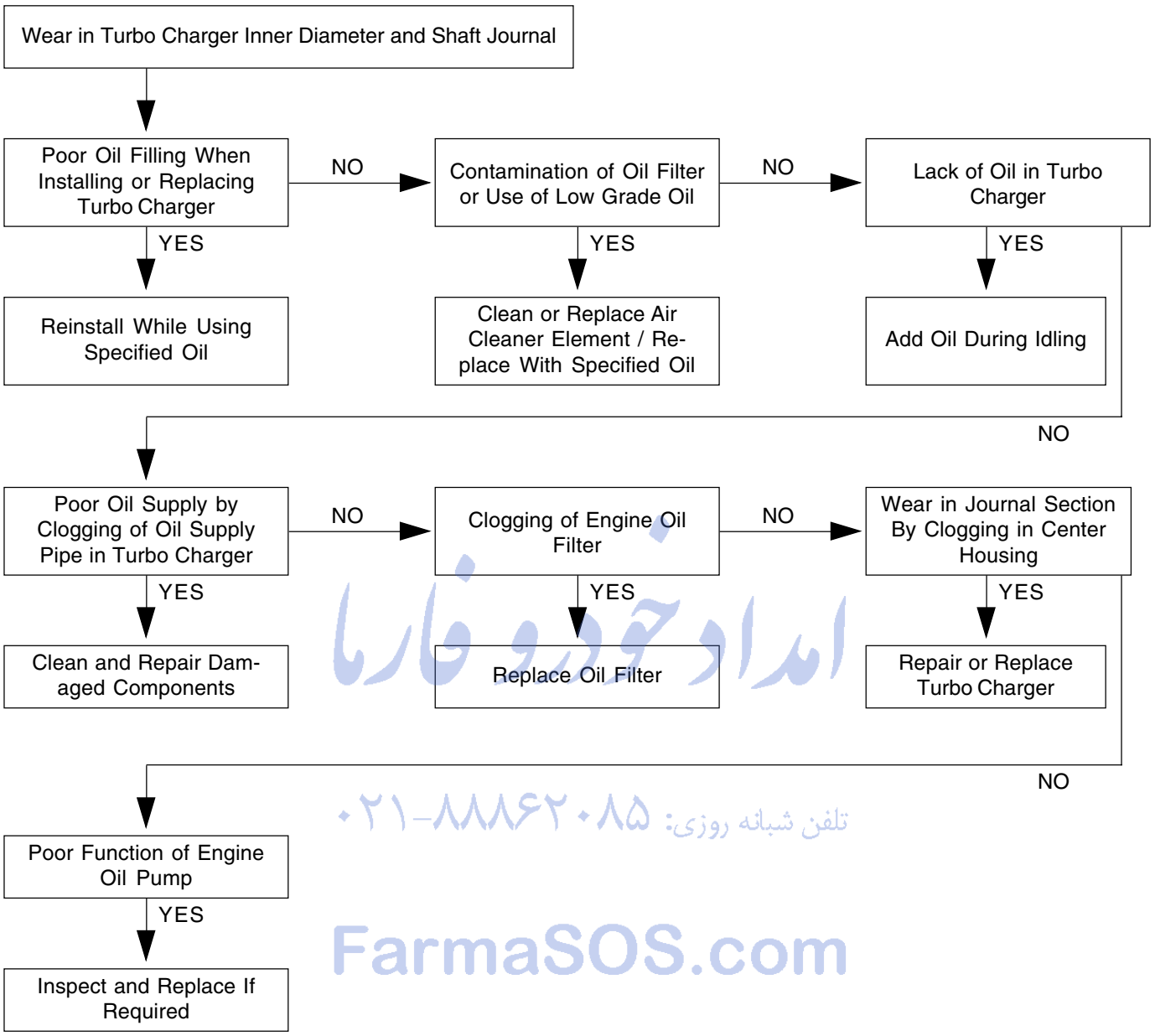

امداد خودرو فارما
تلفن شبانه روزی: ۰۲۱-۸۸۸۶۲۰۸۵
FarmaSOS.com

※ For other diagnosis, refer to Diagnosis section.

Turbo Charger Assembly - Removal and Installation

1. Remove the drain plug and drain the engine oil from the oil pan.

   Installation Notice

Tightening torque	25 ± 2.5 Nm

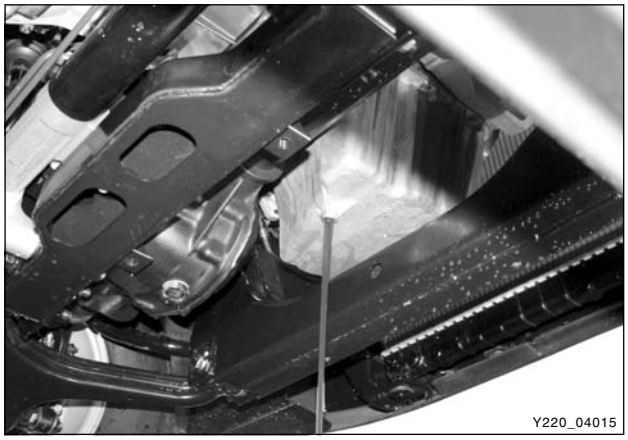

2. Remove the vacuum hose and inlet hose from the turbo charger.

   Installation Notice

Tightening torque	6 ~ 7 Nm

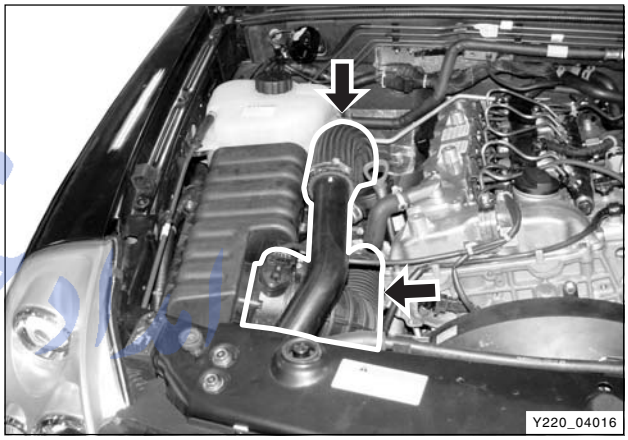

3. Remove the bolts and nuts at the exhaust manifold in turbo charger.

   Installation Notice

Tightening torque	25 ± 2.5 Nm

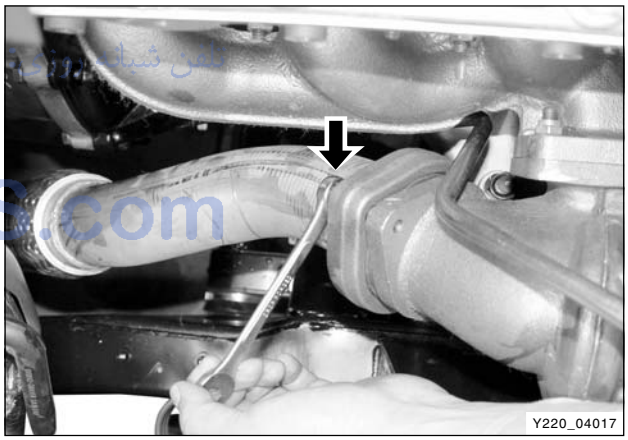

4. Remove the lower and upper bolts at turbo charger oil supply pipe.

   Installation Notice

Tightening torque	23 ± 2.3 Nm

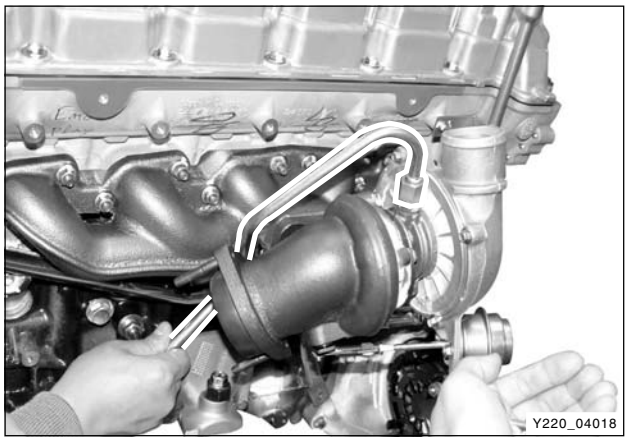

FarmaSOS.com

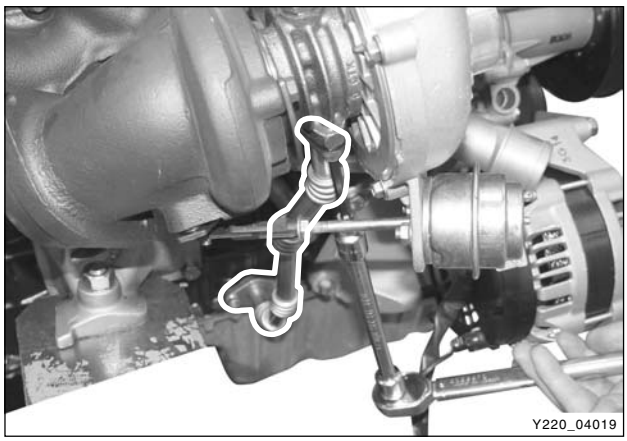

5. Remove the lower bolts at turbo charger oil return pipe.

Notice

Replace the steel gasket with new one.

Installation Notice

Tightening torque	25 ± 2.5 Nm

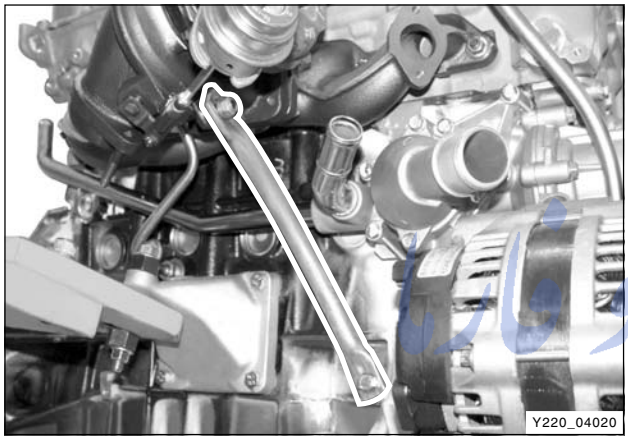

6. Remove the lower bolt at turbo charger bracket.
7. Remove the turbo charger bracket bolts.

Installation Notice

Tightening torque	32 ± 3.2 Nm

Notice

Use only 12 1/2" wrench.

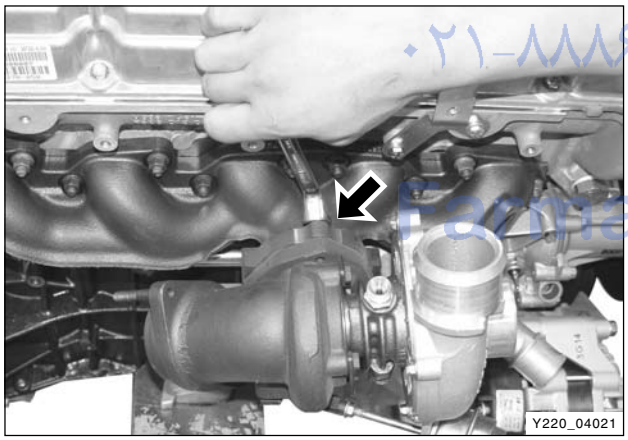

8. Remove the bolts and nuts at the turbo charger and the exhaust manifold.

Installation Notice

Tightening torque	25 ± 2.5 Nm

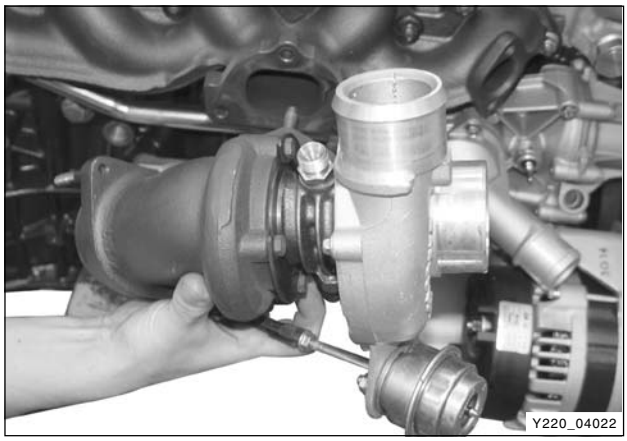

9. Remove the turbo charger assembly.
10. Install in the reverse order of removal.

Notice

- ***Replace the steel gasket with new one.***
- ***To prevent gas leaks, tighten the fasteners with the specified tightening torques.***

امداد خودرو
تلفن ثبت آنلاین ۰۲۱-۸۸۸۶۲۰۸۵
RamaSOS.com

EGR VALVE AND VACUUM MODULATOR

EGR SYSTEM

▶ General Information

EGR system controls the opening vale of EGR valve by transmitting electrical signal (PWM control) from the engine ECU to vacuum modulator. Also, the engine ECU receives the feedback signals of the amount of air flowing through the HFM sensor.

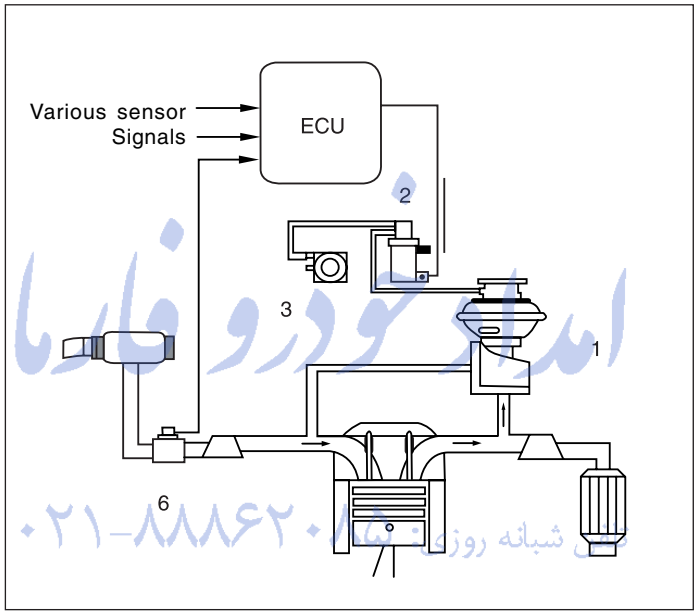

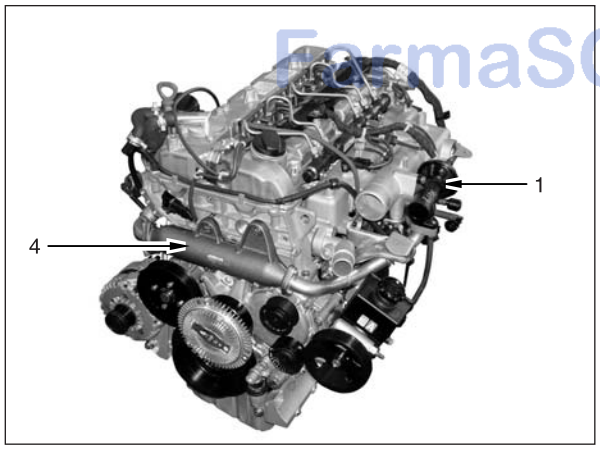

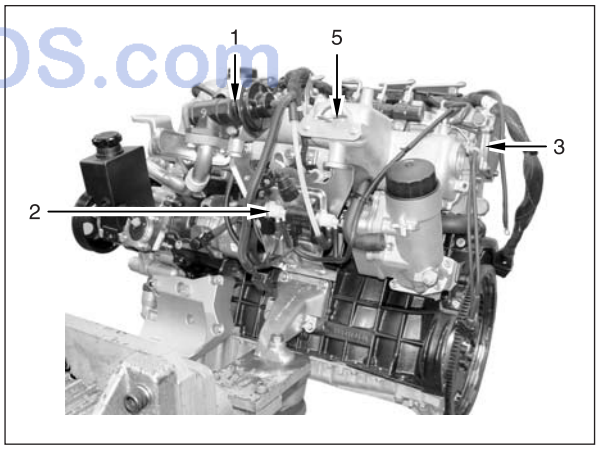

Y220_04023

1. EGR valve
2. Vacuum modulator
3. Vacuum pump
4. EGR center pipe (EGR cooler)
5. Intake manifold
6. Hfm sensor

امداد خودرو فارما
۰۲۱-۸۸۸۶۲۰۱۵ (خطی شبانه روزی)
FarmaSOS.com

CHANGED BY	
EFFECTIVE DATE	
AFFECTED VIN	

EGR VALVE AND TURBO CHARGER ACTUATOR CONTROL VACUUM CIRCUIT

▶ Vacuum Modulator

The biggest difference between the vacuum circuit and layout of the Hoover EGR system after K2004 has been introduced is the location of the vacuum modulator for EGR valve control and the function of the other modulator. In case of EGR equipped vehicle (IDI Engine), it performs the role of controlling the PLA of injection pump whereas, in DI engine, it controls the turbo charger actuator.

DI engine vacuum modulator

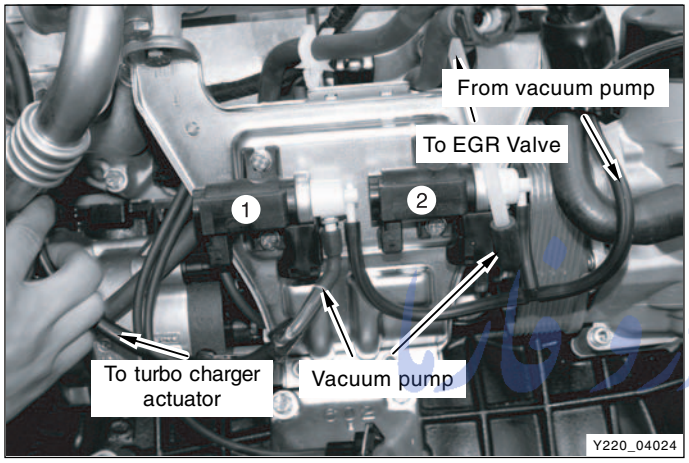

1. EGR valve vacuum modulator
2. Turbo charger booster vacuum modulator

امداد خودرو فارس
تلفن شبانه روزی ۰۲۱-۸۸۸۶۲۰۸۵
FarmaSOS.com

IDI engine vacuum modulator (hoover EGR system - K2004)

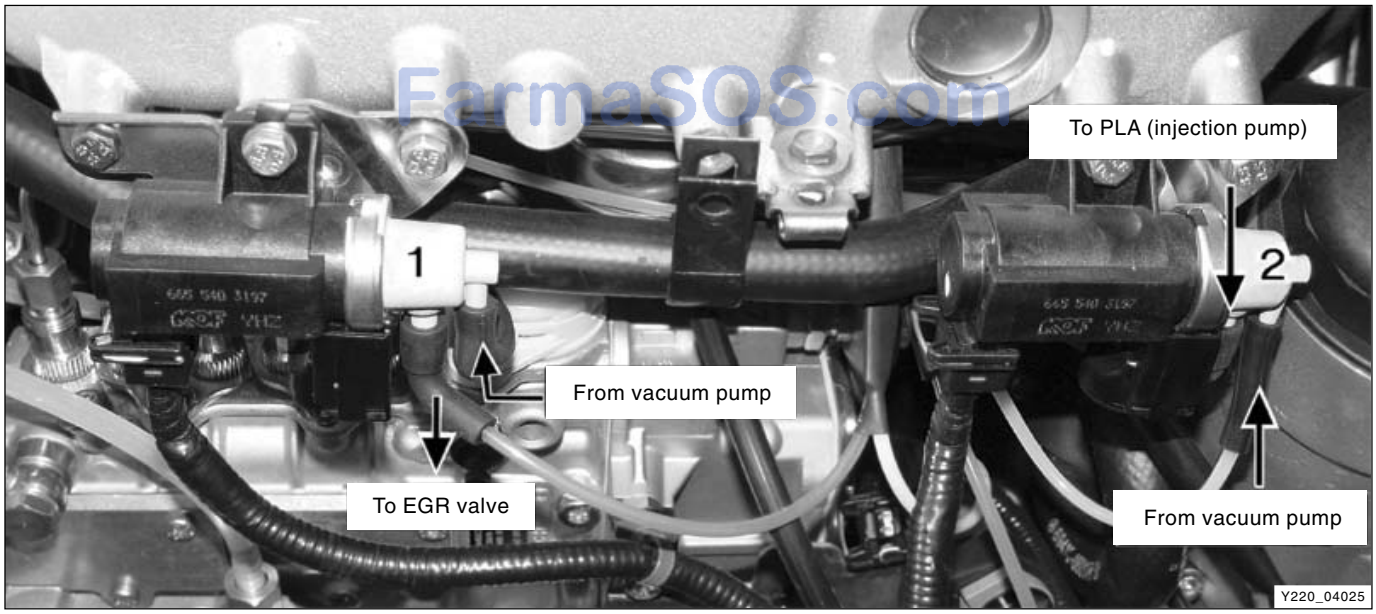

1. Vacuum modulator for EGR valve control
2. Vacuum modulator for injection pump PLA control

▶ Vacuum Modulator and Vacuum Hose

Below figures illustrate vacuum hoses and related parts of EGR or turbo where wrong or poor connection of vacuum hose would display condition of engine irregularity and defect diagnostic codes on the scan tool.

Related with EGR valve

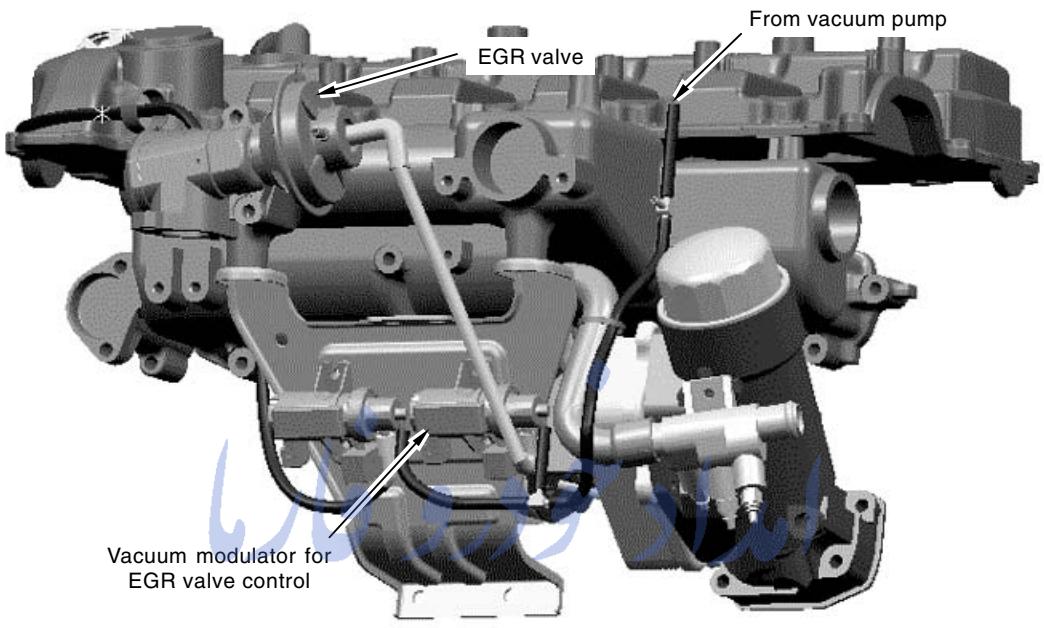

تلفن شبانه روزی: ۰۲۱-۸۸۸۶۲۰۸۵

Related with turbo charger actuator

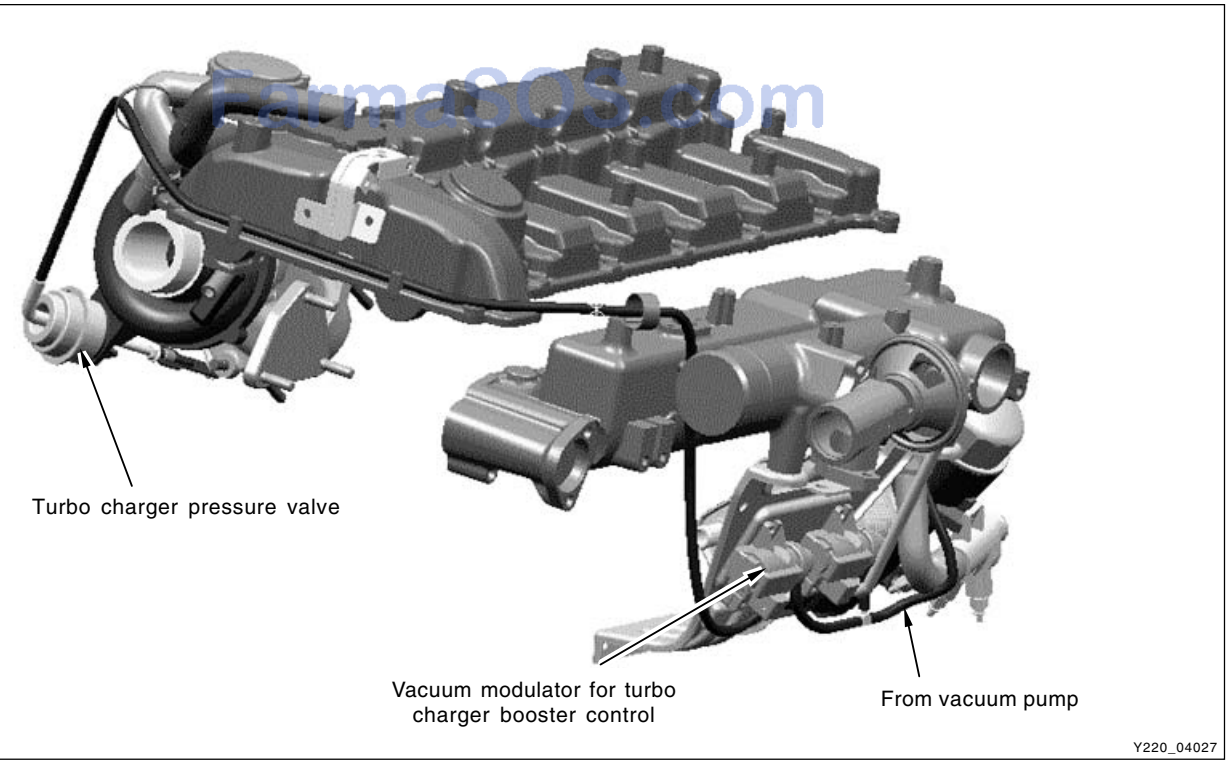

CHANGED BY	
EFFECTIVE DATE	
AFFECTED VIN	

▶ EGR System Diagram

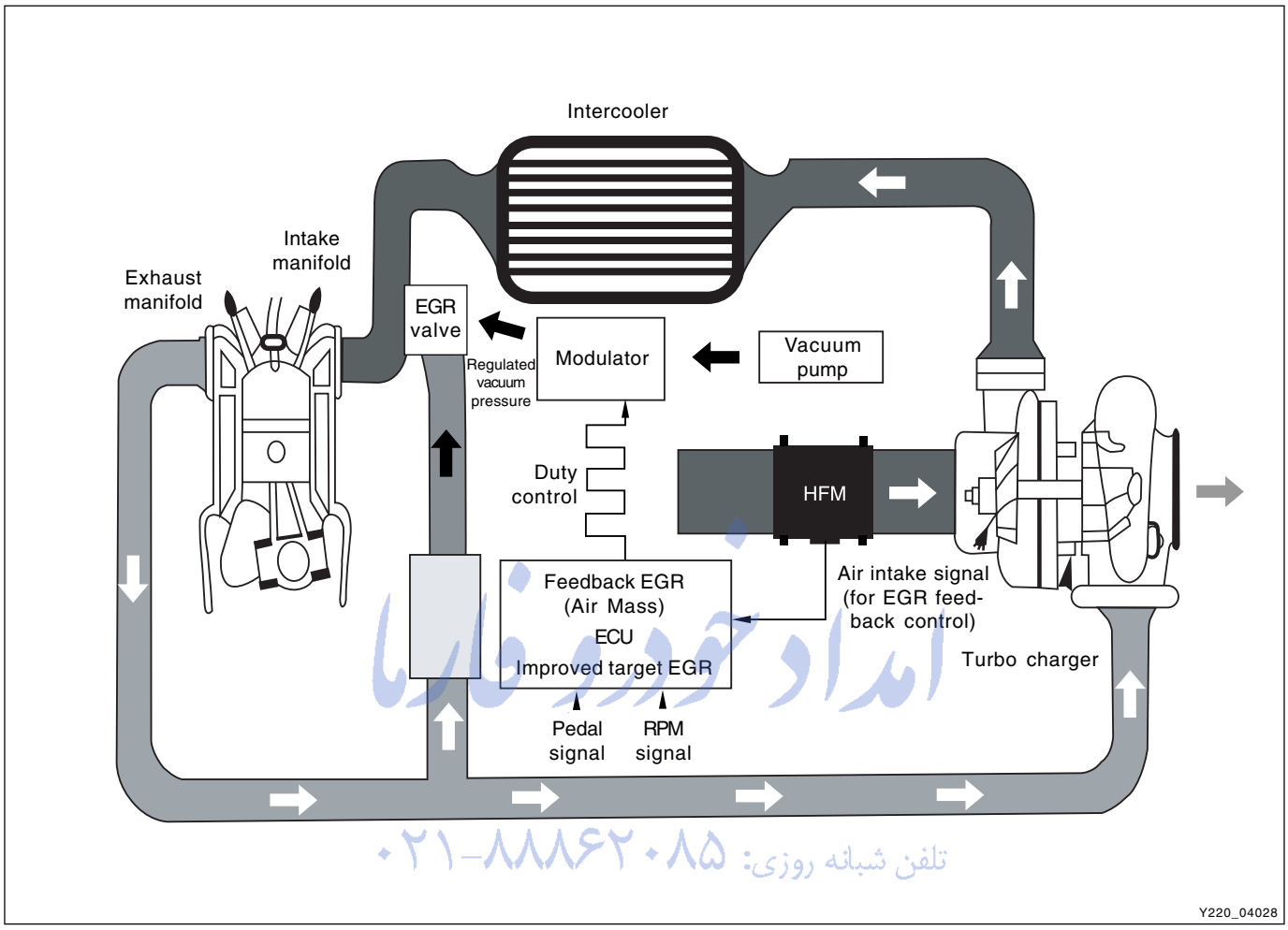

امداد خودرو ماریا
تلفن شبانه روزی: ۰۲۱-۸۸۸۶۲۰۸۵
FarmaSOS.com

EGR Valve

EGR valve recirculates some of exhaust gases to intake system to reduce toxic NOx from engine according to ECU signals.

- EGR valve opening point : -270 mmHg

EGR Modulator

According to ECU signals, the vacuum modulator drives EGR valve by controlling vacuum pressure that is generated by vacuum pump with PWM type controls.

▶ Operation Principle of Vacuum Modulator

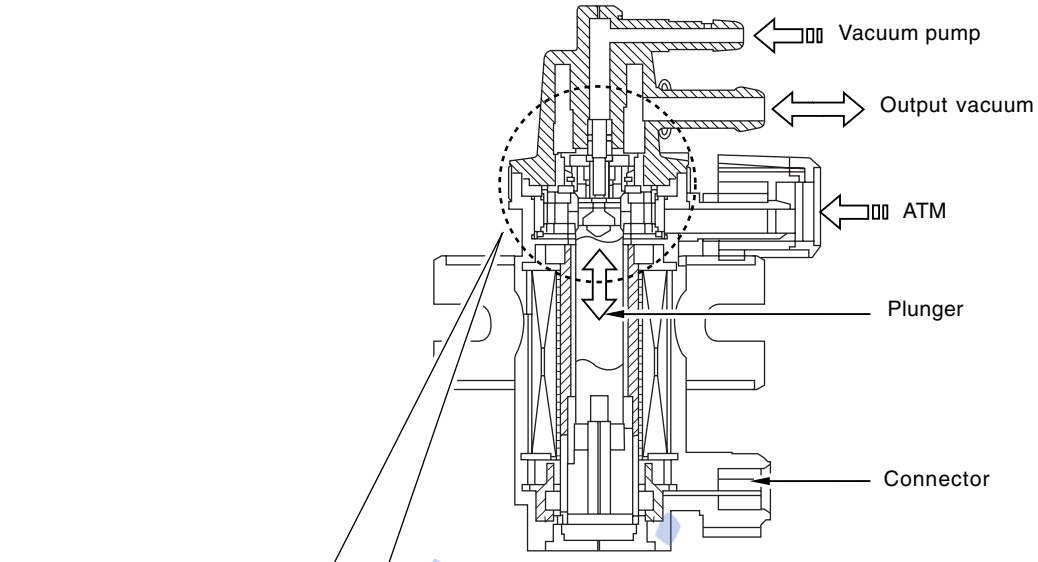

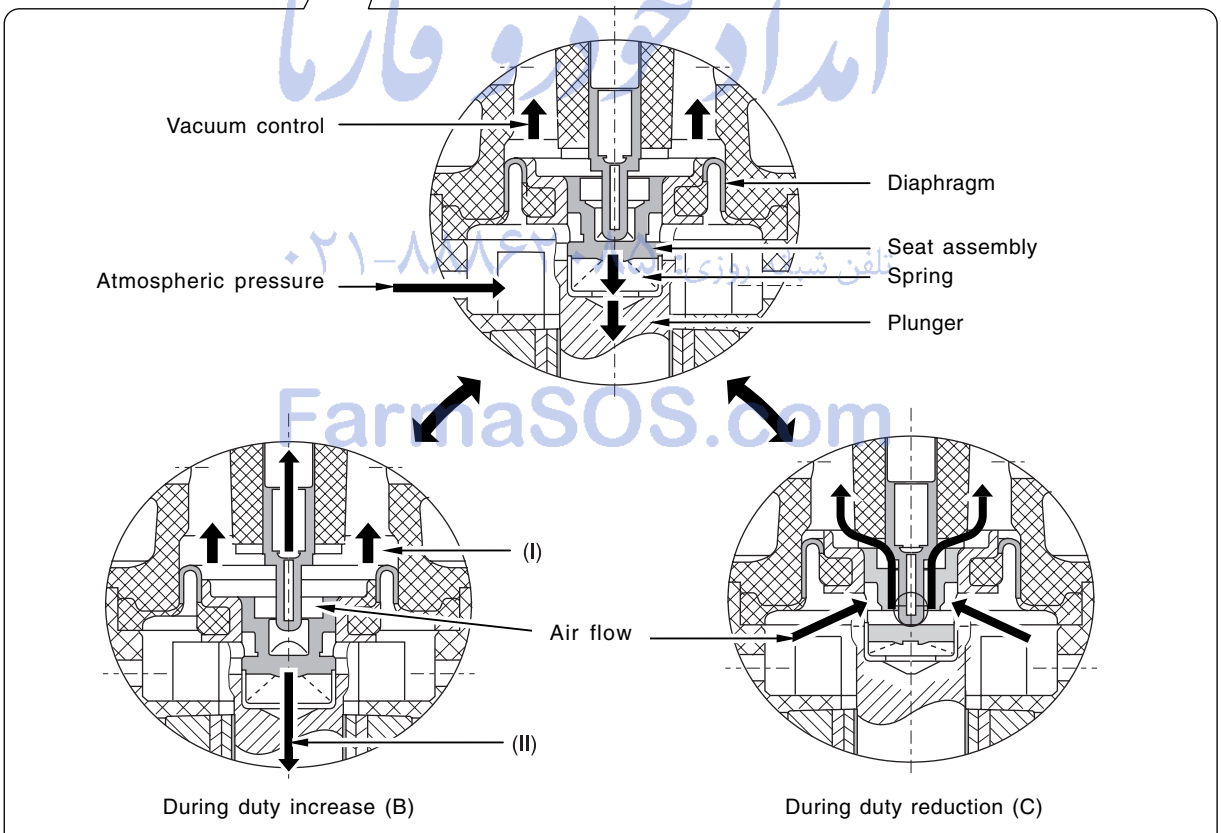

Vacuum is controlled according to relationship between chamber pressure (I) in rolling nipple cover and magnetic force (II) in plunger.

Y220_04029

According to ECU signals, the solenoid valve controls the vacuum pressure that is generated by vacuum pump (-900 ± 20 mbar) with PWM type control and drives the mechanical EGR valve and turbo charger.

CHANGED BY	
EFFECTIVE DATE	
AFFECTED VIN	

Operating principle: Balance between original vacuum pressure and magnetic force (see above figure)

- Normal state (Fig. A): Original vacuum and seat section, 3 stoppers keep sealing
- Duty up state (Fig. B): Original vacuum pressure is connected to inside of diaphragm chamber
- Duty down state (Fig. C): Increased diaphragm chamber pressure is connected to atmosphere to compensate the pressure.

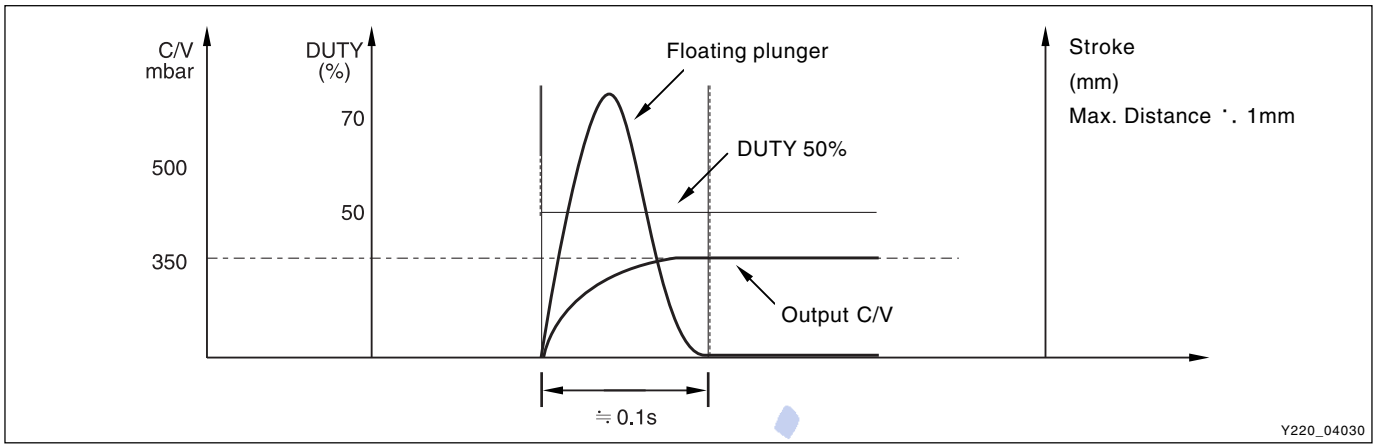

› Operating principles when duty is applied from 0 to 50 %

Vacuum consumption: Compared to 50 % of duty, ON/OFF periods are most unstable and vacuum consumption is most high.

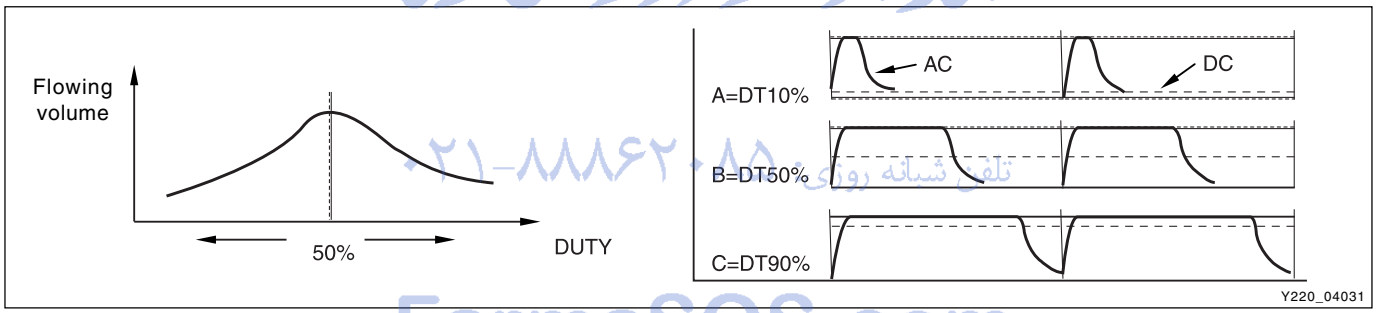

FarmaSOS.com

Output Characteristics

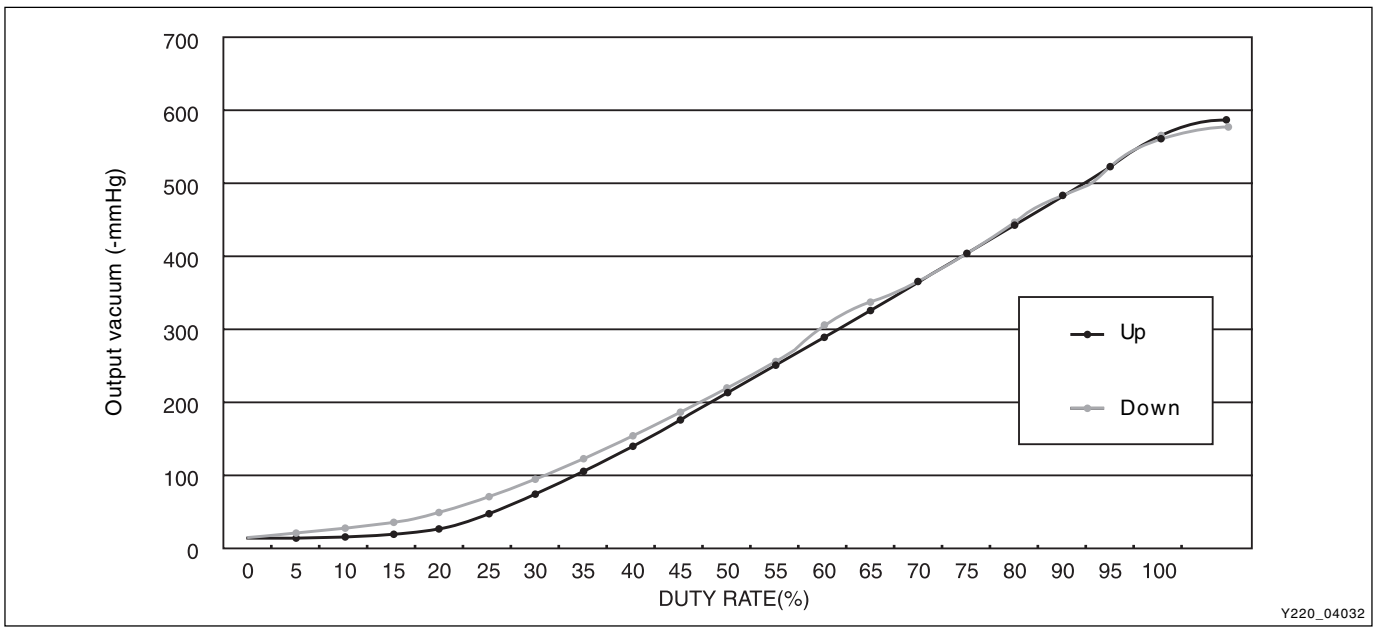

Operating Conditions

- Engine is running
- Engine RPM is within a specified range. (EGR OFF under high RPM range)
- Engine torque is within a specified range. (EGR OFF under high torque range)
- Vehicle speed is within a specified range. (EGR OFF under high speed range)
- Atmospheric pressure is within a specified range. (EGR OFF under high altitude and low atmospheric pressure)
- Coolant temperature is within a specified range. (EGR OFF under high or low temperature)
- EGR OFF under extended period of idling.

Control Logic

- Main map: EGR volume is controlled based on intake air volume
- Auxiliary map
  - Coolant temperature (Coolant temperature sensor)
  - Engine rpm (Crankshaft position sensor)
  - Engine load (TPS): Detection of sharp acceleration
  - Intake air temperature (HFM): Decreases when over 60°C
  - Atmospheric pressure (Barometric sensor): Compensation of altitude
- Compensation value of auxiliary map will be increased/decreased based on main map then ECU calculates EGR volume finally to regulate the vacuum duty that applies to the vacuum modulator to control EGR valve openings.

Shut-off Conditions

- Engine rpm: over 2,950 rpm
- Vehicle speed: over 105 km/h
- Coolant temperature: over 100°C or below 10°C
- Idle period: over 50 seconds

امداد خودرو فارس
تلفن شبانه روزی: ۰۸۵-۸۸۸۶۲۰۸۵-۲۱
FarmaSOS.com

CHANGED BY	
EFFECTIVE DATE	
AFFECTED VIN	

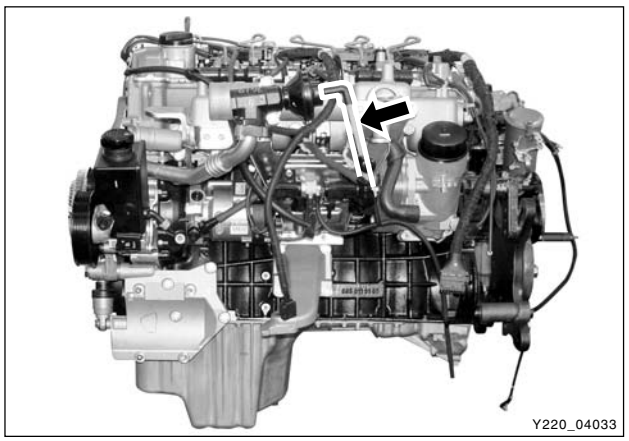

EGR Valve and Pipe - Removal and Installation

1. Remove the vacuum hose from the EGR valve.

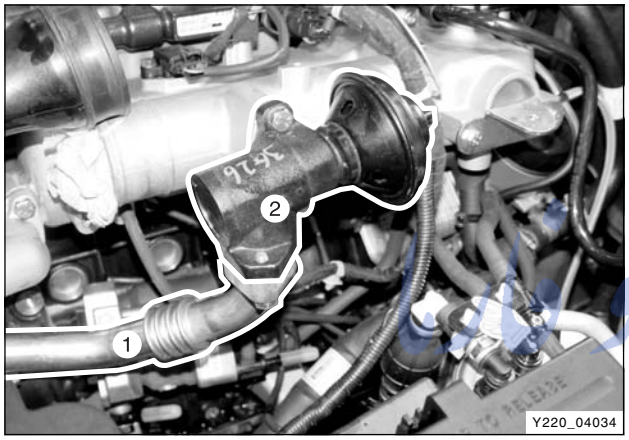

2. Unscrew the bolts and remove the EGR valve (2), EGR valve #1 pipe (1) and gasket.

Tightening torque	25 ± 2.5 Nm

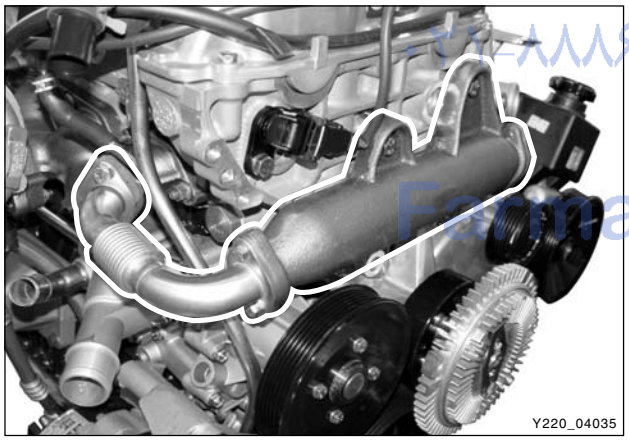

3. Remove the EGR valve #1 pipe, #2 pipe, #3 pipe and gaskets from the engine.

Tightening torque	25 ± 2.5 Nm

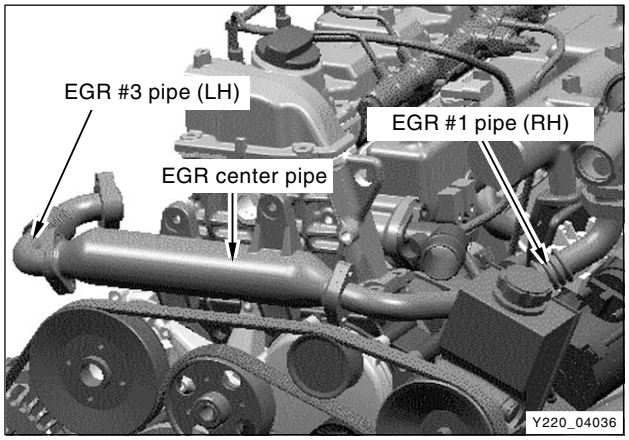

4. Install in the reverse order of removal.

Notice

- ***Make sure to observe the specified tightening torques.***
- ***Never reuse the EGR #1 pipe (intake) and #3 pipe (exhaust) once removed.***
- ***Replace the gaskets with new ones.***

FarmaSOS.com

Vacuum Modulator - Removal and Installation

1. Remove the vacuum hose from the vacuum modulator.

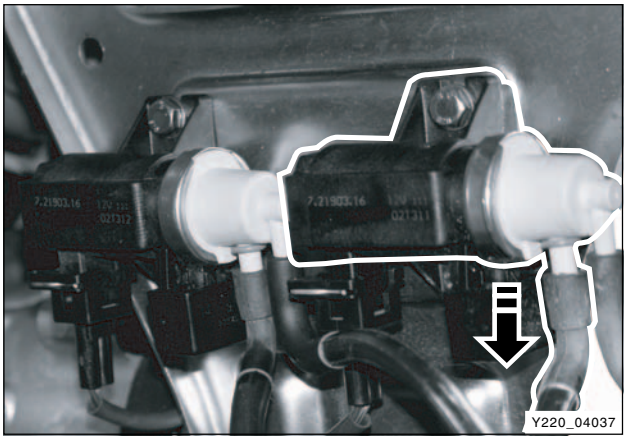

2. Remove the vacuum modulator from the bracket.

Tightening torque	10 ± 1.0 Nm

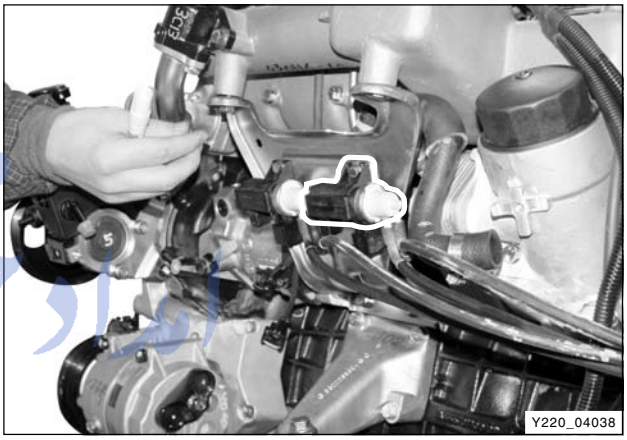

3. Install in the reverse order of removal.

Notice

Make sure that the vacuum hoses are connected to correct locations.

امداد خودرو فارما
تلفن شبانه روزی: ۰۲۱-۸۸۸۶۲۰۸۵
FarmaSOS.com

CHANGED BY	
EFFECTIVE DATE	
AFFECTED VIN	

EXHAUST SYSTEM AND MUFFLER

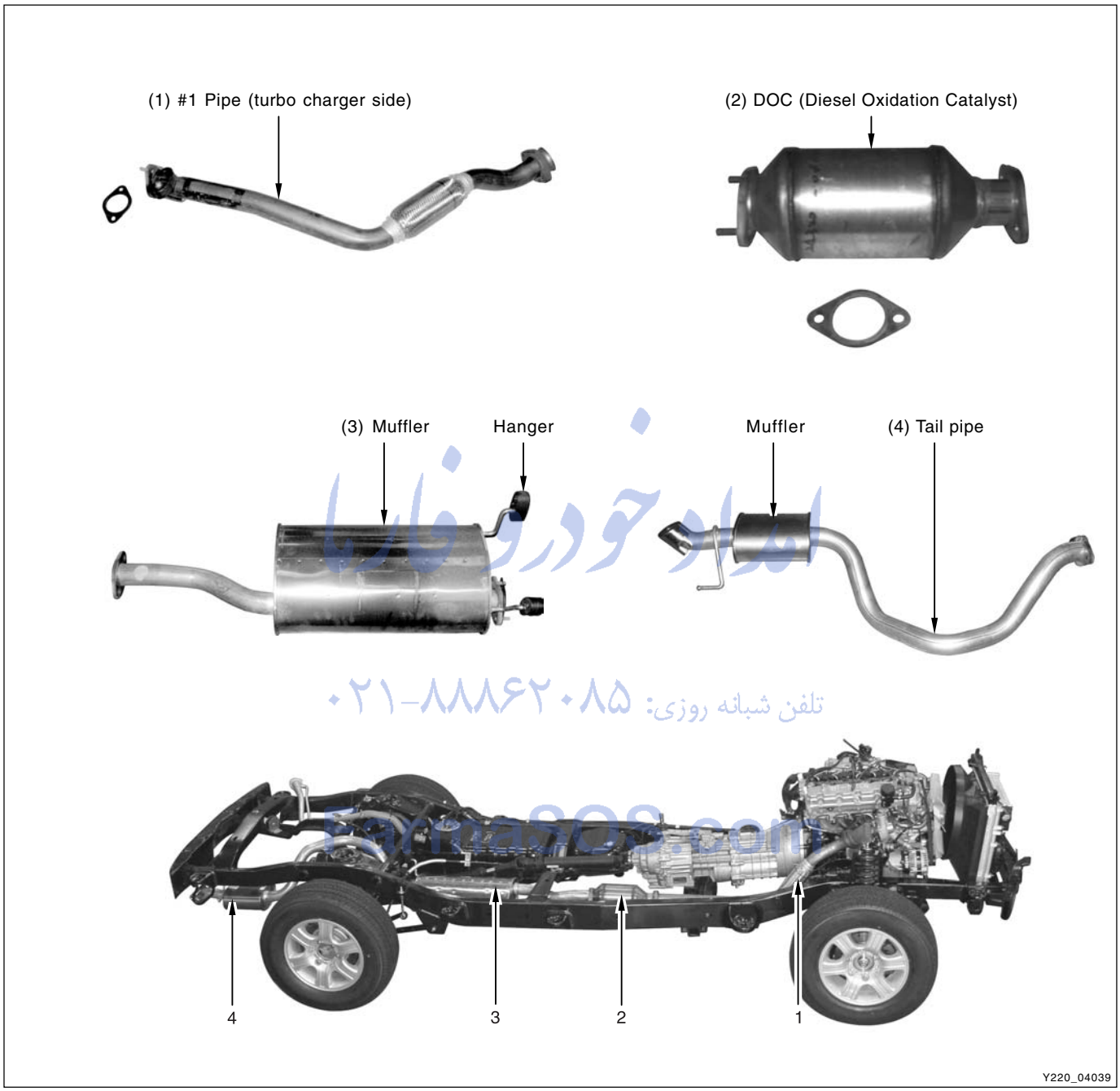

امداد خودرو فارس
تلفن شبانه روزی: ۰۲۱-۸۸۸۶۲۰۸۵
FarasSOS.com

MUFFLER

The muffler is located at the middle of the exhaust pipe and reduces the pulse noise and the tail pipe noise by eliminating the flowing resistance from the exhaust gas.

The important elements of the muffler are volume, construction and location.

SYSTEM OVERVIEW

▶ Exhaust System

Check the complete exhaust system and the nearby body areas and trunk lid for broken, damaged, missing or mispositioned parts, open seams, holes, loose connections, or other deterioration which could permit exhaust fumes to seep into the trunk may be an indication of a problem in one of these areas. Any defects should be corrected immediately.

Notice

When you are inspecting or replacing exhaust system components, make sure there is adequate clearance from all points on the underbody to avoid possible overheating of the floor panel and possible damage to the passenger compartment insulation and trim materials.

▶ DOC (Diesel Oxidation Catalyst)

DOC (Diesel Oxidation Catalyst) is the purification device to reduce the toxic emissions from the exhaust gas from the engine. By using the chemical reaction, the amount of toxic gas such as NOx can be reduced.

Notice

To prevent damage of DOC, never contact the lift pad when lifting up the vehicle.

▶ Muffler

Aside from the exhaust manifold connection, the exhaust system uses a flange and seal joint design rather than a slip joint coupling design with clamp and U-bolts. If hole, open seams, or any deterioration is discovered upon inspection of the front muffler and pipe assembly, the complete assembly should be replace, the complete assembly should be replaced. The same procedure is applicable to the rear muffler assembly. Heat shields for the front and rear muffler assembly and catalytic converter protect the vehicle and the environment from the high temperatures that the exhaust system develops.

▶ Heat Shield

The heat shield protects the vehicle and components from the high heat generated from the exhaust system.

In this vehicle, the heat shield to block the heat from DOC is installed to the underbody, and the heat shield to block the heat from the rear muffler is installed to the underbody between the fuel tank and the rear muffler.

▶ Hanger

The hanger is to support the components.

If the ganger is not properly installed, it may cause the vibration that is very difficult to diagnose. Therefore, install the hanger to the correct location so that the exhaust system cannot contact to the underbody and other components.

تلفن شبانه روزی: ۰۲۱-۸۸۸۶۲۰۸۵
FarmaSOS.com

CHANGED BY	
EFFECTIVE DATE	
AFFECTED VIN	

▶ DOC (Diesel Oxidation Catalyst)

System and principle

Oxidation catalytic technology for diesel engine is basically the same with it of gasoline engine used before development of 3 primary catalyst (2 primary catalyst), and its effect and performance were already proved.

DOC (Diesel Oxidation Catalyst) reduces HO and CO contained exhaust gas over 80 %, and removes SOF (Soluble Organic Fraction) over 50 ~ 80 %, but because its portion in total PM is low, it reduces approx, 20 ~ 40 % of TPM (Total Particulate Material).

Because of low reducing rate for PM of DOC, in order to guarantee safety rate of PM regulation, this technology is being used mainly. And it should keep over 80% of PM reducing rate, and at present it plays a role as a transition stage.

And also it reduces diesel odor and black smoke, platinum or palladium are being used as a catalyst.

On the other hand, it is a problem that it makes the reaction of oxidation, which SO_2 produce SO_3 and H_2 SO_4 by reacting to oxygen in exhaust gas, if temperature of exhaust gas becomes over 300°C, and this produced gas is very harmful to human body. To prevent is, previously it is requested that the sulfur content rate of fuel should be below 0.05 %, and in the future it is being expected to keep it below 0.01 %.

Catalytic converter structure

The Catalytic converter of monolith type consists of 2 walled metal bodies which is made of Cordierite.

The principal element of converter consists of the materials like Alumina or oxidized Serume in order to apply to Ceramic Monolith. Washer coat operates first, and catalytic metal elements (Pt, Pd, Ph) operates to washer coat next.

Monolith type is lighter than other types, easy to manufacture and quickly approaches to proper temperature.

Washer coat is used to make a contact surface with exhaust gas bigger by adhering closely to small holes of inner layer.

If a lead compound or phosphorus adheres to the surface and the temperature rises, its surface is decreased.

The total area of general monolith converter is about 45,000 ~ 500,000 ft^3. (10 times of a football field)

Generally Alumina (AL_2O^3) is used as a raw material and its 7 phases of gamma, delta, theta have big areas and high stability for the temperature, and nowadays gamma Alumina is used usually.

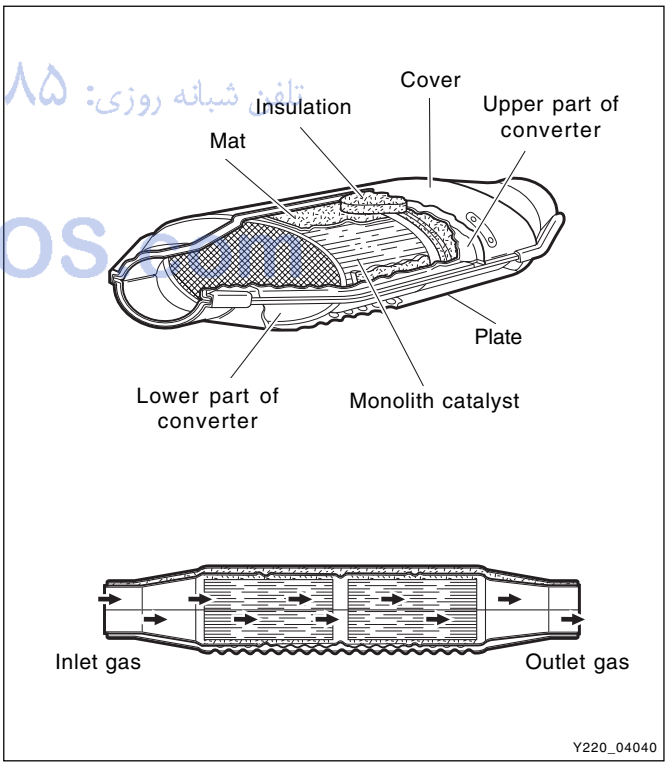

تلفن شبانه روزی: ۰۲۱-۸۸۸۶۲۰۸۵
FarmaSOS.com

Catalytic converter and temperature

Catalytic converter has the normal function of purification at a range of the temperature. Because it has a weak point of decreasing of the purification rate in the condition of continuous high temperature, it should keep the temperature range of 400 to 500°C for normal condition. HC purification rate becomes better according to the increase of temperature in the normal range of temperature. CO purification rate becomes the best near the temperature of 450°C, and NOx does so near the temperature of 400 to 500°C.

Purification of catalytic converter

- Adhesion of soluble organic fraction (SOF) below 180°C
- Purification of soluble organic fraction (SOF) over 180°C

Chemical reaction formula

- SOF(HC) + O2 ..... O2 + H2O
- 2CO + O2 ..... 2CO2
- 2C2H6 + 7O2 ..... 4CO2 + 6H2O

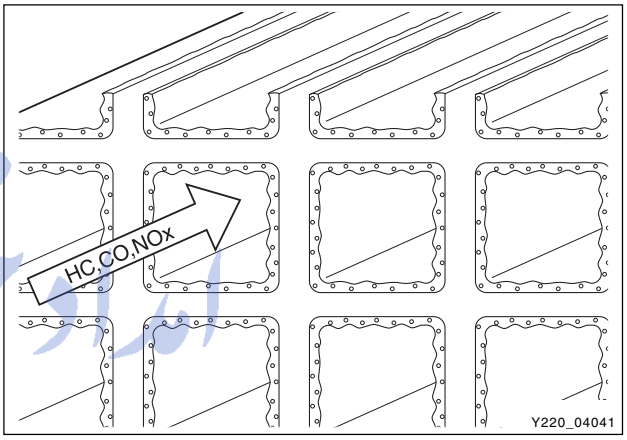

امداد خودرو فارنا
تلفن شبانه روزی: ۰۲۱-۸۸۸۶۲۰۸۵
FarmaSOS.com

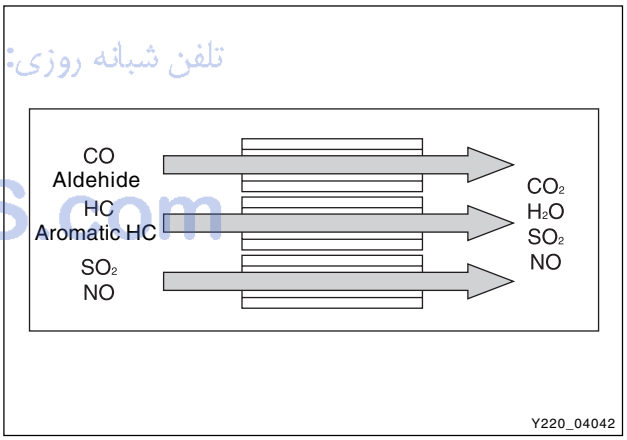

- Oxygen adheres to catalytic material : below 180°C

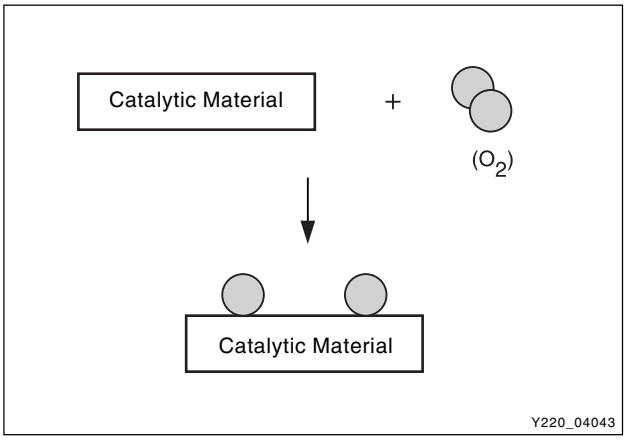

CHANGED BY	
EFFECTIVE DATE	
AFFECTED VIN	

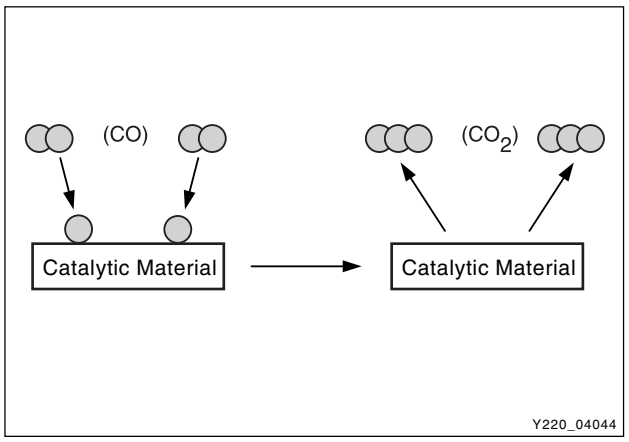

- Catalytic material supplies each CO and HC with O2 for their oxidation : above 180°C

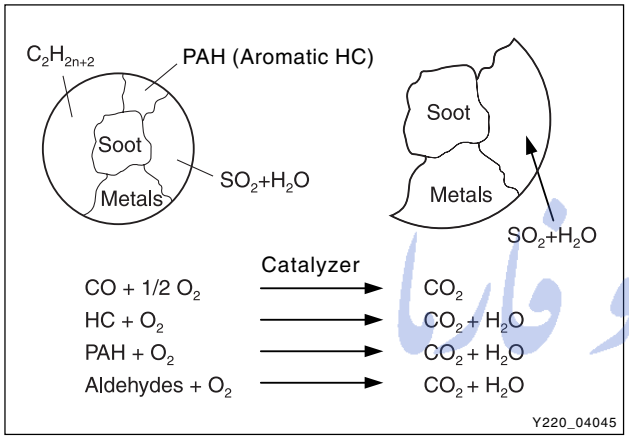

- Catalytic material conversion process by DOC

امداد خودرو فارما
۰۲۱-۸۸۴۶۲۰۸۵
FarmaSOS.com

Method for reduction of NOx

NOx is generated a great deal in case that combustion temperature and excess air factor are high. EGR valve can decrease NOx (30 to 35 % decrease) by making temperature of combustion chamber fall by means of exhaust gas recirculation.

#1 Exhaust Pipe - Removal and Installation

1. Remove the upper bolts at turbo charger.

Notice

Use the universal type wrench.

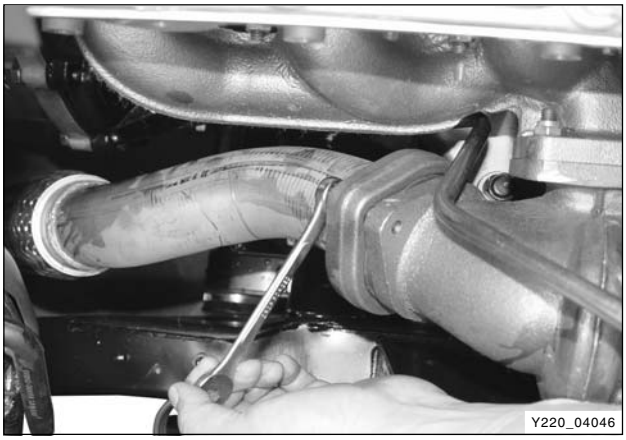

2. Remove the lower bolts and gasket.

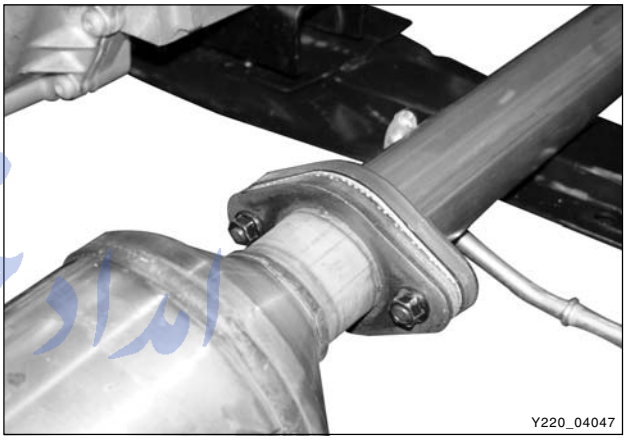

3. Remove the pipe mounting rubber.

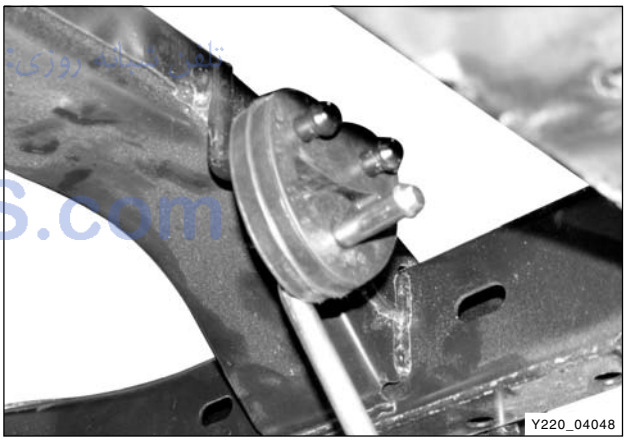

4. Remove the #1 exhaust pipe.
5. Install in the reverse order of removal.

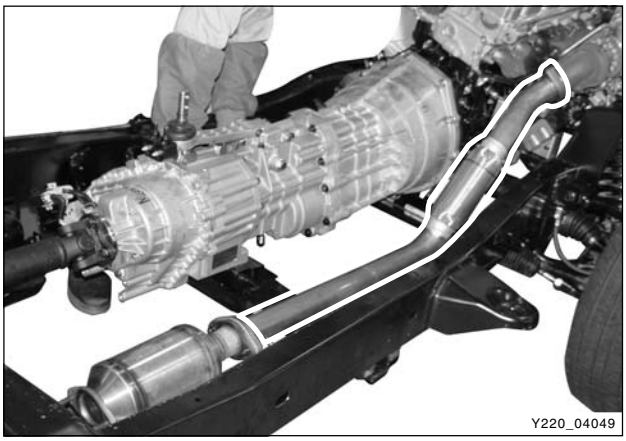

امداد خودرو فارما
۰۲۱-۸۸۸۶۲۰۸۵
FarmaSOS.com

CHANGED BY	
EFFECTIVE DATE	
AFFECTED VIN	

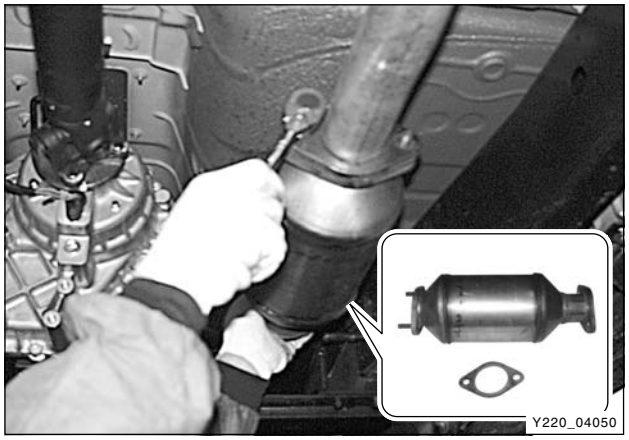

Catalytic Converter - Removal and Installation

1. Unscrew the bolts at both sides and remove the gasket and the converter.
2. Install in the reverse order of removal.



#2 Exhaust Pipe - Removal and Installation

1. Unscrew the bolts and remove the gasket.

امداد خودرو ایرانیان
تلفن شبانه روزی: ۰۲۱-۸۸۸۶۲۰۸۵
FarmaSOS.com

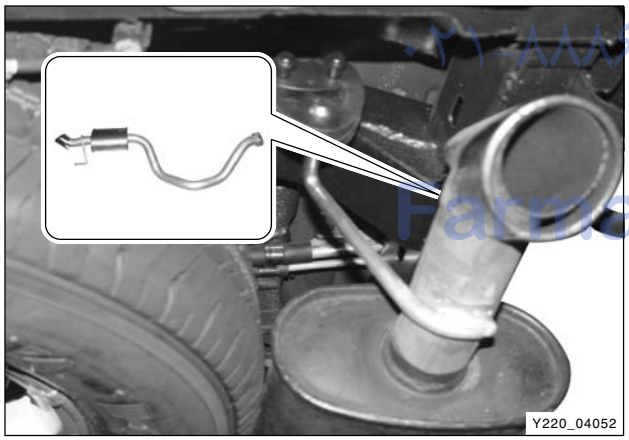

2. Release the rear mounting lever with a screwdriver.

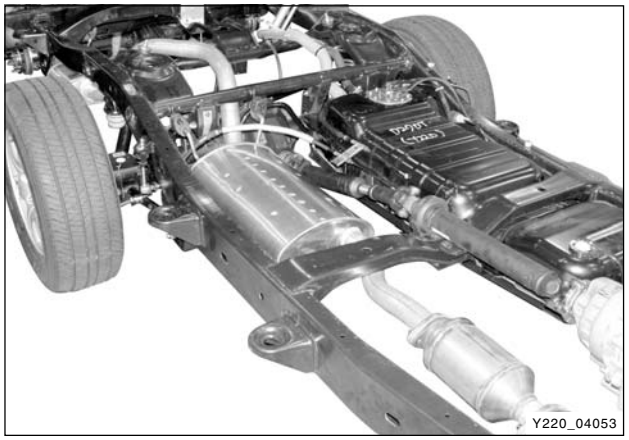

3. Remove the #2 exhaust pipe.

4. Install in the reverse order of removal.

SECTION DI05

LUBRICATION SYSTEM

امداد خودرو فارما

تلفن شبانه روزی: ۰۲۱-۸۸۸۶۲۰۸۵

FarmaSOS.com

SECTION DI05

LUBRICATION SYSTEM

Table of Contents

LUBRICATION SYSTEM DI05-3

Lubrication system layout DI05-4
Lubrication diagram DI05-5
Specifications DI05-6
Engine oil change DI05-10
Oil pump DI05-14
Oil spray nozzle DI05-16
Oil pan assembly DI05-17

TROUBLE DIAGNOSIS DI05-18

SPECIAL TOOLS AND EQUIPMENT DI05-19

امداد خودرو فارما
۰۲۱-۸۸۸۶۰۷۸۵ تلفن شبانه روزی
FarmaSOS.com

CHANGED BY	
EFFECTIVE DATE	
AFFECTED VIN	

امداد خودرو فارما

تلفن شبانه روزی: ۸۸۸۶۲۰۸۵-۰۲۱

FarmaSOS.com

LUBRICATION SYSTEM

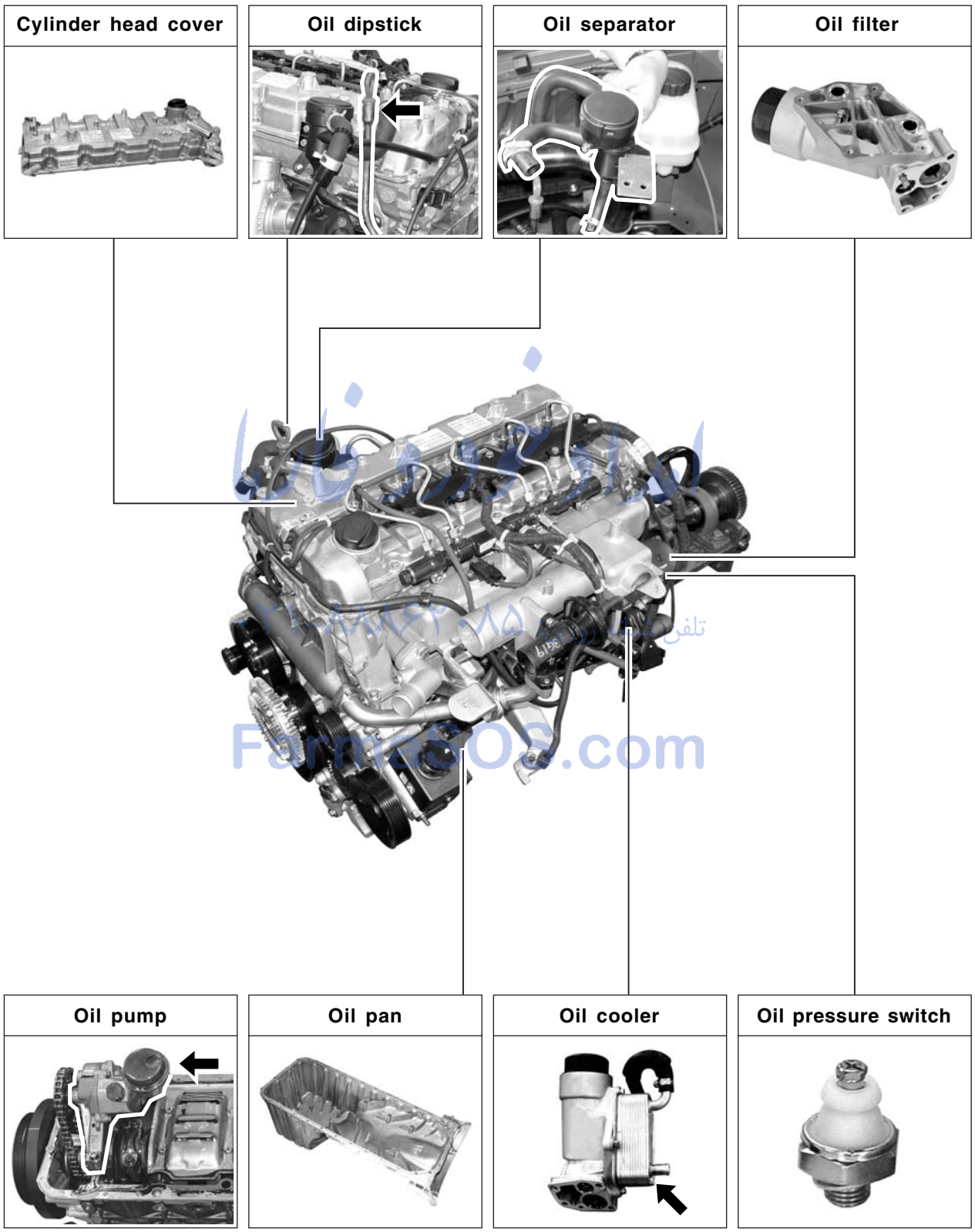

CHANGED BY	
EFFECTIVE DATE	
AFFECTED VIN	

LUBRICATION SYSTEM LAYOUT

Main oil gallery: ϕ 16
Hole to cylinder head: ϕ 9
Main bearing hole: ϕ 7
Chain and injection pump: ϕ 7
Return hole: ϕ 14
Chain nozzle: ϕ 1
HP pump bearing: ϕ 6

Cylinder head

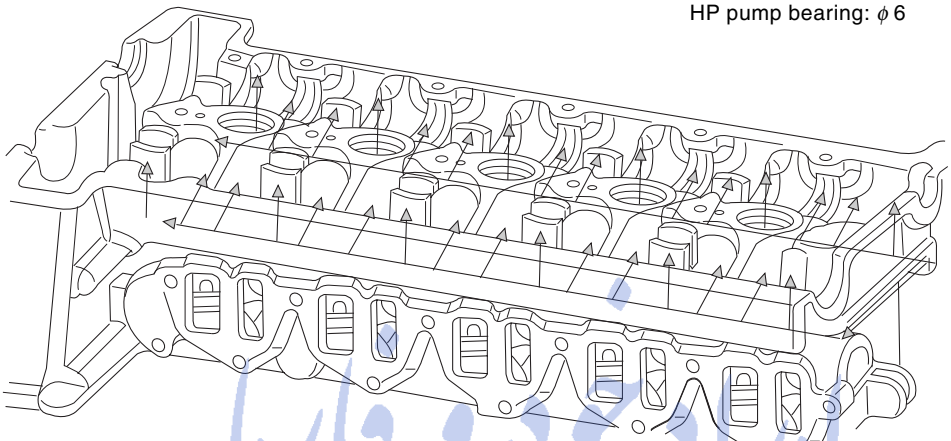

Cylinder block

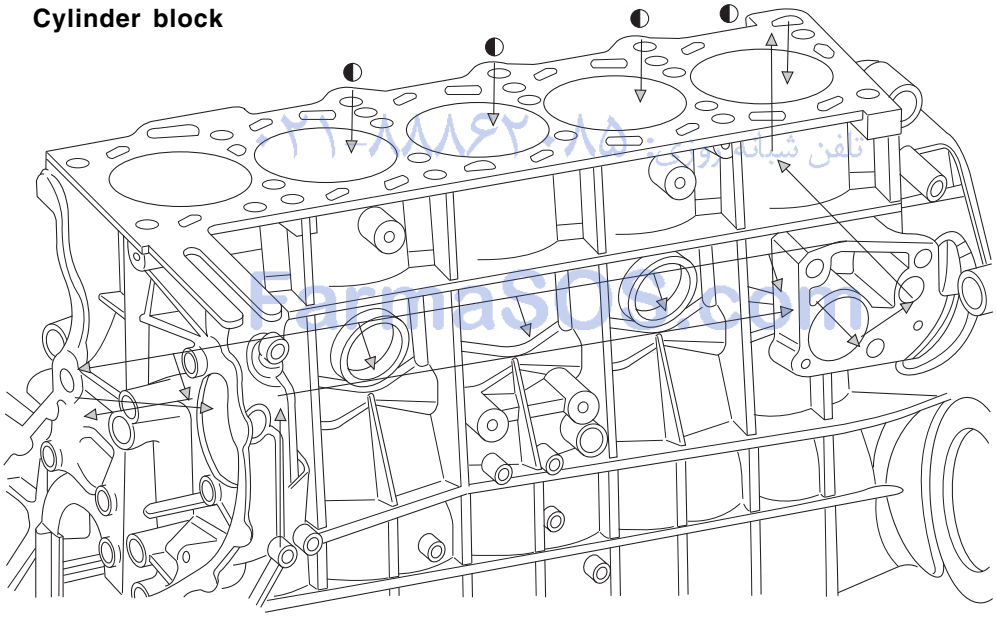

Y220_05002

امداد خودرو فارما
تلفن شبانه روزی: ۰۲۱-۸۸۸۶۲۰۸۵
FarmaSOS.com

LUBRICATION DIAGRAM

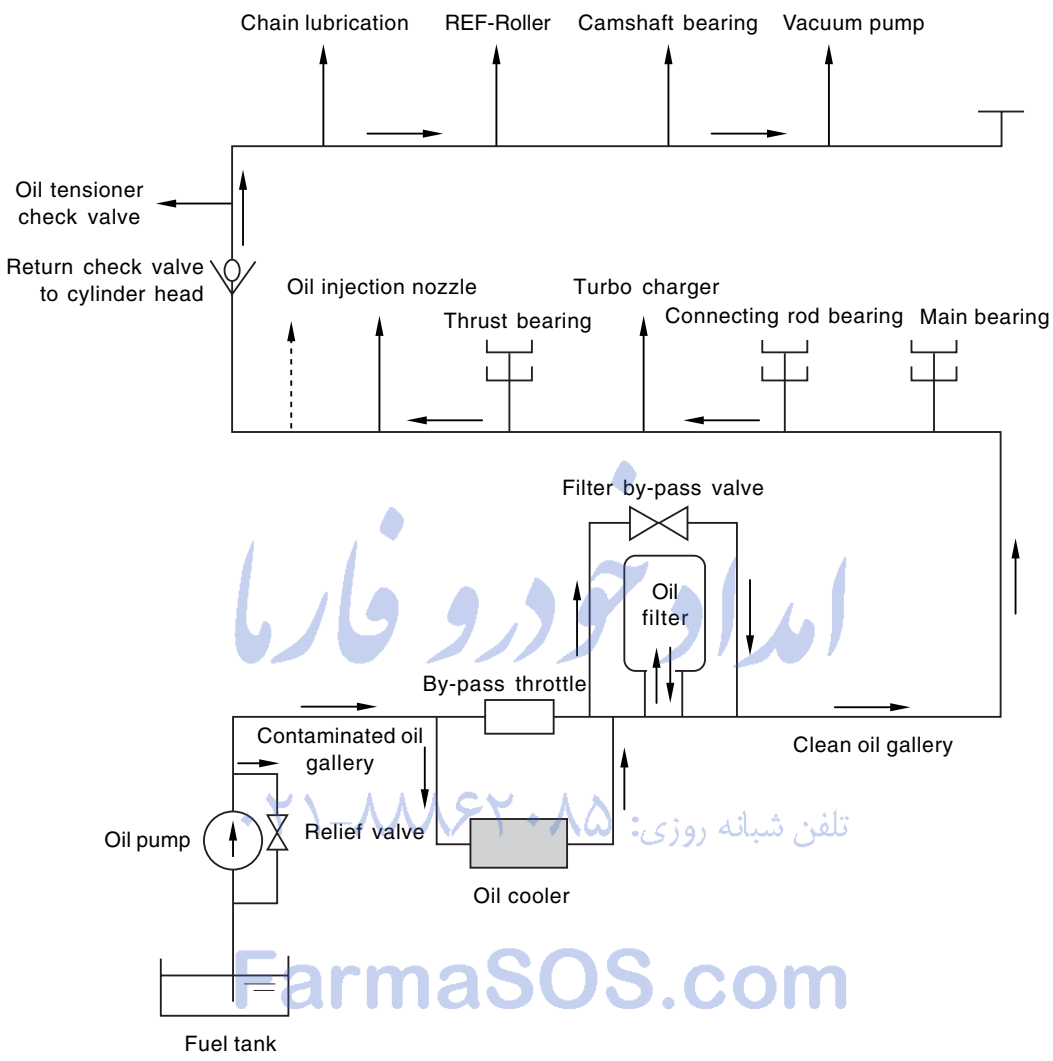

امداد خودرو فارما
تلفن شبانه روزی: ۰۲۱-۸۸۴۶۲۰۸۵
FarmaSOS.com

※ 1. Opening pressure of by-pass valve in oil filter: 3 ± 0.4 bar

2. To prevent instant oil shortage after stopping the engine, the return check valve is installed in oil supply line of cylinder head.

CHANGED BY	
EFFECTIVE DATE	
AFFECTED VIN	

SPECIFICATIONS

Engine oil	Specification	Approved by MB Sheet 229.1 or 229.3 Viscosity: See MB Sheet 224.1
	Capacity	6.8 ~ 8.3 liter
	Service interval	Initial change: 5,000 km, Change every 10,000 km or 12 months (Frequently check the oil level and add if needed. And, every 5,000 km or 6 months under severe conditions)
Engine oil filter		Same interval with engine oil
Oil relief valve opening pressure		5.8 ± 0.3 bar

※ **Severe condition:**

- When most trips include extended idling and/or frequent low-speed operation as in stop-and-go traffic.
- When most trips are less than 6 km (Operating when outside temperatures remain below freezing and when most trips are less than 16 km)
- When operating in dusty, sandy and salty areas
- In hilly or moutainous terrain
- When doing frequent trailer towing

امداد خودرو فارما
۰۲۱-۸۸۸۶۲۰۸۵ تلفن شبانه روزی:
FarmaSOS.com

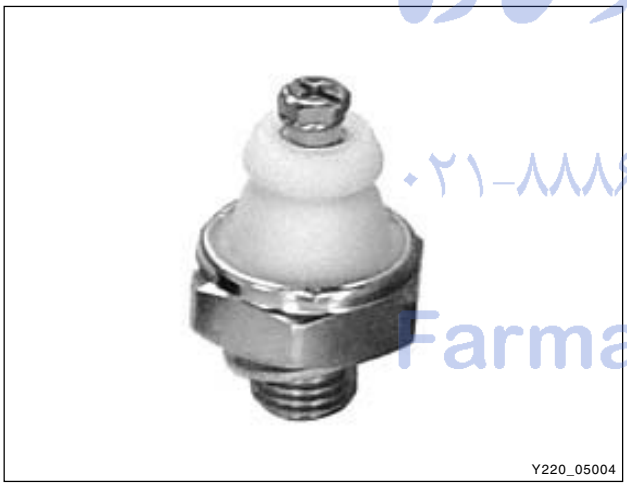

▶ Oil Pressure Switch

- Operating temperature: -40 ~ 140°C
- Operating pressure: 0.3 ~ 0.55 bar
- Permissible pressure: 10 bar

▶ Oil Pump

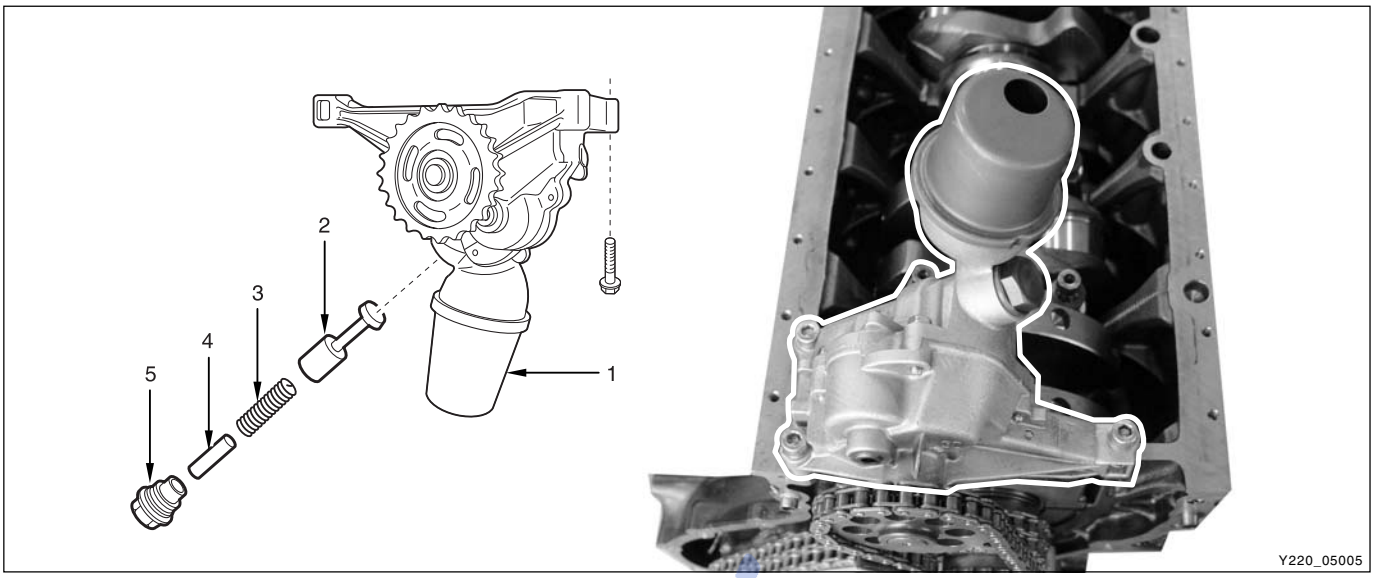

Engine	Oil	Relief Valve Opening Pressure
D27DT	MB SHEET 229.1/3 SAE 10W 40, 5W 40	5.8 ± 0.3 bar

※ Differences between D27DT and old model (D29ST)

- Enlarged pump capacity: Width of tooth (pump gear): 33 mm (D29ST: 30 mm)
- Increased number of teeth (sprocket): 26 (D29ST: 24)

امداد خودرو فارما
تلفن شبانه روزی: ۰۲۱-۸۸۸۶۲۰۸۵
FarmaSOS.com

▶ Oil Cooler

- Oil cooler mounting bolt: M6 x 16: 4

Tightening torque	10 Nm

- Replace two oil cooler gaskets with new ones when the oil cooler has been removed.

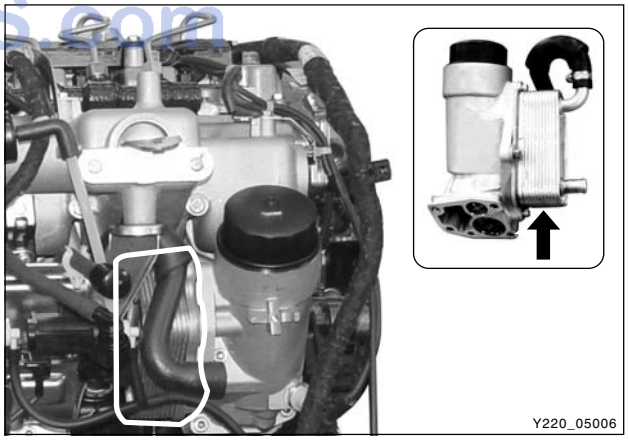

CHANGED BY	
EFFECTIVE DATE	
AFFECTED VIN	

▶ Blow-by Gas Reduction Device

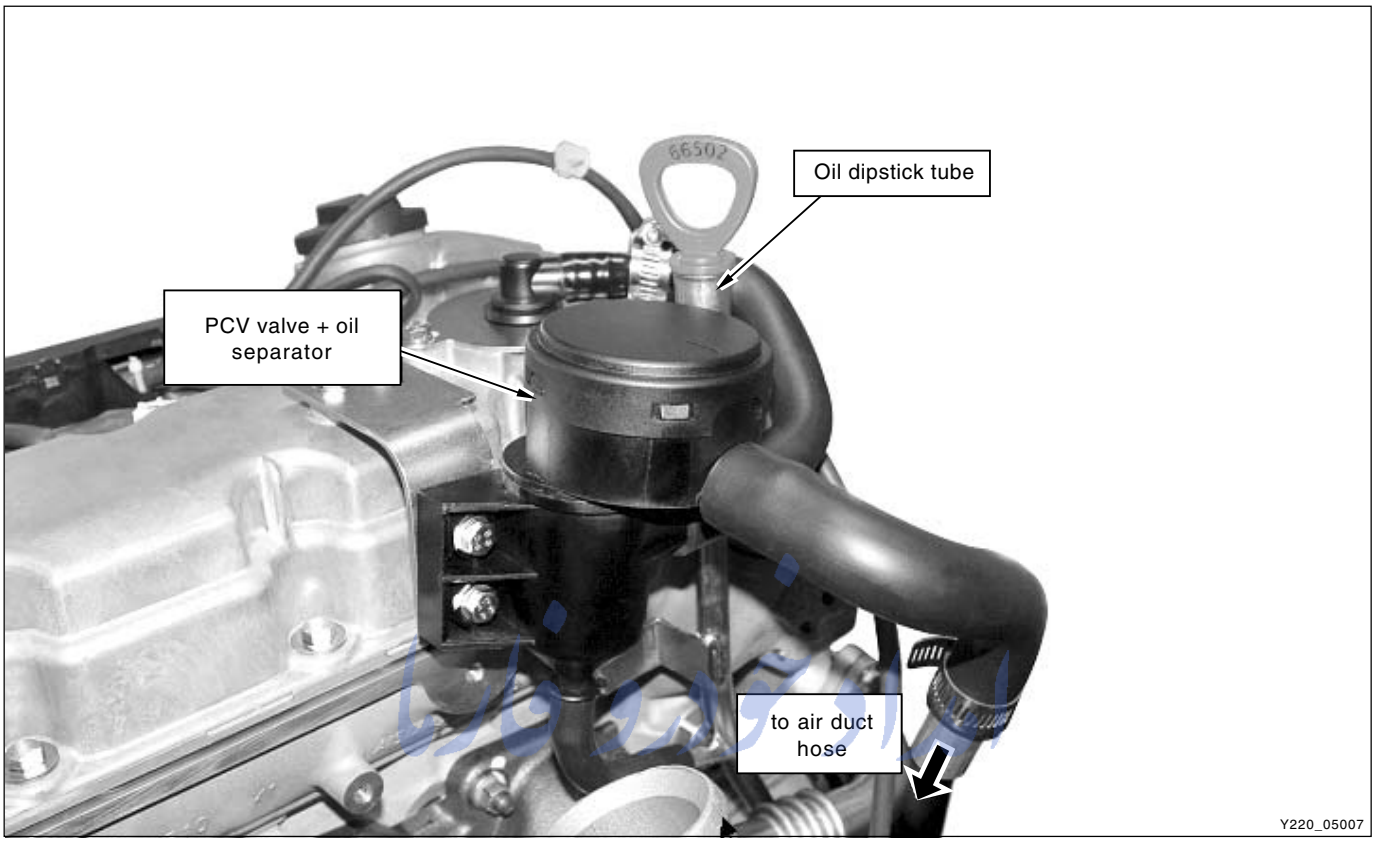

ایران خودرو دیزل
تلفن شبانه روزی: ۰۲۱-۸۸۸۶۲۰۸۵

▶ Cylinder Head Cover

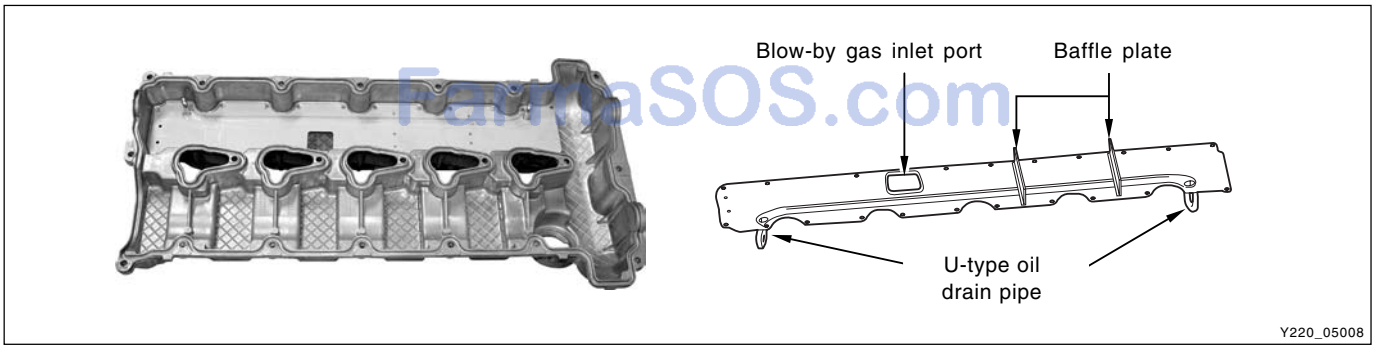

FarmaSOS.com

Baffle plate assembly: The baffle plates in cylinder head cover separates oil and gas from blow-by gas, and controls the blow-by gas speed to send only gas to separator.

▶ Oil Separator

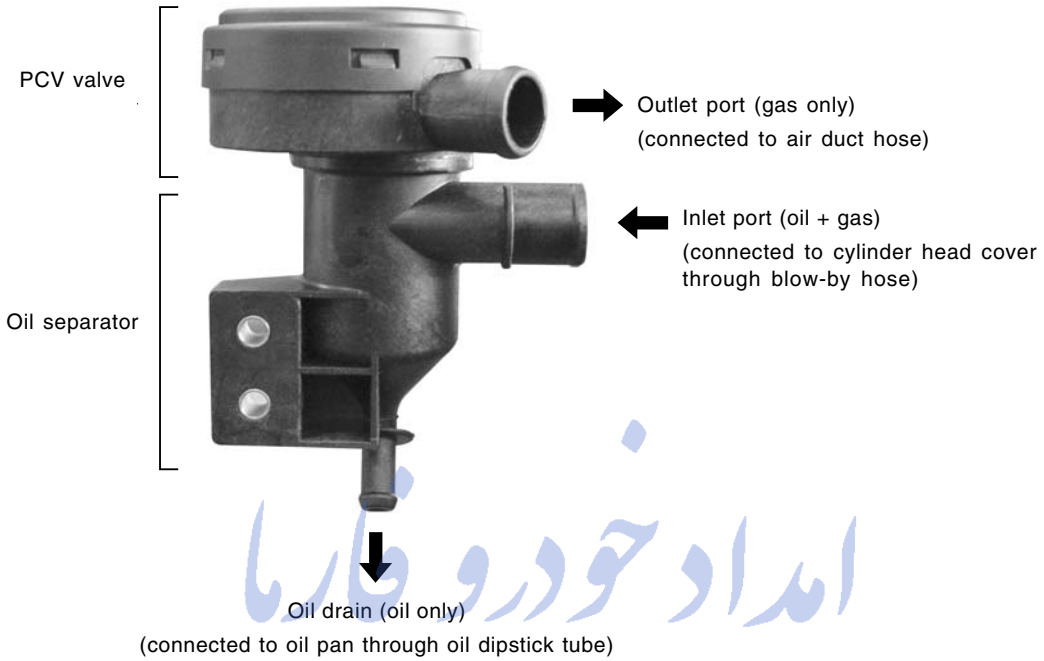

امداد خودرو فارما
تلفن شبانه روزی: ۰۲۱-۸۸۸۶۲۰۸۵
FarmaSOS.com

The first separation will happen when blow-by gas passes through baffle plates in cylinder head cover; then oil and gas will be separated due to cyclone effect after entering the oil separator inlet port. Separated oil returns to oil pan via oil drain port and the gas will be burnt again after entering the combustion chamber through air duct hose via PCV valve that opens/closes due to pressure differences between the intake side and crankcase.

▶ Engine Oil Pressure Check

Check the oil level and quality before checking the oil pressure.

1. Drain the engine oil.
2. Disconnect the oil pressure switch connector and remove the switch.
3. Install the oil pressure gauge into the switch hole. Start the engine and let it run until the coolant temperature reaches at normal operating temperature (80 ~ 90°C).
4. Raise the engine speed by 2000 rpm and measure the engine oil pressure.

Specified oil pressure	2.5 ~ 3.0 kg/cm²(2000 RPM)

5. Install the switch and engage the connector.

Notice

- ***Apply the Loctite onto the thread of the switch and check for oil leaks.***

Tightening torque	120 ~ 160 kg/cm²

CHANGED BY	
EFFECTIVE DATE	
AFFECTED VIN	

ENGINE OIL CHANGE

Change interval: Initial change: 5,000 km, Change every 10,000 km or 12 months

Frequently check and add if needed. Shorten the change interval under severe conditions.

* Severe condition:

- When most trips include extended idling and/or frequent low-speed operation as in stop-and-go traffic.
- When most trips are less than 6 km (Operating when outside temperatures remain below freezing and when most trips are less than 16 km)
- When operating in dusty, sandy and salty areas
- In hilly or moutainous terrain
- When doing frequent trailer towing

Notice

Water separation from the fuel filter should be performed when changing the engine oil.

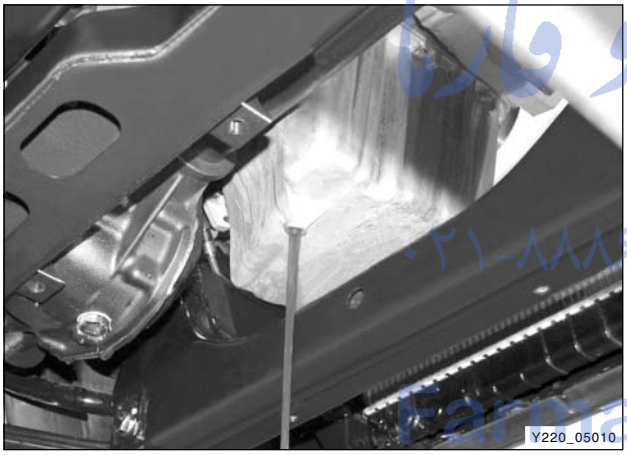

▶ Engine Oil Changing Procedures

1. Park the vehicle on the level ground and warm up the engine until it reaches normal operating temperature.
2. Stop the engine and wait around 5 minutes. Remove the oil filler cap, oil filter and oil drain plug to drain the oil.

Notice

After driving, the engine oil temperature may be high enough to burn you. Wait until the oil is cooled down.

3. Install new oil filter and tighten the drain plug with specified tighten torque.

Oil drain plug	25 ± 2.5 Nm

Notice

- ***Over-tightening may cause oil leaks.***
- ***Replace the drain plug washer with new one.***

4. Fill the engine oil through the oil filler opening.

Notice

The oil should not go above the upper mark on the dipstick. This would lead, for example, to increased oil consumption, fouling of the spark plugs and excessive formation of carbon residue.

5. Close the oil filler cap and start the engine.
6. Stop the engine again and check the oil level. Add the engine oil if needed and check for the oil leaks.

ایران خودرو فارما ۰۲۱-۸۸۸۶۲۰۸۵ تلفن شبانه روزی FarmaSOS.com

Engine oil filter change

1. For changing procedures, refer to the “Lubrication System” section in this manual.
   - Lubricate the engine oil gasket with engine oil before installation.
   - Tighten it with the specified tightening torque.

Oil filter	25 ± 2.5 Nm

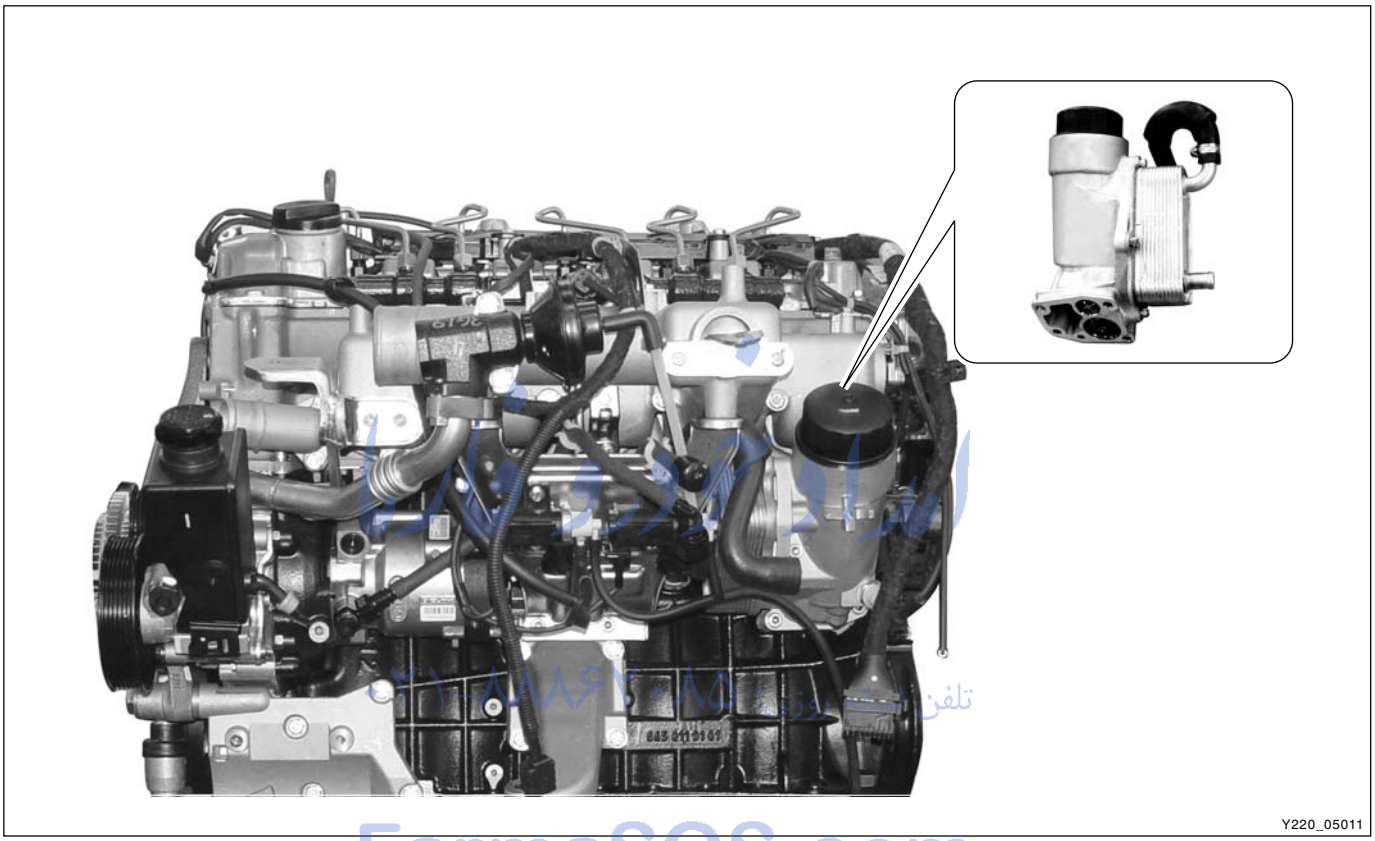

FarmaSOS.com

CHANGED BY	
EFFECTIVE DATE	
AFFECTED VIN	

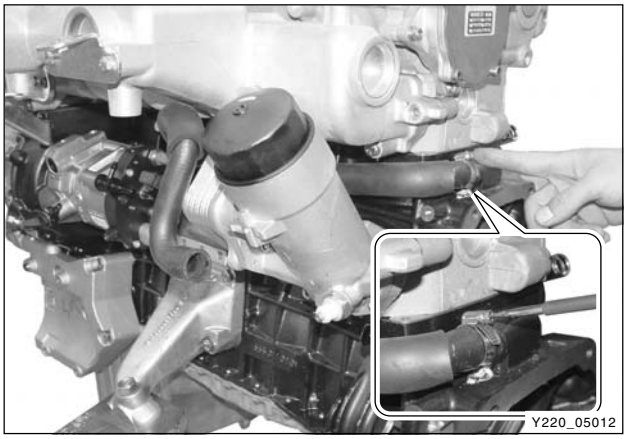

Oil Filter and Cooler - Removal and Installation

※ Preceding Works:

- Draining of engine oil
- Removal of EGR vacuum modulator bracket

1. Remove the oil cooler hoses (supply and return lines).

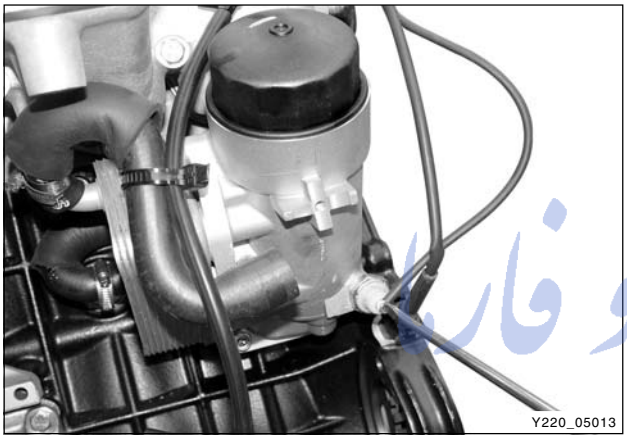

2. Disconnect the ground cable from the oil pressure switch.

امداد خودرو فارما
تلفن شبانه روزی: ۰۲۱-۸۸۸۶۲۰۸۵
FarmaSOS.com

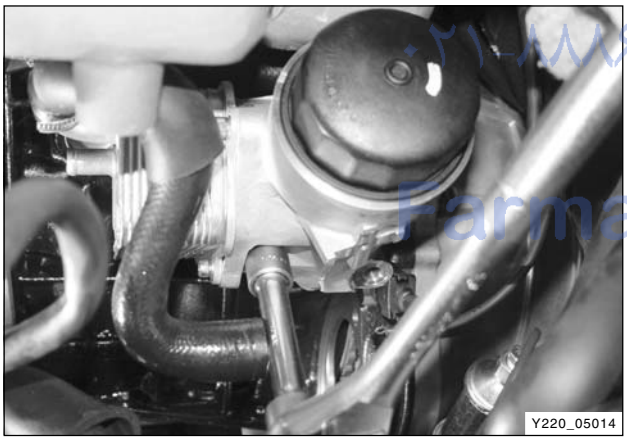

3. Remove the oil cooler and filter mounting bolt.

Notice

Pay attention to the length of bolts.

Tightening torque	23 ± 2.3 Nm

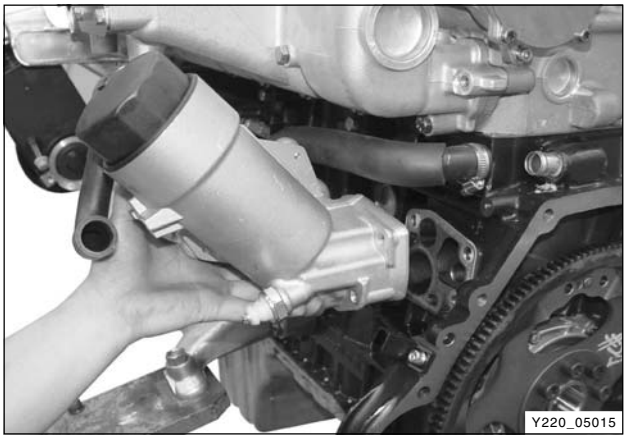

4. Remove the oil cooler and filter assembly from the cylinder block.

Notice

The oil cooler and filter assembly cannot be replaced separately.

5. Install in the reverse order of removal.

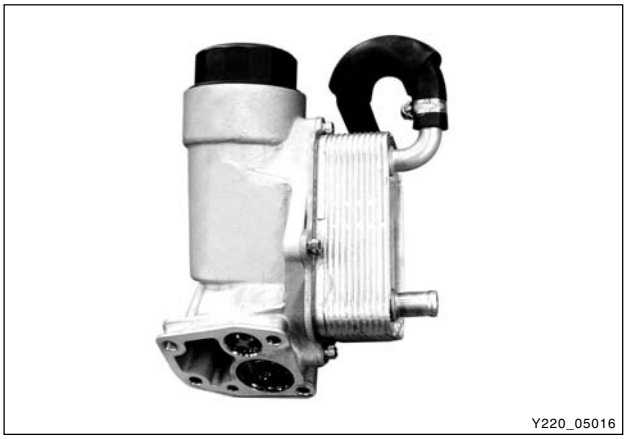

امداد خودرو فارما
تلفن شبانه روزی: ۰۲۱-۸۸۸۶۲۰۸۵
FarmaSOS.com

CHANGED BY	
EFFECTIVE DATE	
AFFECTED VIN	

OIL PUMP

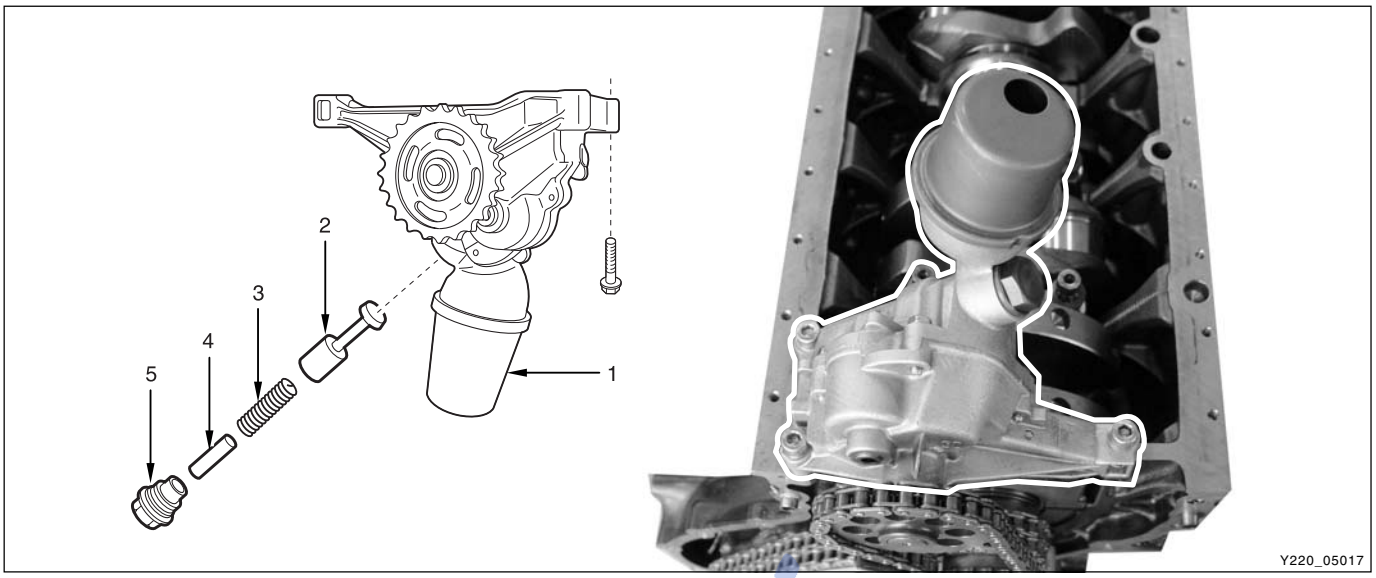

1. Oil pump
2. Plunger
3. Compression spring
4. Guide pin
5. Screw plug ..... 50 Nm
6. Combination bolt ..... 23 ± 2.3 Nm
7. Oil strainer

امداد خودرو فارما
FarmaSOS.com

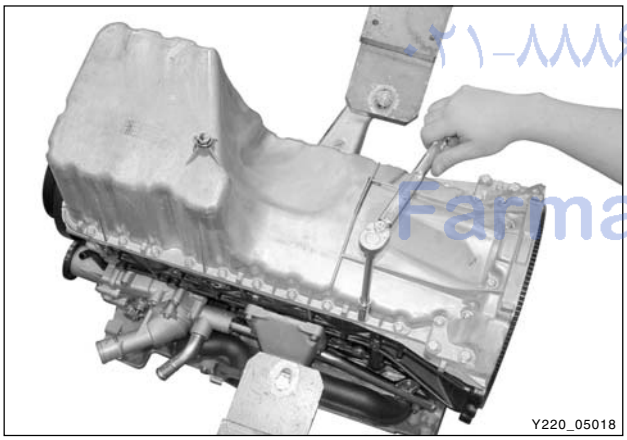

Oil Pump - Removal and Installation

1. Remove the oil pan.

Tightening torque	Nm
M6 x 20 (24 EA)	10 ± 1.0
M6 x 35 (2 EA)	10 ± 1.0
M6 x 85 (2 EA)	10 ± 1.0
M8 x 40 (4 EA)	25 ± 2.5

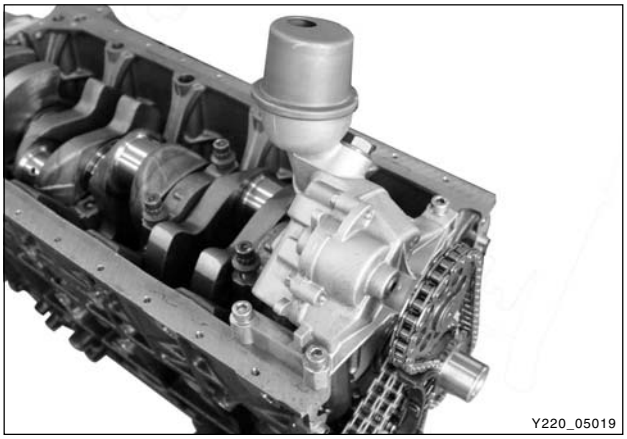

2. Remove the oil pump.
3. Remove the screw plugs and the relief valve.
4. Install in the reverse order of removal.
5. Start the engine and check for oil leaks.

Oil Dipstick Guide Tube - Removal and Installation

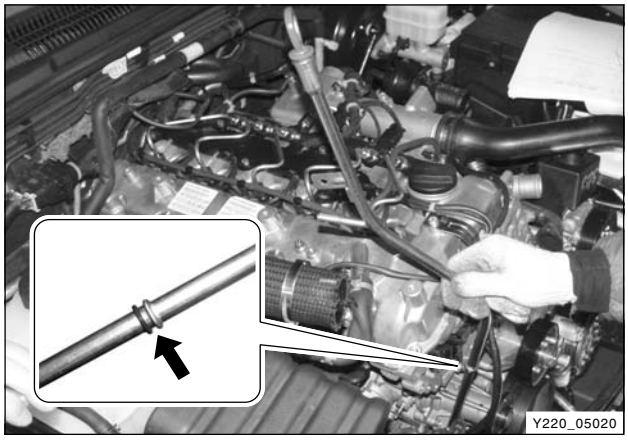

1. Pull out the engine oil dipstick.
2. Remove the EGR valve pipe (No.3).

Tightening torque	35 ± 3.5 Nm

Notice

Replace the pipe with new one.

3. Unscrew the bolt and remove the oil dipstick guide tube.

Notice

Replace the O-ring with new one.

4. Install in the reverse order of removal.

Tightening torque	10 Nm

Notice

After installation, check for oil leaks.

امداد خودرو فارما
تلفن شبانه روزی: ۰۲۱-۸۸۸۶۲۰۸۵
FarmaSOS.com

CHANGED BY	
EFFECTIVE DATE	
AFFECTED VIN	

OIL SPRAY NOZZLE

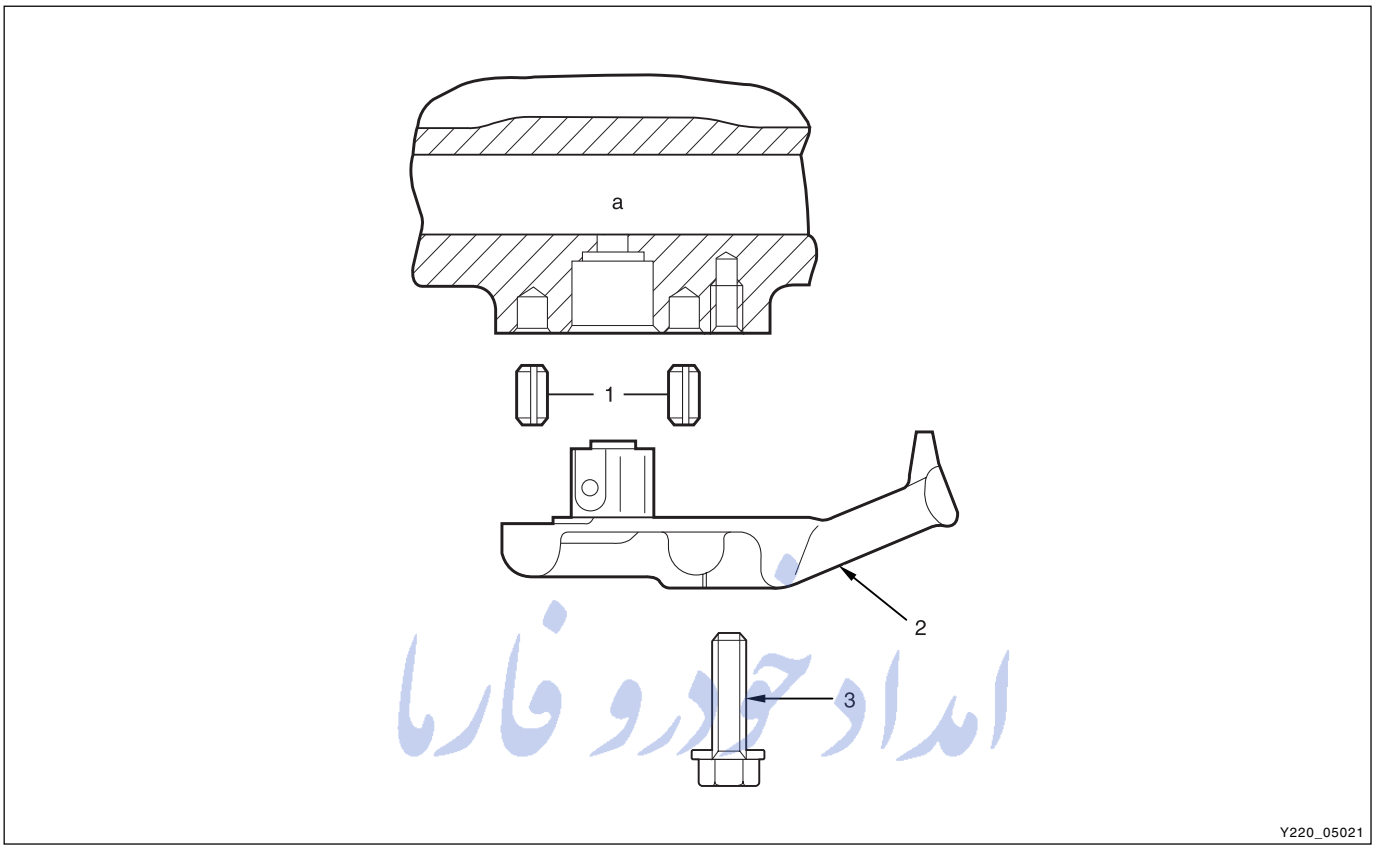

امداد خودرو فارما

1. Fitting sleeve
2. Oil spray nozzle
3. Combination bolt ..... 10 Nm
4. Oil duct

۰۲۱-۸۸۸۶۲۰۸۵ تلفن شبانه روزی
FarmaSOS.com

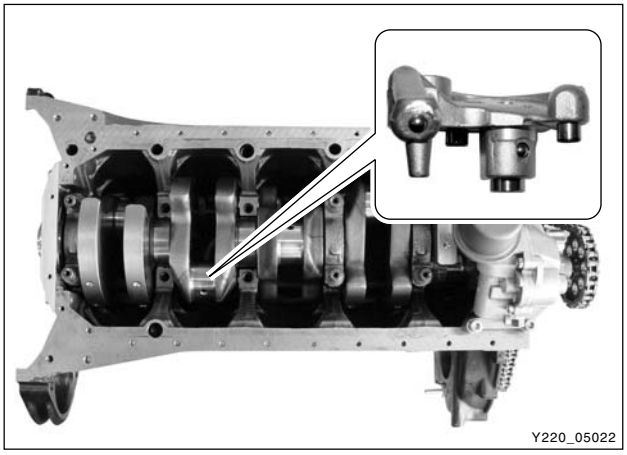

Disassembly

1. Remove the oil pan or crankshaft.
2. Unscrew the bolts and remove the nozzle.

OIL PAN ASSEMBLY

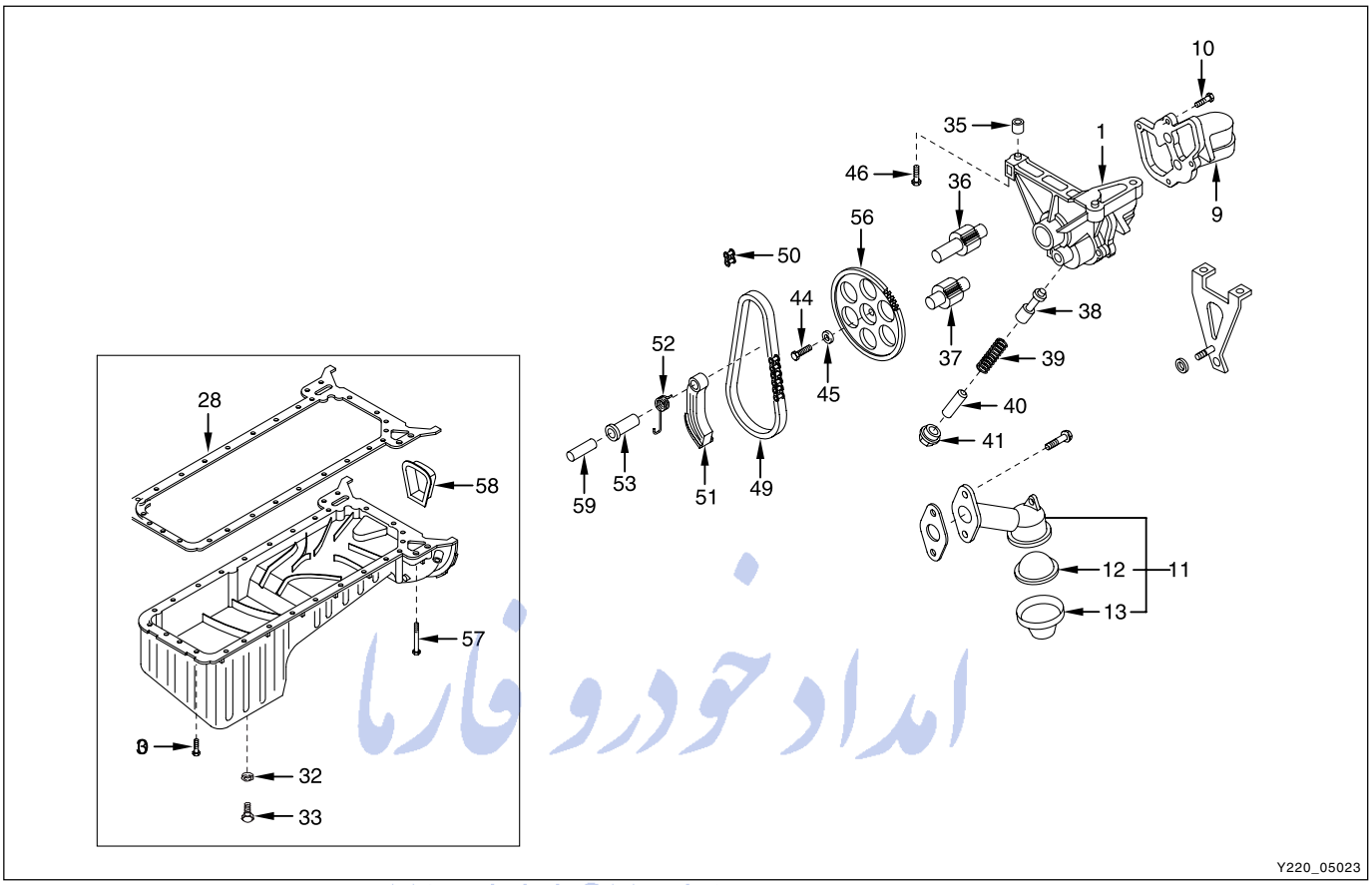

امداد خودرو فارما
۰۲۱-۸۸۸۶۲۰۸۵ تلفن شبانه روزی
FarmaSOS.com

1. Oil pump
9. Oil pump cover
10. Bolt
32. Drain plug
33. Drain plug ..... 25 ± 2.5 Nm(replace the washer)
35. Spring pin
36. Oil pump drive shaft
37. Oil pump driven shaft
38. Oil pump relief valve piston
39. Spring
40. Oil pump relief valve pin
41. Oil pump relief valve plug
44. Bolt ..... 10 Nm
45. Washer
46. Bolt
49. Oil pump roller chain
50. Oil pump chain lock link
51. Oil pump chain tensioner
52. Oil pump chain spring
53. Bush
56. Oil pump sprocket
57. Bolt
58. Dust cover
59. Cylindrical pin

CHANGED BY	
EFFECTIVE DATE	
AFFECTED VIN	

TROUBLE DIAGNOSIS

Symptom	Cause	Action
Excessive oil consumption	• Loosened oil drain plug	• Retighten
	• Loosen oil pan bolts	• Retighten
	• Poor sealing at oil pan gasket	• Replace
	• Loosened oil filter	• Retighten
	• Loosened oil pressure switch	• Retighten
	• Poor sealing at camshaft front oil seal	• Replace
	• Poor sealing at crankshaft front oil seal	• Replace
	• Poor sealing at crankshaft rear oil seal	• Replace
	• Poor sealing at cylinder head cover gasket	• Replace
	• Damaged cylinder head cover gasket	• Replace
	Oil intrusion into combustion chamber	
	• Stuck piston ring	• Remove carbon or replace ring
	• Worn piston or cylinder	• Boring or replace
	• Worn piston ring or ring groove	• Replace piston and piston ring
	• Improper position of ring cut-outs	• Adjust
	• Worn or damaged valve mechanism	• Replace
	• Oil leaks	• Repair
	• Defective turbo charger	• Check
Low engine oil pressure	Defective lubrication system	
	• Improper viscosity	• Replace with specified oil
	• Loosened oil pressure switch	• Retighten
	• Low engine oil level	• Add
	• Poor oil pump	• Replace
	• Worn or damaged oil pump relief valve	• Replace
	• Clogged oil filter or oil strainer	• Replace or clean
	• Oil leaks	• Repair

امداد خودرو فارس
تلفن شبانه روزی: ۰۲۱-۸۸۸۶۲۰۸۵
FarmaSOS.com

SPECIAL TOOLS AND EQUIPMENT

Name and Part Number	Application
103 589 02 09 00 **Engine filter cap** 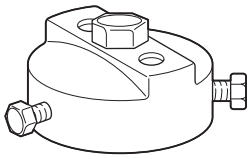 Y220_05024	

امداد خودرو فارما
تلفن شبانه روزی: ۰۲۱-۸۸۸۶۲۰۸۵
FarmaSOS.com

MEMO

امداد خودرو فارما
تلفن شبانه روزی: ۰۲۱-۸۸۸۶۲۰۸۵
FarmaSOS.com

SECTION DI06

COOLING SYSTEM

امداد خودرو فارما

تلفن شبانه روزی: ۰۲۱-۸۸۸۶۲۰۸۵

FarmaSOS.com

SECTION DI06

COOLING SYSTEM

Table of Contents

COOLING SYSTEM DI06-3

ENGINE COOLING SYSTEM DI06-4

Specifications DI06-10

INSPECTION AND REPAIR DI06-14

Inspection DI06-14

REMOVAL AND INSTALLATION DI06-16

PREHEATING SYSTEM DI06-29

Overview DI06-30

Preheating relay DI06-30

Preheating system diagram DI06-31

امداد خودرو فارما

۰۲۱-۸۸۸۶۲۰۸۰ تلفن شبانه روزی

FarmaSOS.com

CHANGED BY	
EFFECTIVE DATE	
AFFECTED VIN	

امداد خودرو فارما

تلفن شبانه روزی: ۸۸۸۶۲۰۸۵-۰۲۱

FarmaSOS.com

COOLING SYSTEM

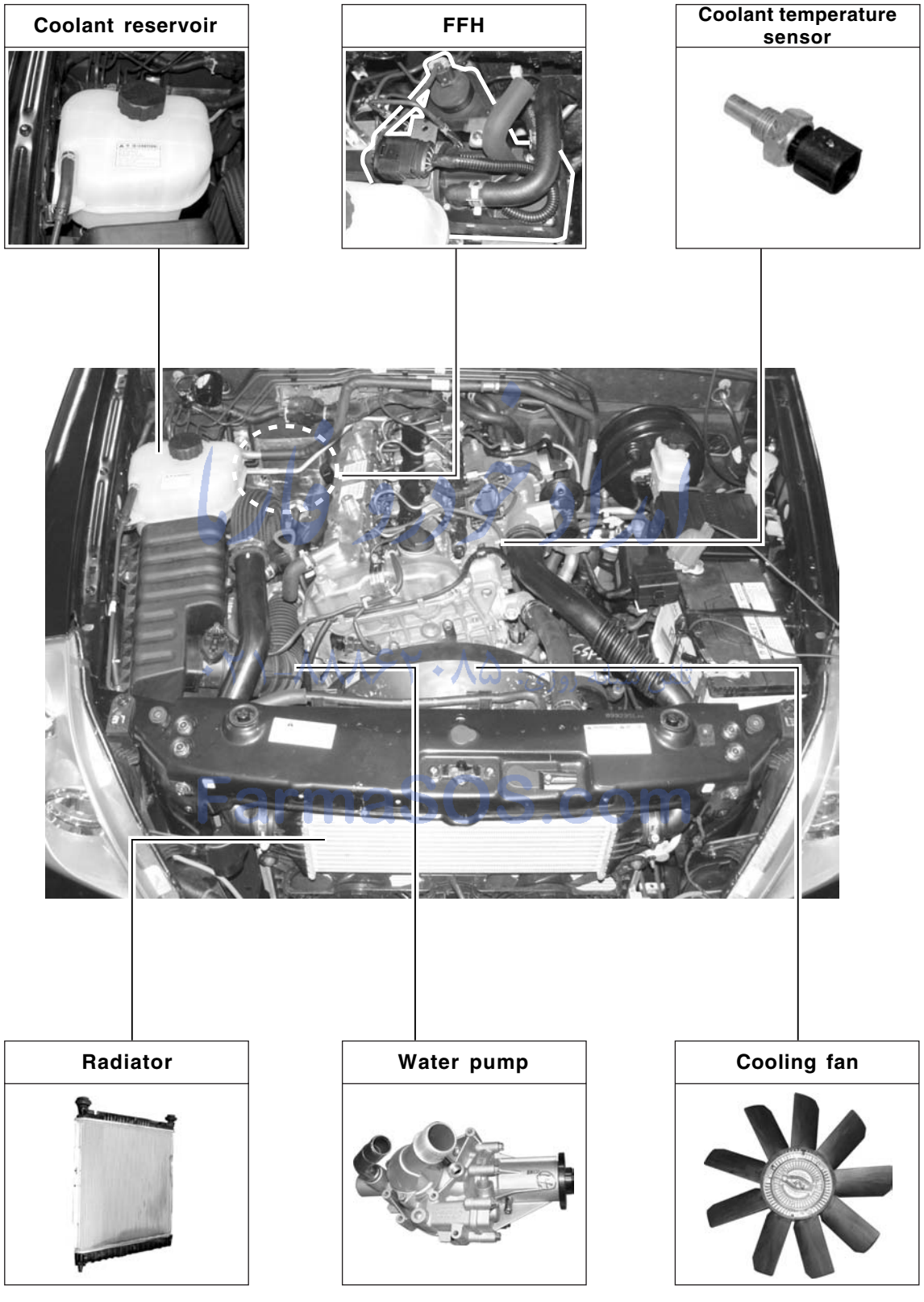

※ FFH (Fuel Fired Heater): refer to “FFH System” in this manual.

CHANGED BY	
EFFECTIVE DATE	
AFFECTED VIN	

ENGINE COOLING SYSTEM

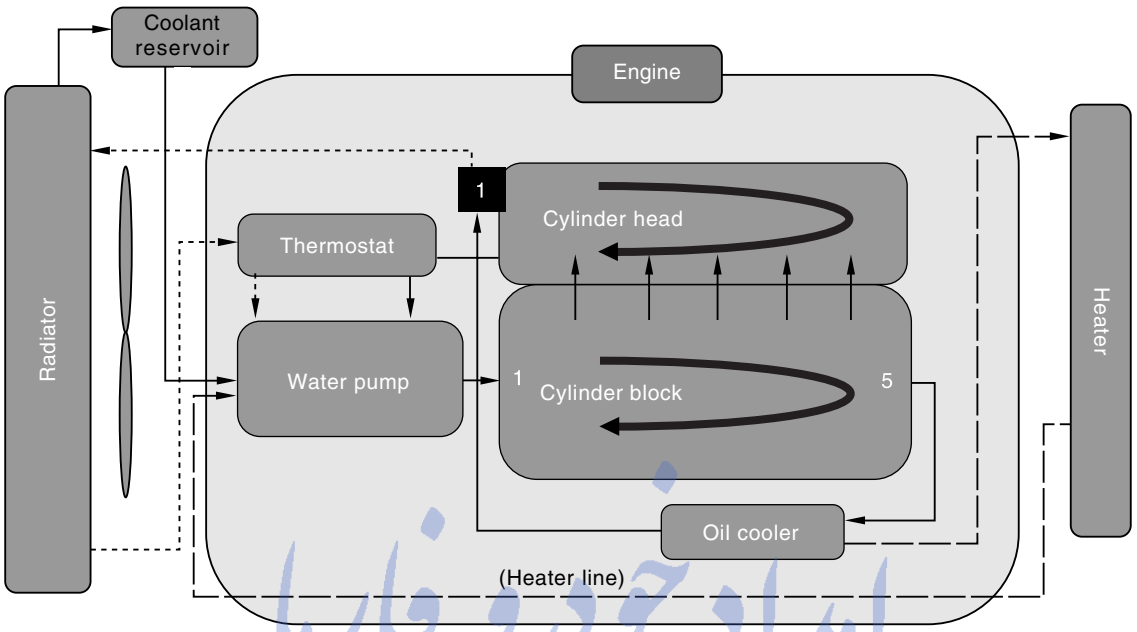

<PTC Engine Coolant Flows>

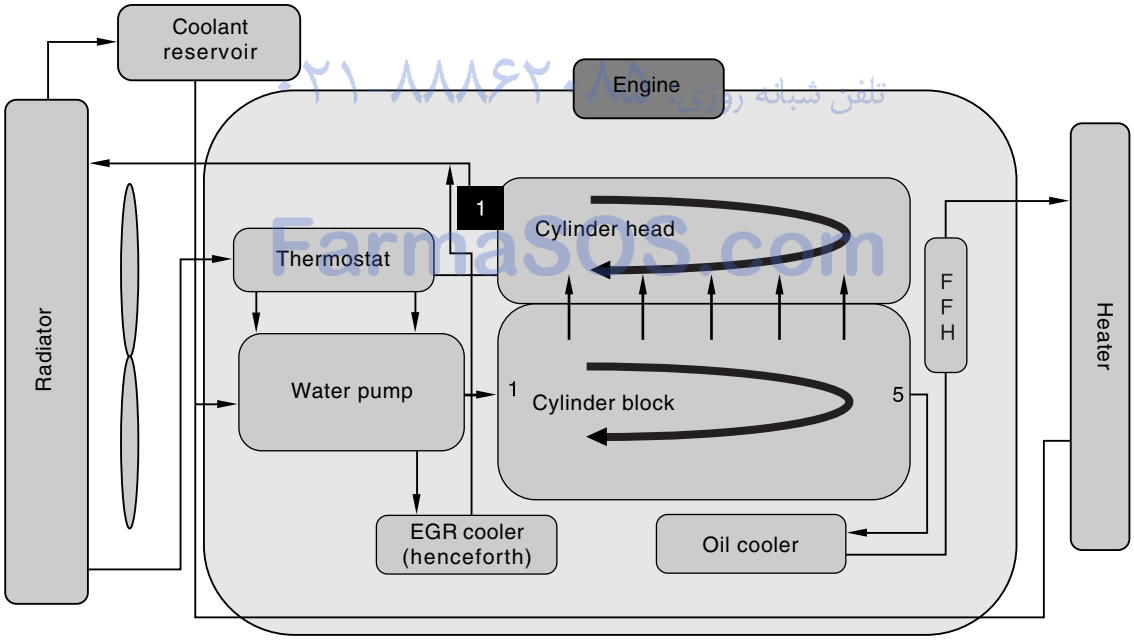

<FFH Engine Coolant Flows>

Y220_06002

- Cylinder block side
  Block #5 → Oil cooler → Heater → Heater water pump inlet pipe → Water pump
- Cylinder head side
  Cylinder head → Coolant outlet port (intake #1) → Radiator → Water pump

▶ Function Description



- Cylinder head coolant outlet port is integrated into intake manifold. (in front of cylinder #1)
  : Improved shape and gasket material to prevent coolant from leaking

امداد خودرو فارما
۰۲۱-۸۸۸۶۲۰۸۵ تلفن پشتیبانی روزی:
FarmaSOS.com

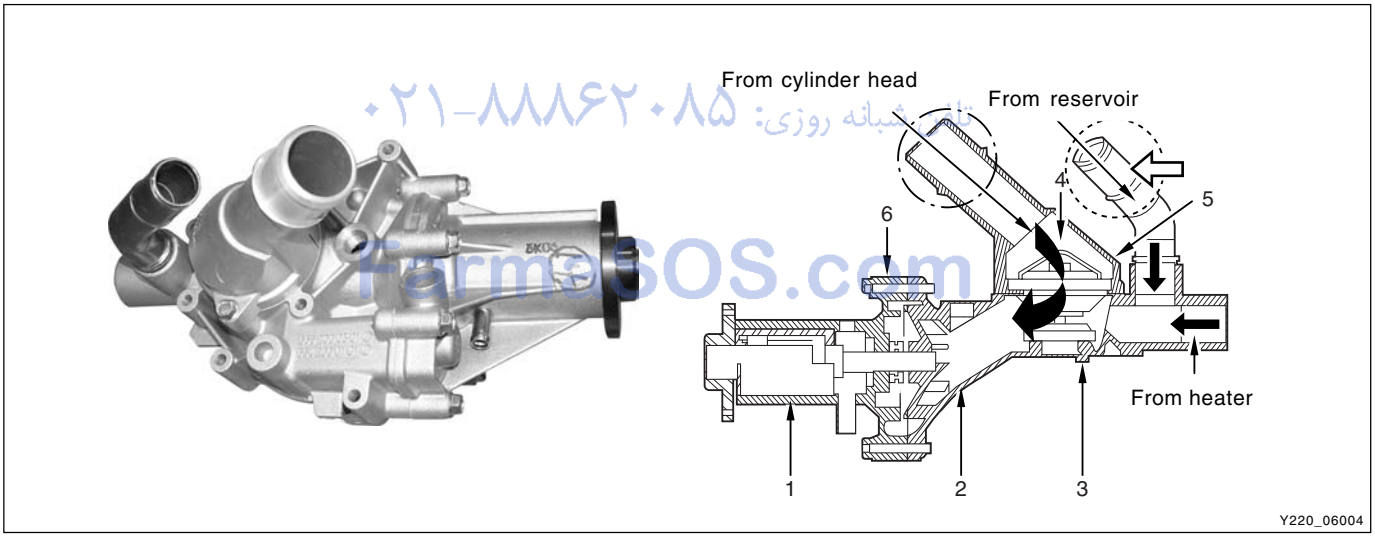

- In OM 600 engine, coolant inflows through the heater line rear section (cylinder #4 and #5) of cylinder head. However, in D27DT engine, coolant inflows from cylinder block through oil cooler (refer to coolant flows layout in previous page).
  : It prevents cooling efficiency from decreasing due to coolant separation between cylinder #4 and #5.

- In OM 600 engine, the cooling fan is installed with water pump, however, in case of D27DT engine, it is connected to water pump with an additional pulley.



Radiator

This vehicle has a lightweight tube-and-fin aluminum radiator. Be careful not to damage the radiator core when servicing.

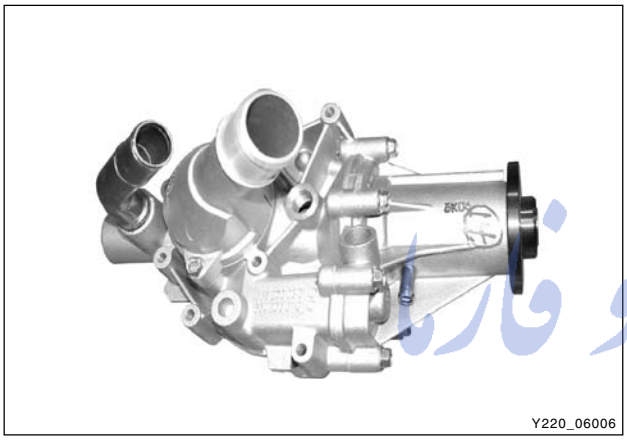

Water pump

The belt-driven centrifugal water pump consists of an impeller, a drive shaft, and a belt pulley. The impeller is supported by a completely sealed bearing.

The water pump is serviced as an assembly and, therefore, cannot be disassembled.

امداد خودرو فارما
تلفن شبانه روزی: ۰۲۱۸۸۸۶۲۰۸۵
FarmaSos.com



Coolant reservoir

Notice

Scalding hot coolant and steam could be blown out under pressure, which could cause serious injury. Never remove the coolant reservoir cap when the engine and radiator are hot.

The coolant reservoir is a transparent plastic reservoir, similar to the windshield washer reservoir. The coolant reservoir is connected to the radiator by a hose and to the engine cooling system by another hose. As the vehicle is driven, the engine coolant heats and expands. The portion of the engine coolant displaced by this expansion flows from the radiator and the engine into the coolant reservoir. The air trapped in the radiator and the engine is degassed into the coolant reservoir.

When the engine stops, the engine coolant cools and contracts. The displaced engine coolant is then drawn back into the radiator and the engine. This keeps the radiator filled with the coolant to the desired level at all times and increases the cooling efficiency. Maintain the coolant level between the MIN and MAX marks on the coolant reservoir when the system is cold.

▶ Thermostat



A wax pellet-type thermostat controls the flow of the engine coolant through the engine cooling system. The thermostat is mounted in the thermostat housing to the front of the cylinder head. The thermostat stops the flow of the engine coolant from the engine to the radiator to provide faster warm-up, and to regulate the coolant temperature. The thermostat remains closed while the engine coolant is cold, preventing circulation of the engine coolant through the radiator. At this point, the engine coolant is allowed to circulate only throughout the heater core to warm it quickly and evenly. As the engine warms, the thermostat opens. This allows the engine coolant to flow through the radiator where the heat is dissipated. This opening and closing of the thermostat permits enough engine coolant to enter the radiator to keep the engine within proper engine temperature operating limits. The wax pellet in the thermostat is hermetically sealed in a metal case. The wax element of the thermostat expands when it is heated and contracts when it is cooled. As the vehicle is driven and the engine warms, the engine coolant temperature increases. When the engine coolant reaches a specified temperature, the wax pellet element in the thermostat expands and exerts pressure against the metal case, forcing the valve open. This allows the engine coolant to flow through the engine cooling system and cool the engine. As the wax pellet cools, the contraction allows a spring to close the valve.

The thermostat begins to open at 85°C and is fully open at 100°C. The thermostat closes at 85°C.

امداد خودرو ثابتا
تلفن شبانه روزی: ۰۲۱-۸۸۶۲۰۸۵
FarmaSOS.com

Thermostat	Operating Temperature (°C)	Opening Value (mm)
Begins to open	85°C	0.1 mm
Fully open	100°C	8 mm

CHANGED BY	
EFFECTIVE DATE	
AFFECTED VIN	

When closed (up to 85°C)

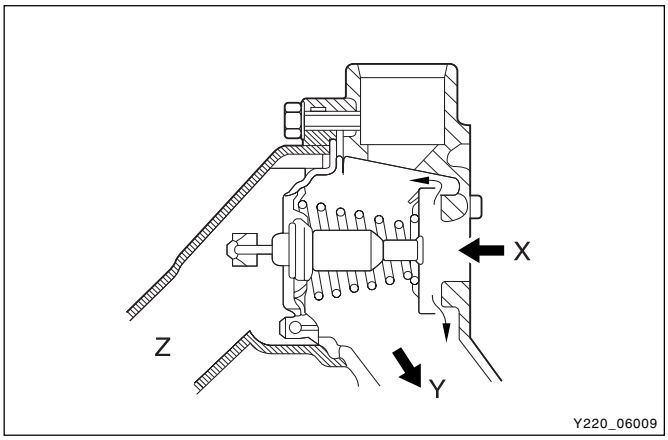

When partially opened (85°C ~ 100°C)

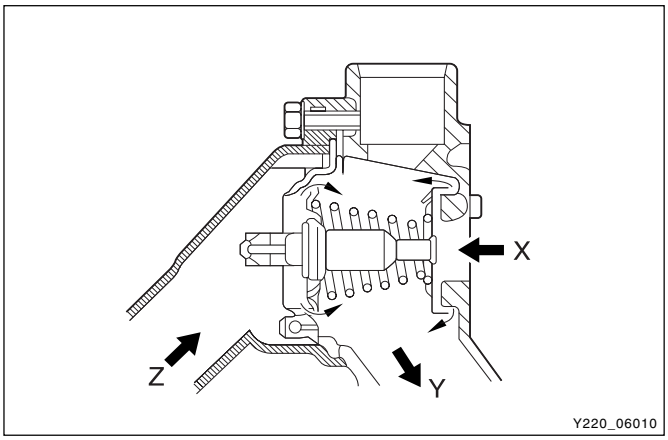

X. from vrankcase
Y. to crankcase
Z. from radiator

When fully opened (above 100°C)

If the cooling system is fully filled with, the coolant is automatically bled through ball valve (arrow) in thermostat.

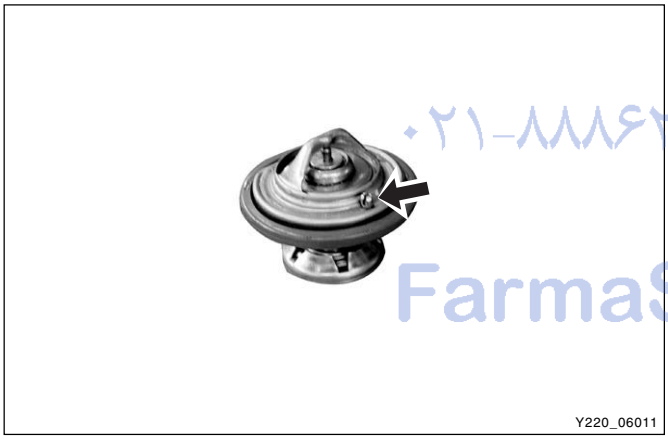

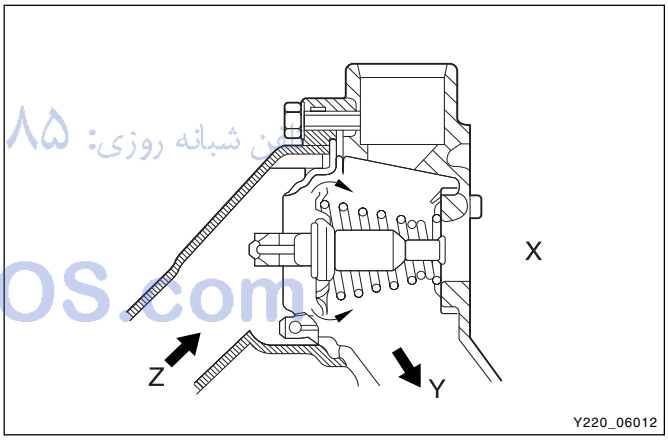

امداد خودرو فارما
۰۲۱-۸۸۸۶۲۰۸۵ تلفن شبانه روزی:
FarmaSOS.com

Viscous fan clutch

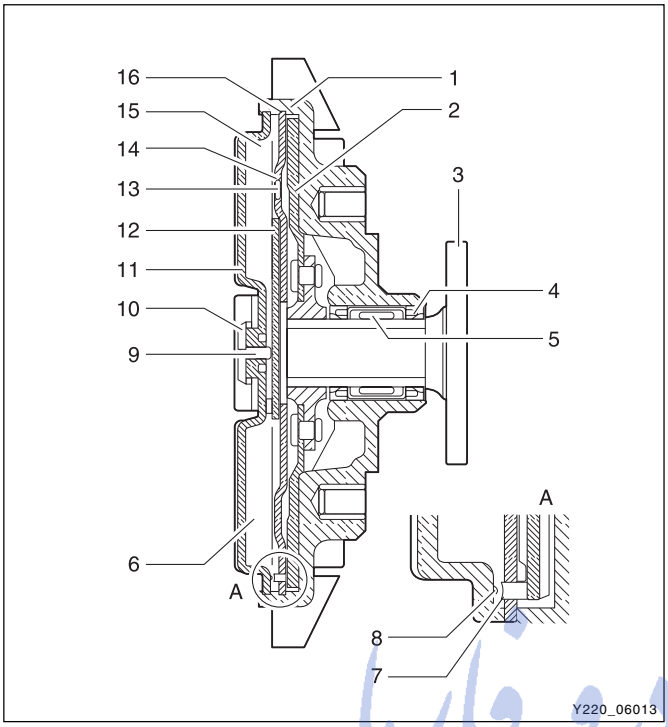

1. Clutch housing
2. Drive disc
3. Flange
4. Seal ring
5. Needle bearing
6. Cooling fan
7. Oil scraper
8. Spring
9. Pin
10. Bi-metal
11. Bracket cover
12. Separator disc
13. Supply port
14. Lever valve
15. Oil chamber
16. Operating chamber

The cooling speed increases approx. 1,000 rpm with wind noise when the engine speed is 4,000 to 4,500 rpm and the coolant temperature is 90 to 95°C.

Notice

Keep hands, tools, and clothing away from the engine cooling fans to help prevent personal injury. This fan is electric and can turn on even when the engine is not running.

Notice

If a fan blade is bent or damaged in any way, no attempt should be made to repair or reuse the damaged part. A bent or damaged fan assembly should always be replaced with a new one to prevent possible injury.

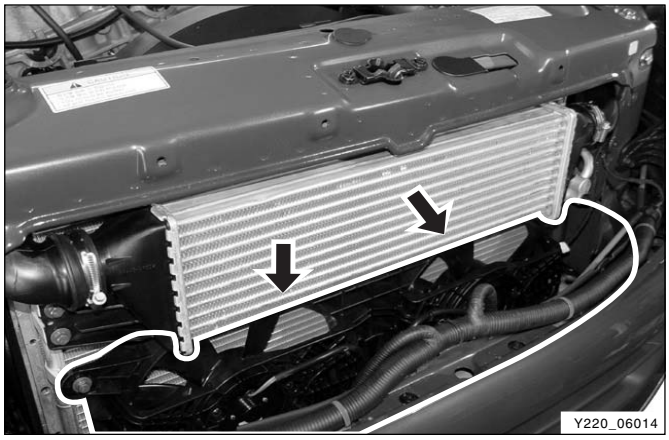

The cooling fans are mounted behind the radiator in the engine compartment. The electric cooling fans increase the flow of air across the radiator fins and across the condenser on air conditioner. The fan is 320 mm in diameter with five blades to aid the airflow through the radiator and the condenser. An electric motor attached to the radiator support drives the fan.

1. A/C Off or Non-AC Model
   - The cooling fan operates at low speed when the coolant temperature reaches 95°C and at high speed when the coolant temperature reaches 100°C.
   - The cooling fan is turned from high speed to low speed at 97°C and turns off at 90°C.
2. A/C On
   - The ECU will turn the cooling fan on at high speed when the A/C system is on.

FarmaSOS.com

Engine coolant temperature sensor

The Engine Coolant Temperature (ECT) sensor uses a temperature to control the signal voltage to the Engine Control Unit (ECU).

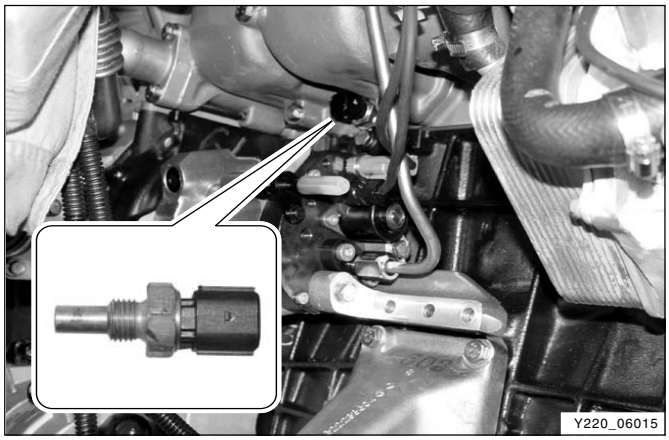

CHANGED BY	
EFFECTIVE DATE	
AFFECTED VIN	

SPECIFICATIONS

Description			Unit	Specification
Cooling system	Type		-	Water cooling forced circulation
Coolant	Capacity		ℓ	11.3
Thermostat	Type		-	Wax pellet type
	Initial opening temperature	DI Engine	°C	85
		IDI Engine	°C	80
	Fully opening temperature	DI Engine	°C	100
		IDI Engine	°C	95
	Fully closing temperature	DI Engine	°C	83
		IDI Engine	°C	78
	Stroke	DI Engine	mm	min. 8
		IDI Engine	mm	min. 8
Cooling fan	Type		-	Electric
	Blades			5
	Diameter		mm	320 (2)
	Low speed ON temp		°C	91
	Low speed OFF temp		°C	88
	High speed ON temp		°C	95
	High speed OFF temp		°C	92
	High speed ON temp. (By A/C pressure)		psi	270
Coolant reservoir	pressure valve opening pressure		Kg/cm^2	1.2 ~ 1.5
	Vacuum valve opening pressure		Kg/cm^2	0.1
Water pump	Type		-	Turbo centrifugal
	Impeller diameter		mm	72.3
	Impeller blades			10
Radiator	Type		-	Down-flow
	Core width		mm	701
	Core height		mm	372
	Core thickness		mm	18
	Minimum radiation capability		Kcal/h	45,000
Coolant temperature sensor	Resistance (at 20°C)		KΩ	3.33 ~ 3.78
	Resistance (at 80°C)		KΩ	0.32 ~ 0.35
Anti-freeze agent	Type		–	ALUTEC-P78
	Mixture ratio (water and anti-freeze)		–	50 : 50

FarmaSOS.com

CHANGED BY	
EFFECTIVE DATE	
AFFECTED VIN	

▶ Coolant Level Check

Notice

- ***Scalding hot coolant and steam could be blown out under pressure, which could cause serious injury. Never remove the coolant reservoir cap when the engine and radiator are hot.***
- ***Take precautions to prevent antifreeze coming in contact with the skin, eyes or vehicle body. If contact happens, rinse affected areas immediately with plenty of water.***

1. Place the vehicle on a level ground and check the coolant level through the coolant reservoir.
2. Add if needed. Change the coolant if necessary.

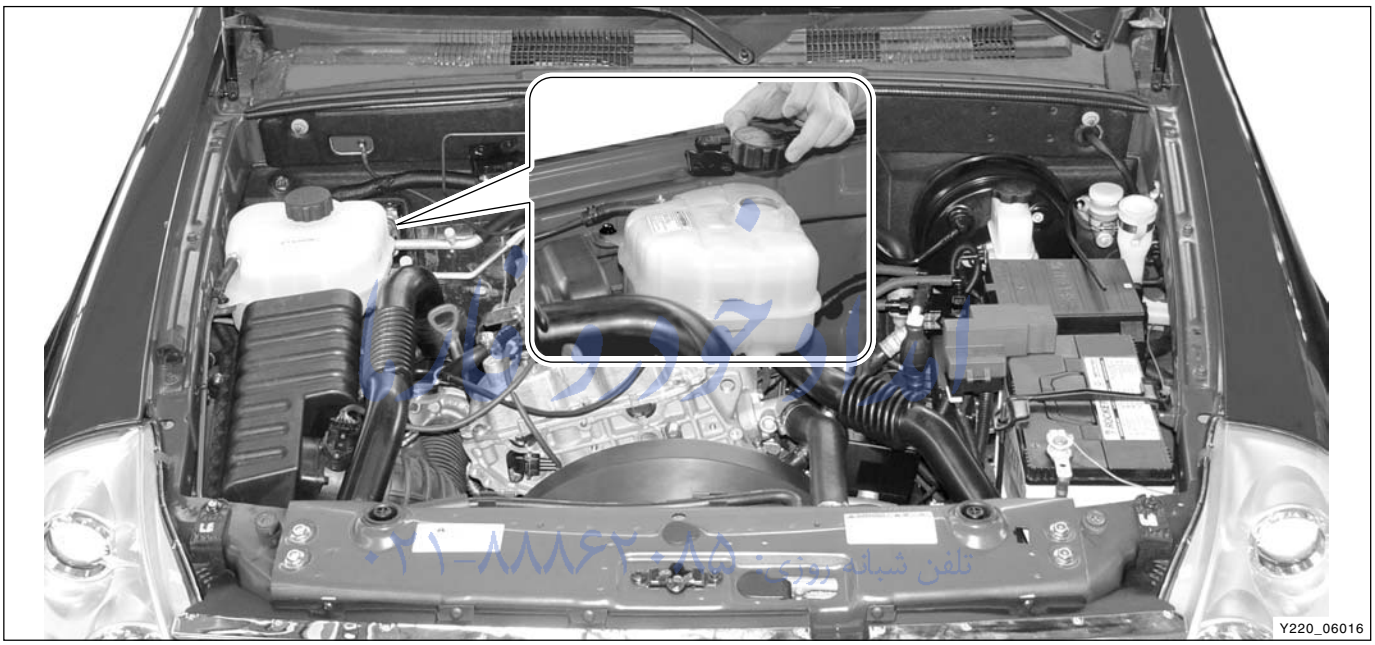

FarmaSOS.com

CHANGED BY	
EFFECTIVE DATE	
AFFECTED VIN	

▶ Coolant Temperature Sensor



<Coolant Temperature Sensor>

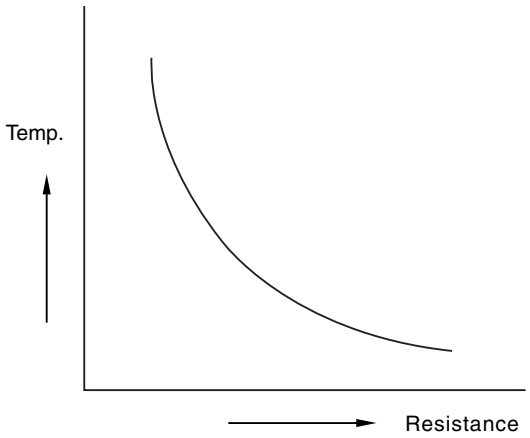

<Output Characteristics of Coolant Temperature Sensor>

Y220_06017

Coolant temperature sensor is a NTC resister that sends coolant temperature to ECU.

NTC resister has characteristics that if the engine temperature rises, the resistance lowers so the ECU detects lowering signal voltages.

If the fuel injected into the engine through injector has more turbulence, then combusts very well. However, if engine temperature is too low, the fuel injected as foggy state forms big compounds causing incomplete combustion. So the sensor detects coolant temperature and changes coolant temperature changes into voltage then sends to ECU to increase the fuel volume during cold start for better starting. And detects engine overheating for fuel volume reduction to protect the engine.

ECU functions as below with coolant temperature sensor signals.

- When engine is cold, controls fuel volume to correct idle speed
- When engine is overheated, controls electrical fan and A/C compressor to protect the engine
- Sends information for emission control

FarmaSOS.com

Temperature	NTC 1 Resistance (Ω)	NTC 2 Resistance (Ω)
20	2,550	6,062
50	826	1,800
80	321	638
120	123	200

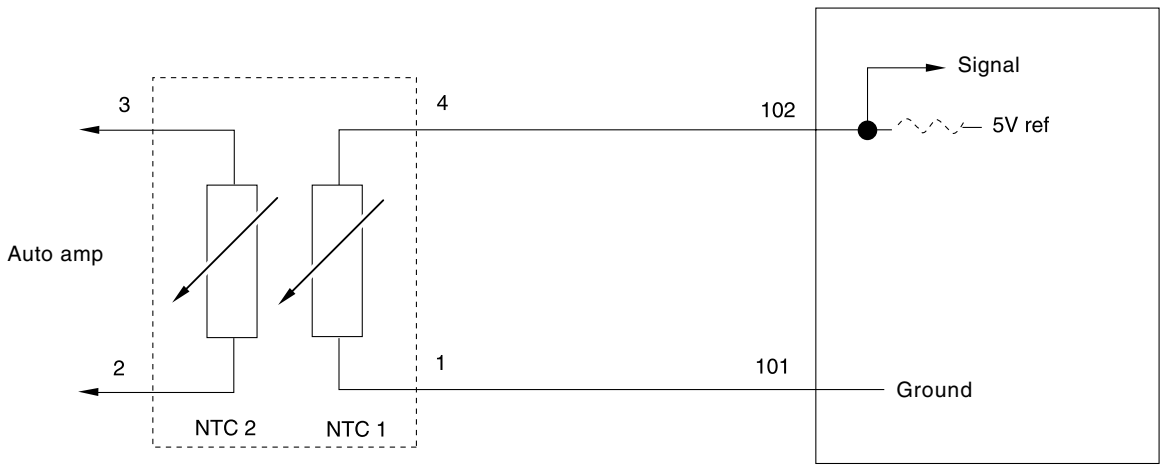

<Coolant Temperature Sensor Circuit>

Y220_06018

▶ Trouble Diagnosis

Symptom	Cause	Action
Low coolant level	• Leaks in radiator	• Replace radiator
	• Leaks in coolant reservoir	• Replace coolant reservoir
	• Leaks in heater core	• Replace heater
	• Leaks in hose connection	• Reconnect hose or replace clamp
	• Damaged coolant hose	• Replace hose
	• Leaks in water pump gasket	• Replace gasket
	• Leaks in water pump internal seal	• Replace water pump
	• Leaks in coolant inlet cap	• Replace water inlet cap gasket
	• Leaks in thermostat housing	• Replace thermostat sealing
	• Improper tightening torque of cylinder head	• Retighten
	• Damaged cylinder head gasket	• Replace cylinder head gasket
Excessively high coolant temperature	• Coolant leaks (too low coolant level)	• Add coolant
	• Improper coolant mixture ratio	• Check coolant concentration
	• Kinked coolant hose	• Repair or replace hose
	• Defective thermostat	• Replace thermostat
	• Defective water pump	• Replace water pump
	• Defective radiator	• Replace radiator
	• Defective coolant reservoir and cap	• Replace coolant reservoir or cap
	• Cracks on cylinder head or cylinder block	• Replace cylinder head or cylinder block
	• Clogged coolant passages in cylinder head or cylinder block	• Clean coolant passages
	• Clogged radiator core	• Clean radiator core
	• Improper operation of cooling fan	• Replace cooling fan or repair related circuit
	• Faulty temperature sensor or defective harness	• Replace sensor or repair related circuit
Excessively low coolant temperature	• Stuck thermostat (with open)	• Replace thermostat
	• Improper operation of cooling fan	• Replace cooling fan or repair related circuit
	• Faulty temperature sensor or defective harness	• Replace sensor or repair related circuit

امداد خودرو فارما
FarmaSOS.com

CHANGED BY	
EFFECTIVE DATE	
AFFECTED VIN	

INSPECTION AND REPAIR

INSPECTION



Cooling System

1. Release the pressure from coolant reservoir by loosening one notch of coolant reservoir cap, and then remove the cap.

   Notice

   Scalding hot coolant and steam could be blown out under pressure, which could cause serious injury. Never remove the coolant reservoir cap when the before the temperature goes down below 90°C.

2. Add the coolant up to upper mark (arrow) on the reservoir.

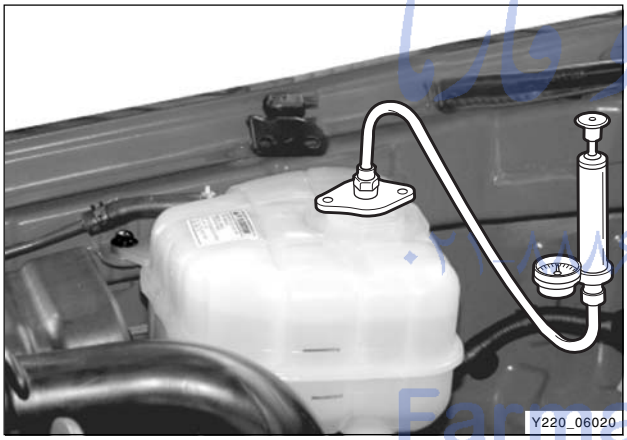

3. Install the tester to the coolant reservoir and apply the pressure of 1.4 bar.
4. Check the coolant hoses, pipes and connections for leaks after the pointer of the tester drops. Replace or retighten as required.

تلفن شبانه روزی: ۰۲۱-۷۷۴۶۲۰۸۵
FarmaSOS.com

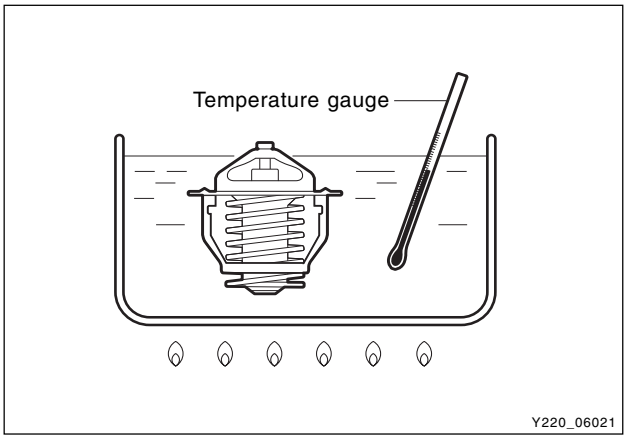

Thermostat

Immerse the thermostat into the water. Heat the water and check the valve opening temperature.

Valve opening temperature	DI Engine: 85 ± 2°C

Coolant Temperature Gauge Unit

1. Immerse the senor unit into the water. Heat the water and check the resistance.

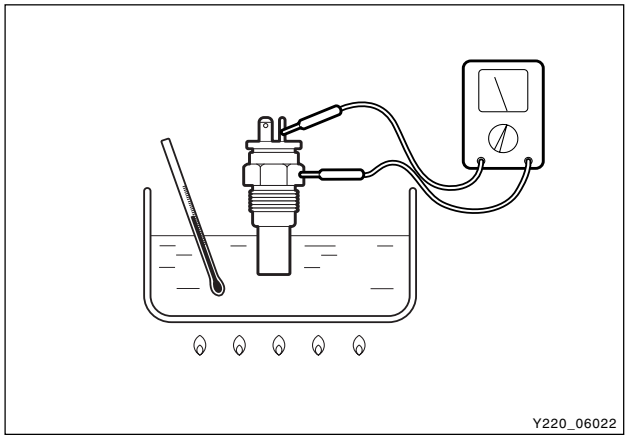

2. If the measured resistance is out of specified value, replace the gauge unit.
3. Measure the resistance between terminal A and gauge unit housing, and terminal B and gauge unit housing.

Terminal A (for coolant temp.)	0.4 Ω / 79°C
	23.8 Ω / 115°C
Terminal B (for glow plug)	24.8 Ω / -20°C
	3.25 Ω / 20°C

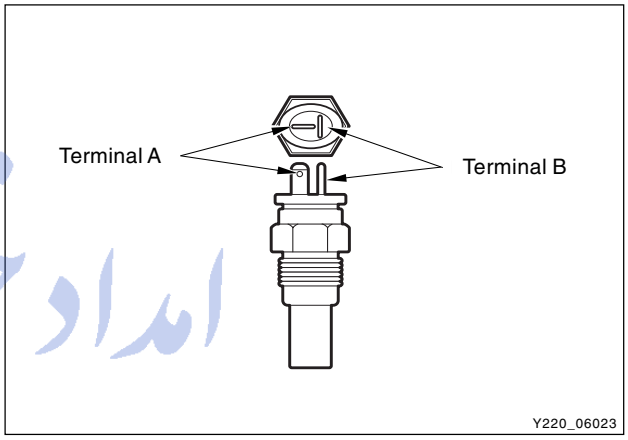

Thermostat

1. Immerse the thermostat into the oil. Heat the oil until it reaches the specified temperature and check if the coolant temperature switch is turned “OFF”.

Coolant temperature at point A	113 ± 3°C
Coolant temperature at point B	116°C

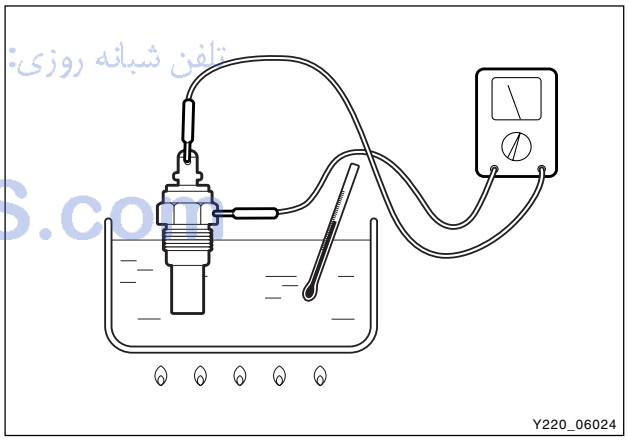

Notice

Use only engine oil for this inspection. Stir the oil during heating it. Never heat the oil over required temperature.

امداد خودرو فارما
تلفن شبانه روزی: ۰۲۱-۸۸۸۶۲۰۸۵
FarmaSOS.com

CHANGED BY	
EFFECTIVE DATE	
AFFECTED VIN	

REMOVAL AND INSTALLATION

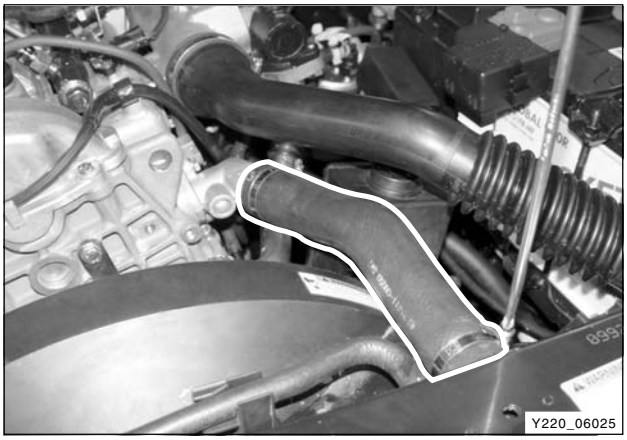

Coolant Hose (Inlet/Outlet)

※ Preceding Work: Draining of coolant

1. Loosen the clamp and remove the coolant outlet hose (engine to radiator).

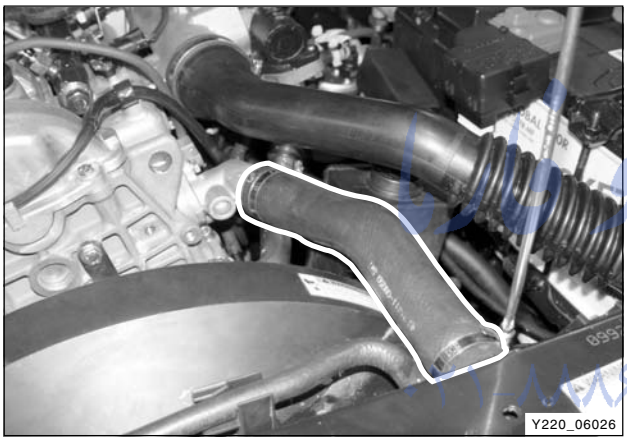

2. Disconnect the HFM sensor connector.
3. Remove the air intake duct from the air cleaner.

امداد خودرو
تلفن شبانه روزی: ۰۲۱-۸۸۶۲۰۸۵

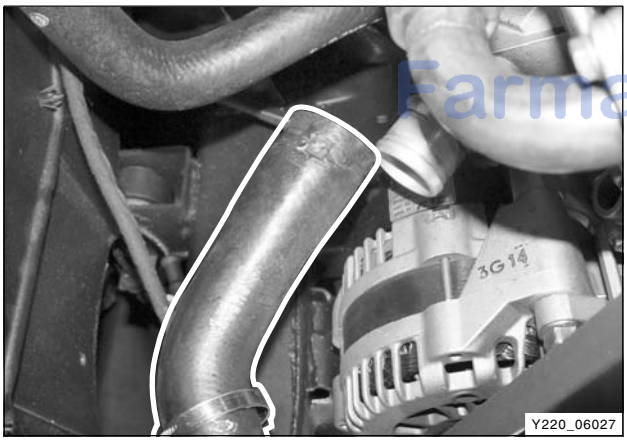

4. Loosen the clamp and remove the coolant inlet hose (radiator to thermostat housing).

FarmaSOS.com

5. Lift up the vehicle and remove the skid plate.
6. Loosen the clamp and remove the lower inlet hose.

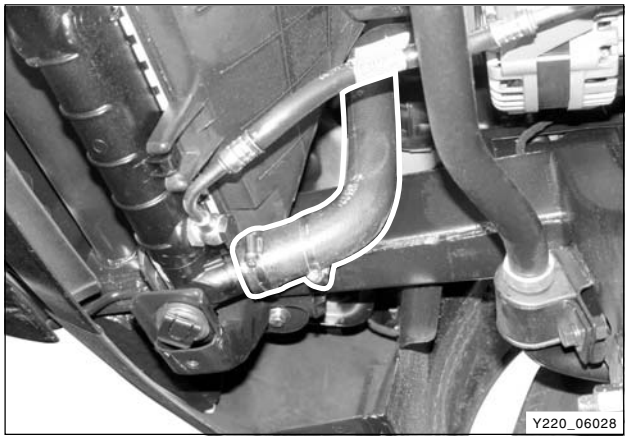

Shroud and Cooling Fan/Clutch

※ Preceding Works:
- Draining of coolant
- Removal of coolant inlet and outlet hose
- Removal of V-belt

1. Remove the radiator grille.

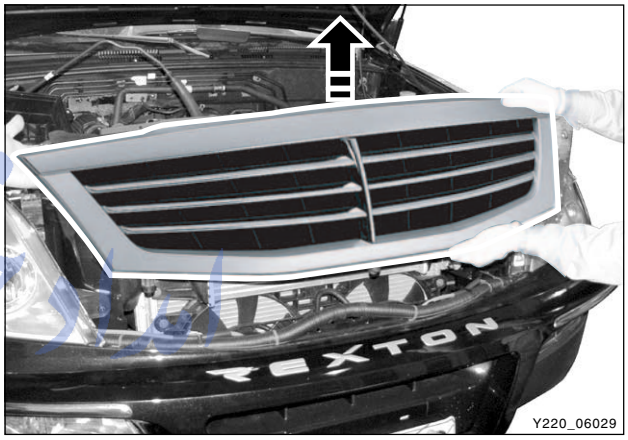

2. Remove the air intake hoses.
3. Set aside the coolant return pipe.

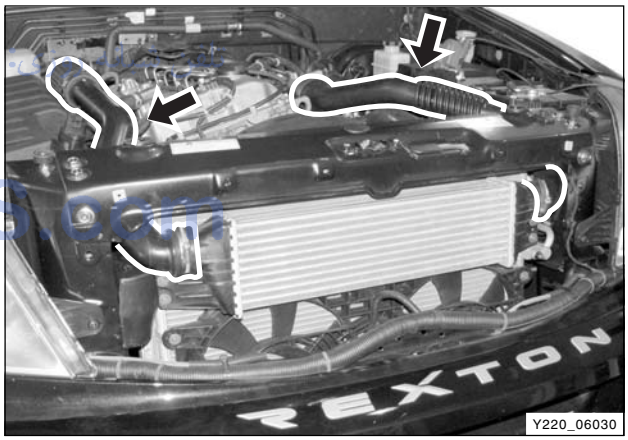

4. Unscrew the upper bolts and loosen the shroud.

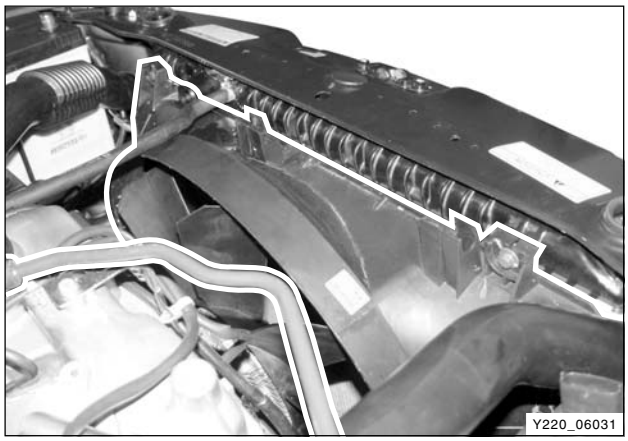

FarmaSOS.com

CHANGED BY	
EFFECTIVE DATE	
AFFECTED VIN	

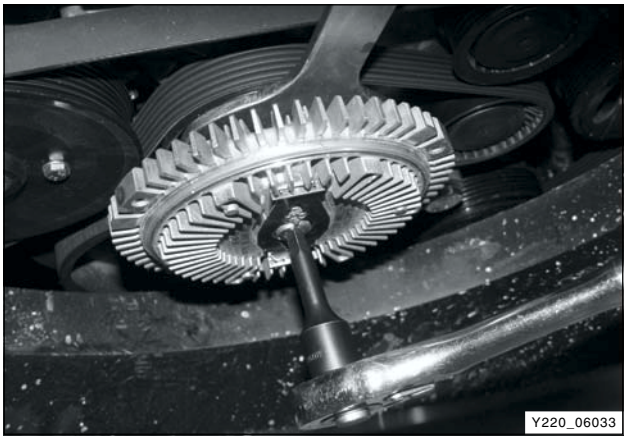

5. Unscrew the center bolt and remove the cooling fan clutch while holding the pulley with counter holder (special tool).

Installation Notice

Tightening torque	45 ± 4.5 Nm

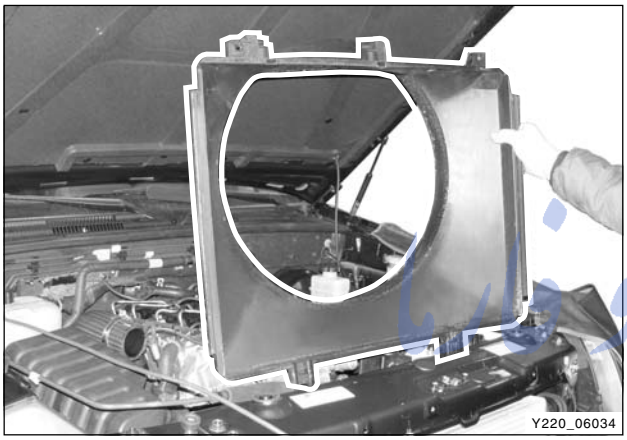

6. Remove the shroud.
7. Install in the reverse order of removal.

امداد خودروسازها
تلفن شبانه روزی: ۰۲۱-۸۸۸۶۲۰۸۵
FarmaSOS.com

Water Pump - Assembly

※ Preceding Works:

- Draining of coolant
- Removal of V-belt
- Removal of shroud
- Removal of cooling fan

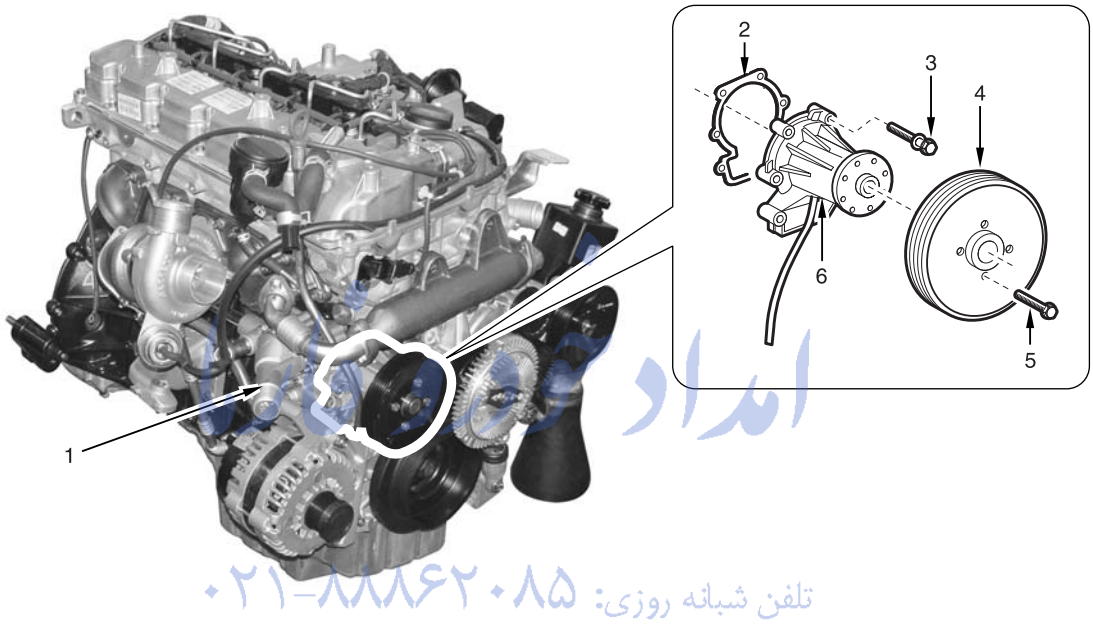

امداد خودرو
تلفن شبانه روزی: ۰۲۱-۸۸۸۶۲۰۸۵
FarmaSOS.com

1. Thermostat housing
2. Gasket ..... Replace
3. Bolt ..... 10 Nm
4. Belt pulley
5. Bolt ..... 10 Nm
6. Water pump

1. Remove the V-belt while pressing down the auto tensioner adjusting bolt.



CHANGED BY	
EFFECTIVE DATE	
AFFECTED VIN	



2. Unscrew the bolts and remove the EGR pipe and bracket.

Installation Notice

Tightening torque	23 ± 2.3 Nm

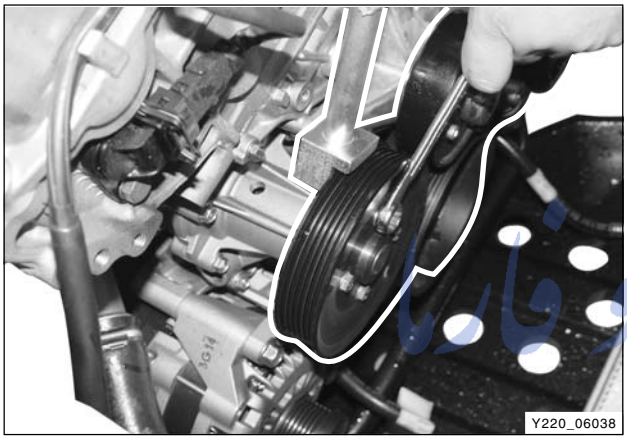

3. Unscrew the bolts and remove the belt pulley while holding the belt pulley with a special tool.

Installation Notice

Tightening torque	10 Nm

امداد خودرو فارما
تلفن شبانه روزی: ۰۲۱-۸۸۴۶۲۰۸۵
FarmaSOS.com

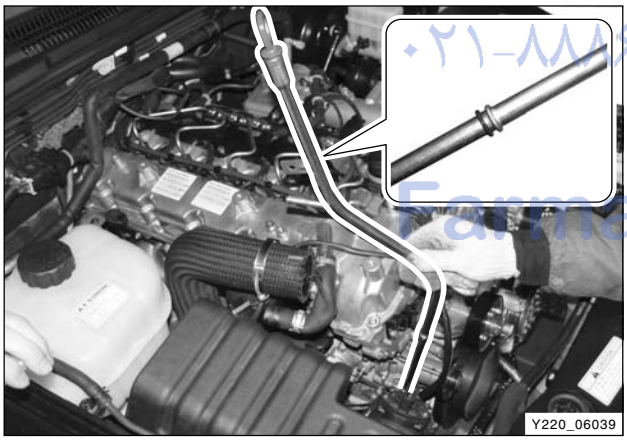

4. Remove the oil dipstick tube.

Notice

- ***Replace the O-ring in oil dipstick with new one.***
- ***Plug the oil dipstick hole with a cap not to get the foreign materials into the engine.***

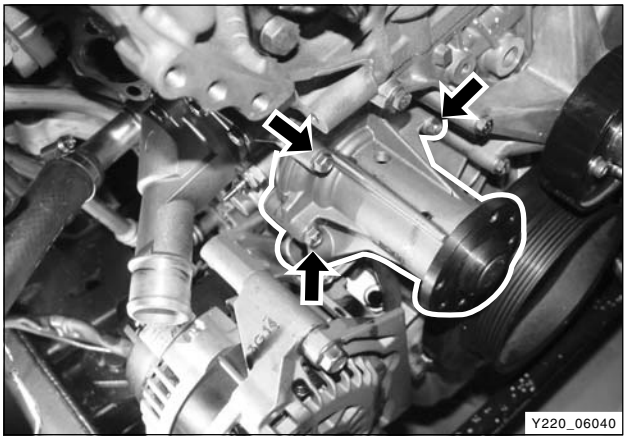

5. Unscrew the bolts and remove the water pump assembly.

Installation Notice

Tightening torque	10 Nm

Notice

Remove the gasket residues from the sealing surface and replace the gasket with new one.

6. Install in the reverse order of removal.

Thermostat

* Preceding Works:
  - Draining of coolant
  - Removal of V-belt
  - Removal of cooling fan
  - Removal of intake duct (air cleaner to turbo charger)

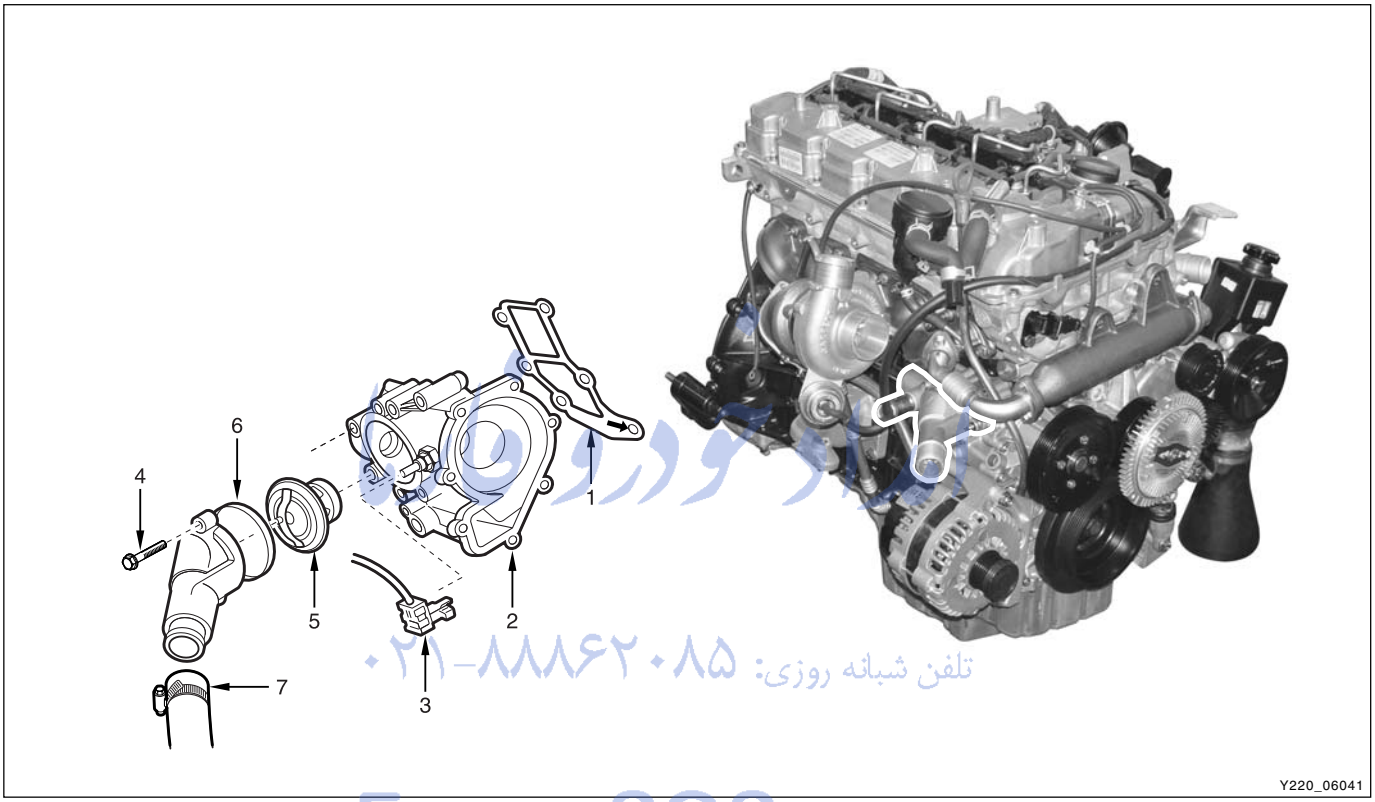

تلفن شبانه روزی: ۰۲۱-۸۸۸۶۲۰۸۵
FarmaSOS.com

1. Gasket ..... Replace
2. Water pump housing
3. Connector
4. Bolt ..... 10 Nm
5. Thermostat
6. Seal
7. Coolant hose

CHANGED BY	
EFFECTIVE DATE	
AFFECTED VIN	

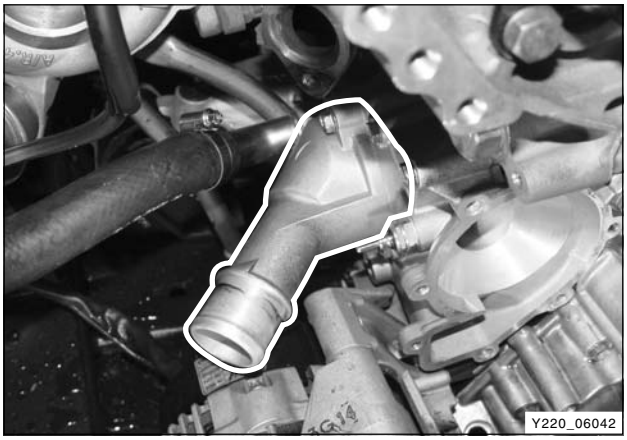

1. Unscrew the bolts and remove the thermostat housing.

Installation Notice

Tightening torque	10 ± 1.0 Nm

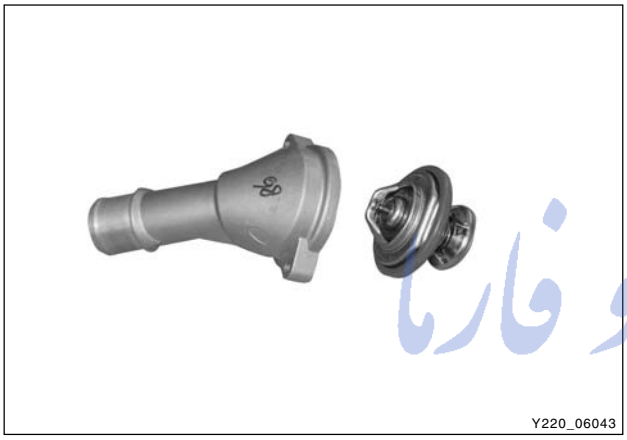

2. Remove the thermostat.
3. Install in the reverse order of removal.

امداد خودرو فارما
تلفن شبانه روزی: ۰۲۱-۸۸۸۶۲۰۸۵
FarmaSOS.com

Water Pump Housing

※ Preceding Works:
- Removal of water pump assembly
- Removal of thermostat assembly

1. Remove the heater hose.

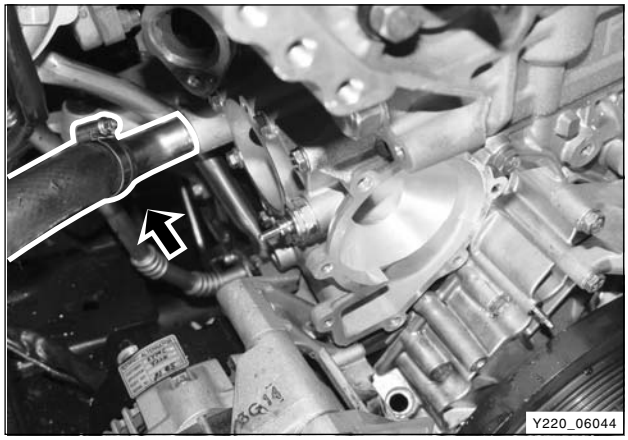

2. Unscrew the bolts and remove the alternator.

Installation Notice

Tightening torque	46 ± 4.6 Nm

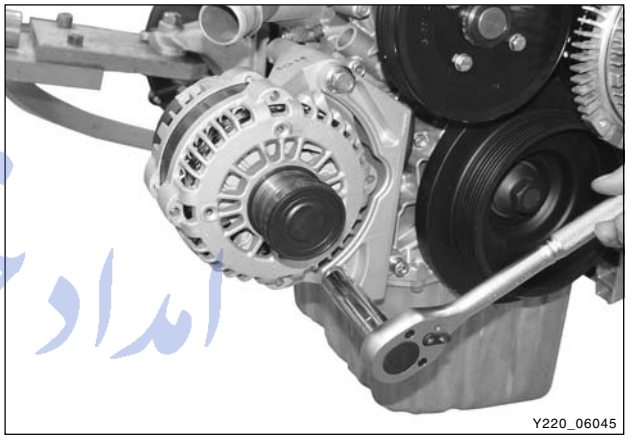

3. Unscrew the bolts and remove the alternator bracket.

Installation Notice

Tightening torque	25 ± 2.5 Nm

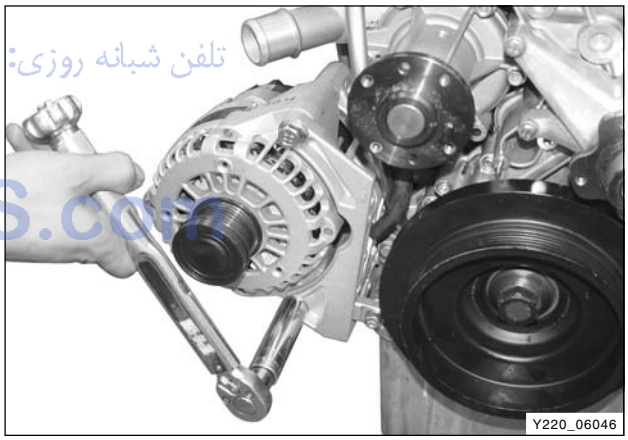

4. Unscrew the bolts and remove the water pump housing.

Installation Notice

Tightening torque	10 ± 1.0 Nm

Notice

- ***Be careful not to damage the O-ring in coolant outlet pipe (cylinder head side).***
- ***Remove the gasket residues from the sealing surface and replace the gasket with new one.***

5. Install in the reverse order of removal.

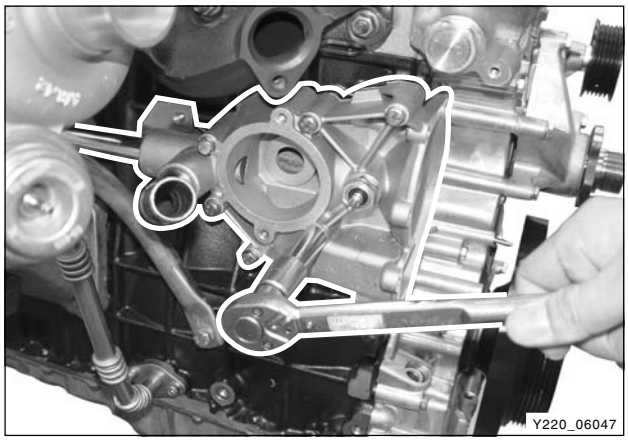

امداد خودرو فارما
تلفن شبانه روزی: ۰۲۱-۸۸۸۶۲۰۸۵
FarmaSOS.com

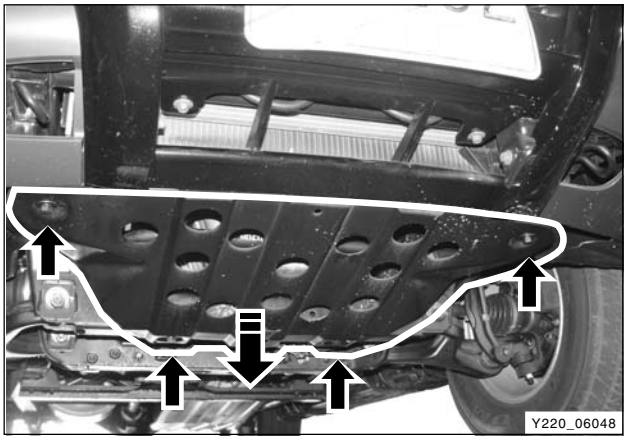

Radiator

※ Preceding Work: Draining of coolant

1. Lift up the vehicle and remove the skid plate.

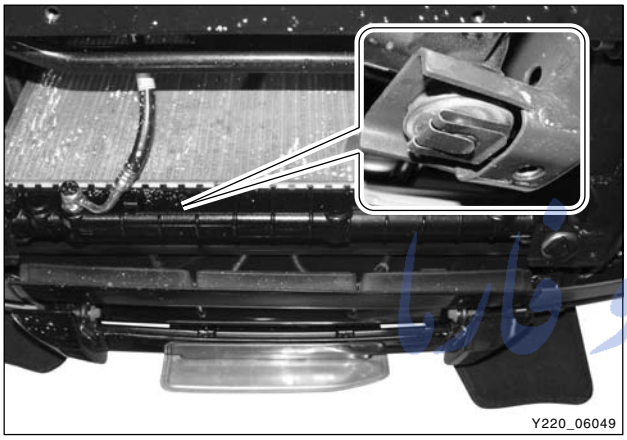

2. Remove the clips and washers from bottom of radiator at both sides.

Notice

Be careful not to damage the rubber bushing.

امداد خودرو فارا
تلفن شبانه روزی: ۰۸۸۶۲۰۸۵
FarmaSOS.com

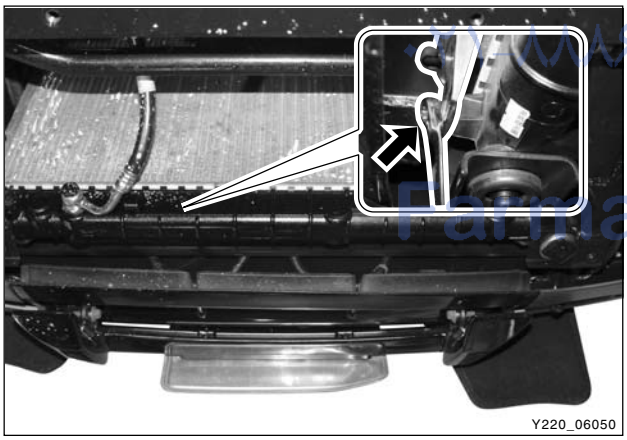

3. Unscrew the bracket mounting bolts under the radiator condenser.

Installation Notice

Tightening torque	10 ± 1.0 Nm

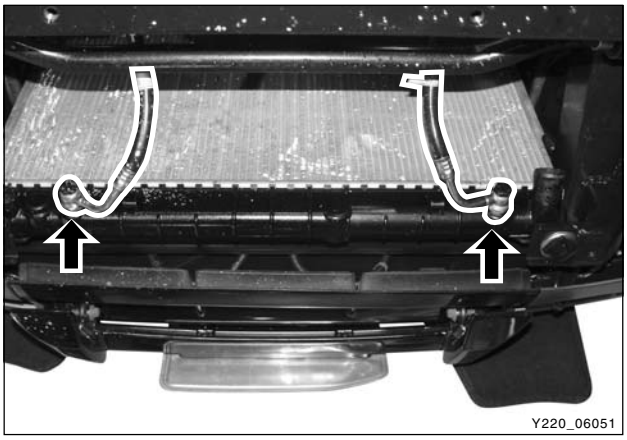

4. Disconnect the oil inlet and outlet hoses from bottom of radiator.

Notice

- ***Plug the radiator oil holes with caps.***
- ***Replace the hose washers with new ones.***

5. Remove the coolant outlet hose.

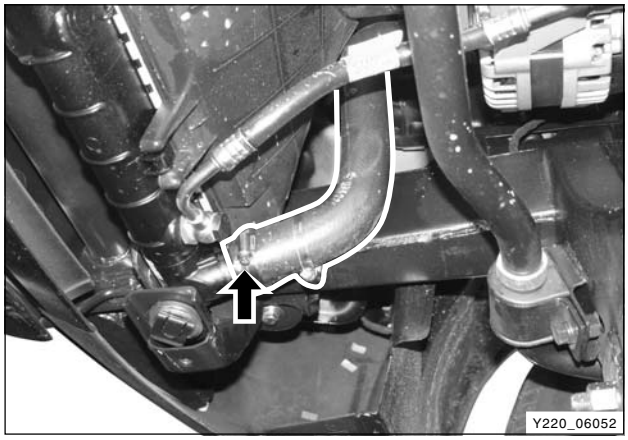

6. Remove the radiator grille.

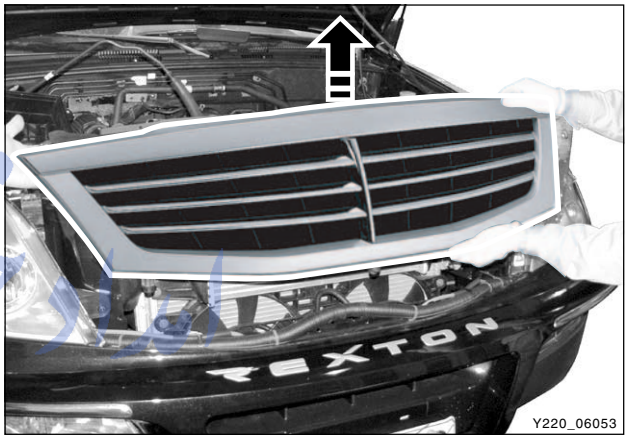

7. Remove the coolant inlet hose and the cooler inlet hose.
8. Remove the coolant return hose.

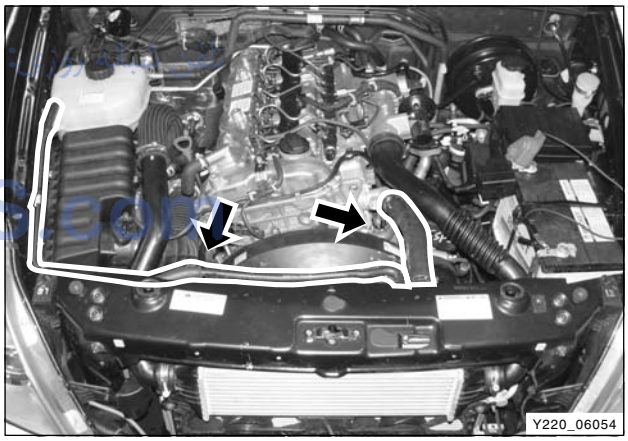

9. Unscrew the bolts and remove the shroud.

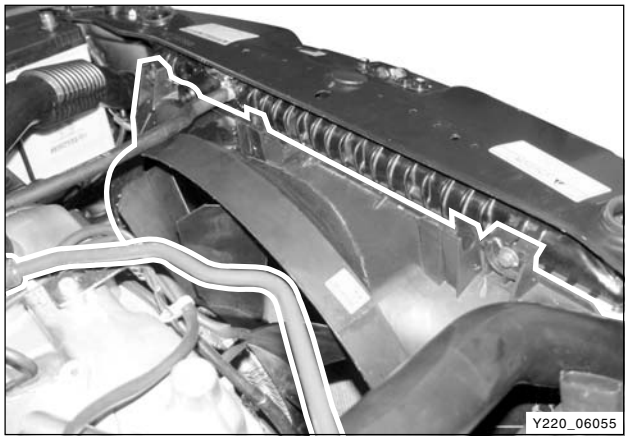

FarmaSOS.com

CHANGED BY	
EFFECTIVE DATE	
AFFECTED VIN	

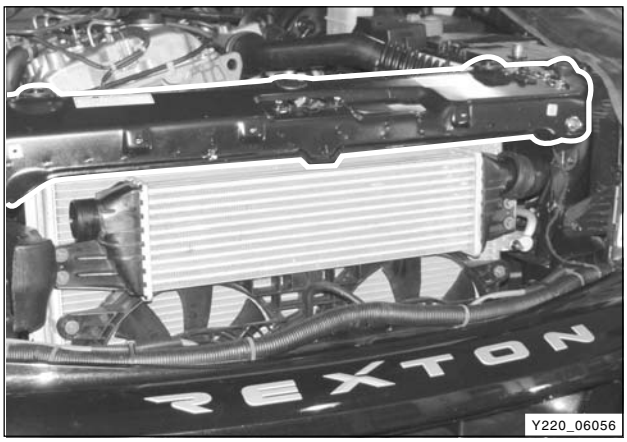

10. Unscrew the bolts and remove the radiator upper plate.

Installation Notice

Tightening torque	10 ± 1.0 Nm

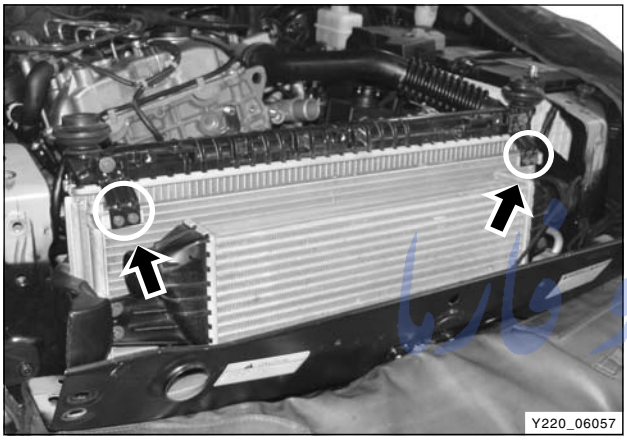

11. Unscrew the bracket mounting bolts on the radiator condenser.

Installation Notice

Tightening torque	10 ± 1.0 Nm

امداد خودرو فارما
تلفن شبانه روزی: ۰۲۱-۸۸۸۶۲۰۸۵
FarmaSOS.com

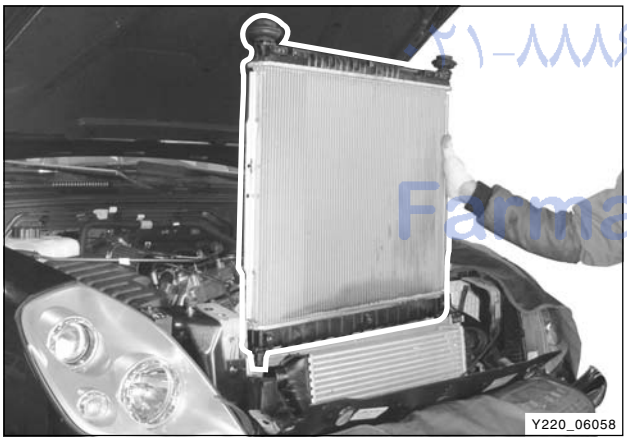

12. Remove the radiator by pulling it up carefully.

13. Install in the reverse order of removal.

Coolant Reservoir

1. Drain the coolant.
2. Remove the hoses.

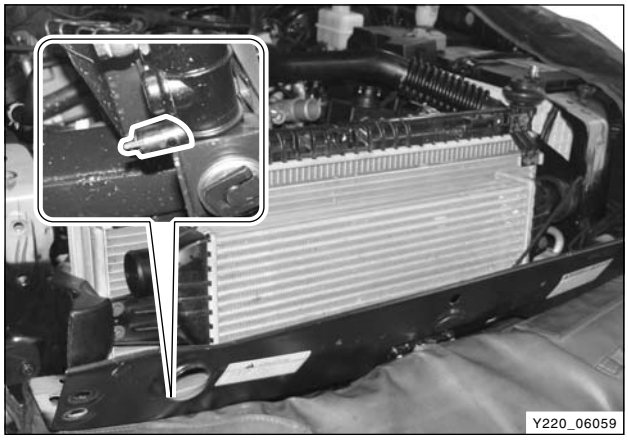

3. Unscrew the bolts and remove the coolant reservoir.

Installation Notice

Tightening torque	7 Nm



4. Install in the reverse order of removal.

امداد خودرو فارما
تلفن شبانه روزی: ۰۲۱-۸۸۸۶۲۰۸۵
FarmaSOS.com

CHANGED BY	
EFFECTIVE DATE	
AFFECTED VIN	



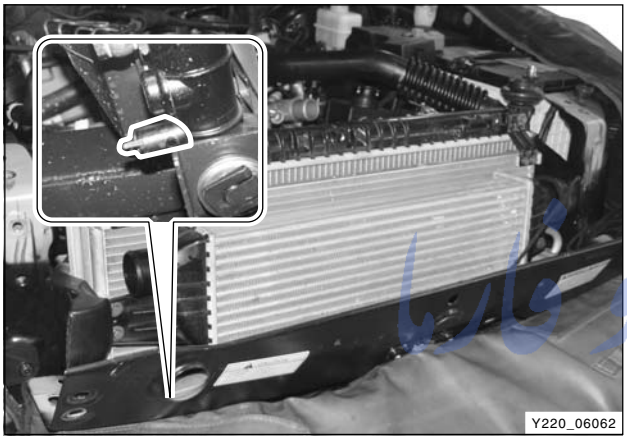

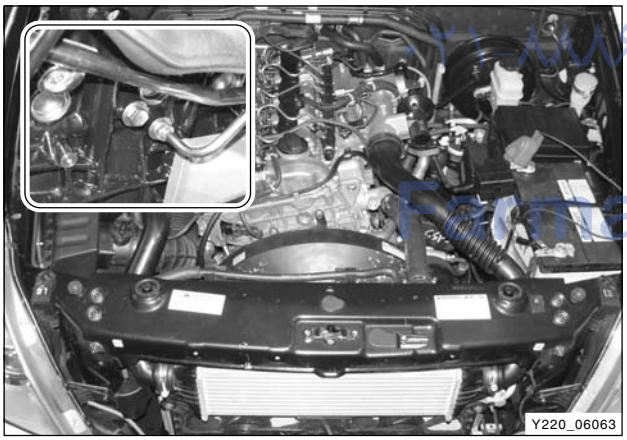

Draining and Adding of Coolant

1. Release the pressure from coolant reservoir by loosening one notch of coolant reservoir cap, and then remove the cap.

   Notice

   Scalding hot coolant and steam could be blown out under pressure, which could cause serious injury. Never remove the coolant reservoir cap when the before the temperature goes down below 90°C.

2. Loosen the drain plug in bottom of radiator and drain the coolant.

   Notice

   Collect the drained coolant with a proper container.

3. Remove the drain plug (1) and seal (2) in the cylinder block and drain the coolant.
4. Replace the seal with new one and install the drain plug.

   Installation Notice

Tightening torque	30 Nm

5. Install the drain plug in bottom of radiator.
6. Add the coolant through the coolant reservoir.

   Notice

   - ***Keep the coolant mixture ratio of 50:50 (water : anti-freezer).***
   - ***Add the coolant until the water flows out through the overflow hose.***

7. Warm up the engine until the thermostat begins to open and check if the coolant level is at “FULL” mark on the reservoir. Add if necessary.

امداد خودرو فارسا
FarsaSOS.com

PREHEATING SYSTEM

ECU



Glow indicator (meter cluster)



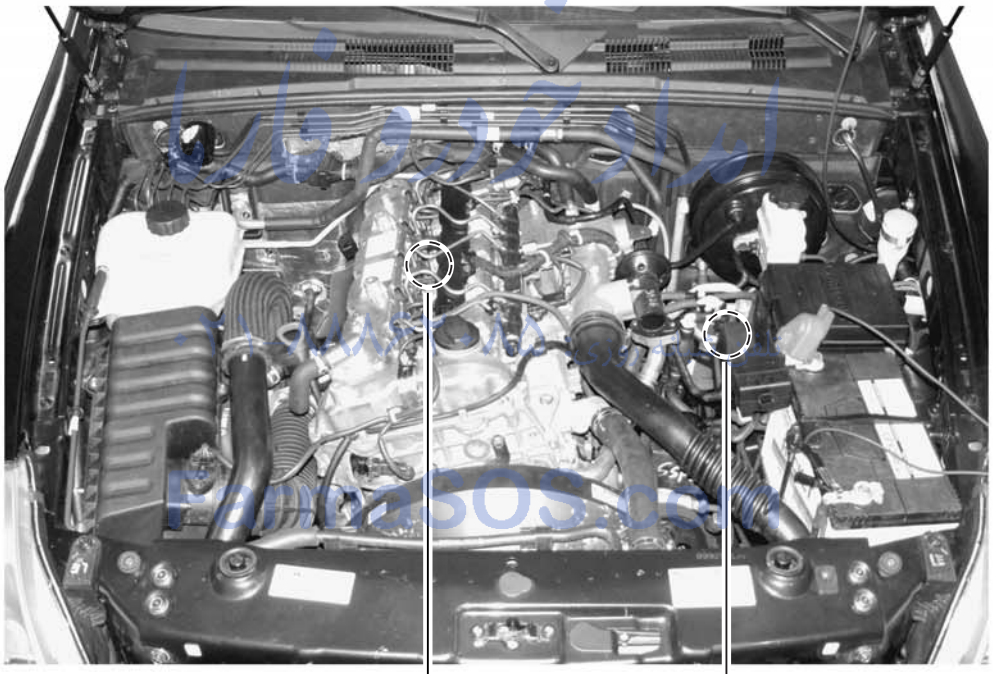

Glow plug

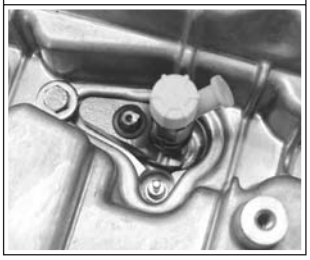

Preheating relay



Y220_06068

CHANGED BY	
EFFECTIVE DATE	
AFFECTED VIN	

OVERVIEW

Glow plug is installed on the cylinder head (combustion chamber) in the D27DT preheating control unit system. Cold starting performance has improved and exhaust gas during cold starting has reduced.

ECU receives coolant temperature and engine speed to control; after monitoring the engine preheating/after heating and glow plug diagnosis function, the fault contents will be delivered to ECU.

- Engine preheating/after heating functions
- Preheating relay activation by ECU controls
  - Senses engine temperature and controls the preheating/after heating time
  - Glow indicator
- K-LINE for information exchanges between preheating unit and ECU
  - Transmits preheating unit self-diagnosis results to ECU
  - Transmits glow plug diagnosis results and operating status to ECU

PREHEATING RELAY

▶ Structure

امداد خودرو فارما
تلفن شبانه روزی: ۰۲۱-۸۸۸۶۲۰۸۵
FarmaSOS.com

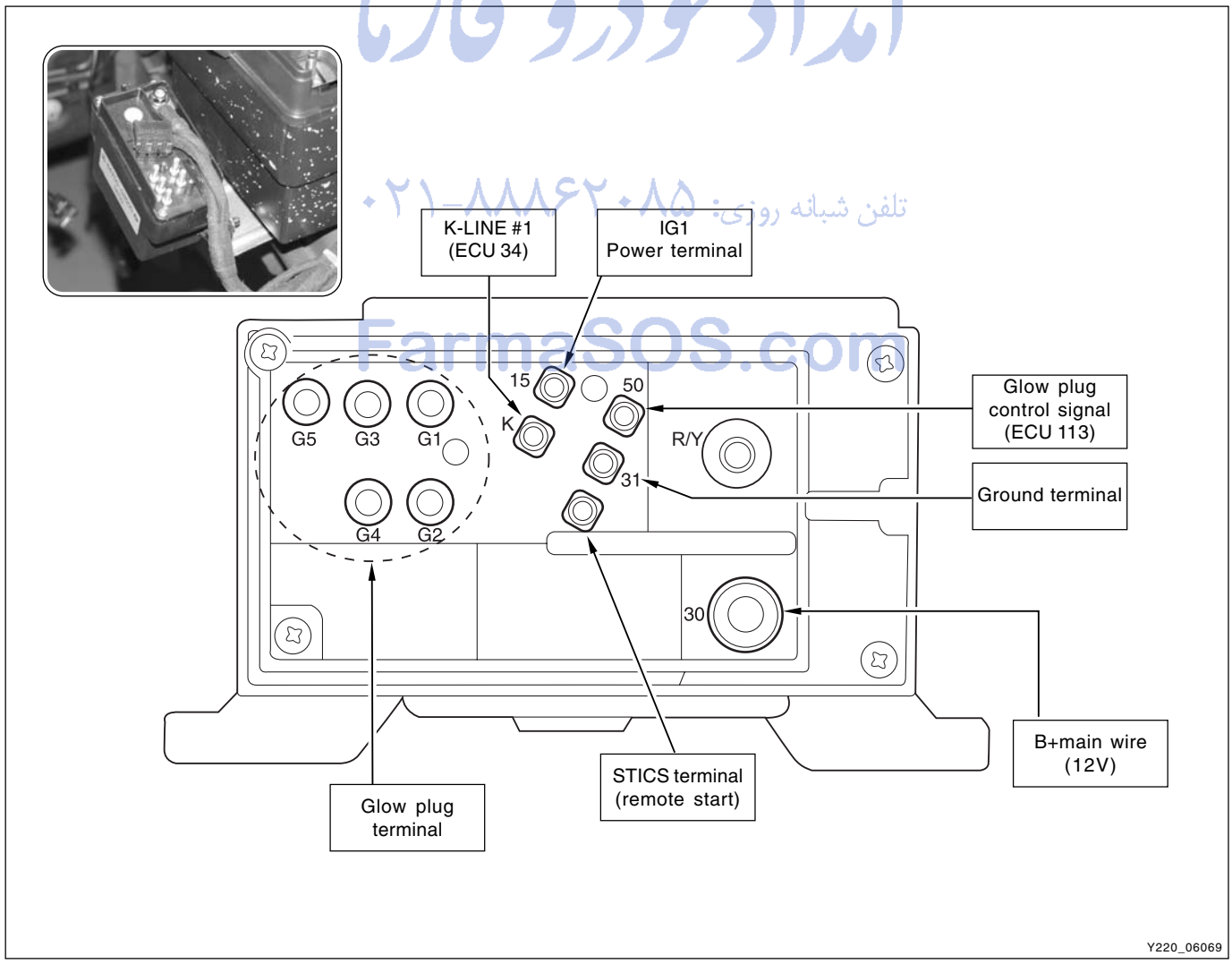

PREHEATING SYSTEM DIAGRAM

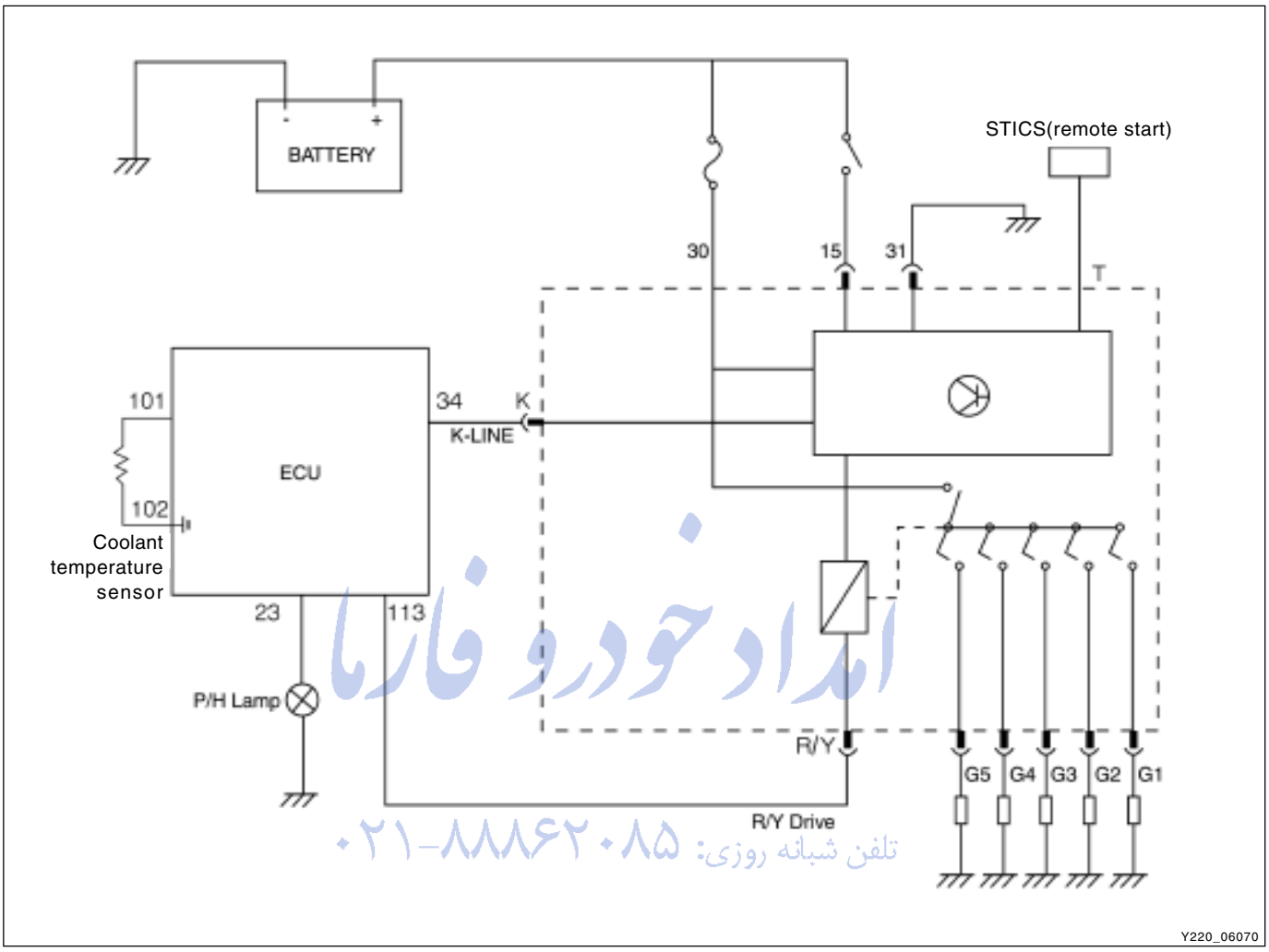

امداد خودرو فارما
تلفن شبانه روزی: ۰۲۱-۸۸۸۶۲۰۸۵
FarmaSOS.com

▶ Specifications

Description	Specification
Rated voltage	DC 12 V
Operating voltage range	DC 8 ~ 15 V
Operating range	- 40 ~ + 100°C
Relay operating voltage	Over 6.5 V
Relay releasing voltage	Over 1.5 V
Relay coil resistance	11.3 Ω
Voltage drop	Below 150 mV at each glow plug (at 16A of current)
Parasitic current	MAX 1mA

CHANGED BY	
EFFECTIVE DATE	
AFFECTED VIN	

▶ Function

Preheating system controls and checks following functions and operating conditions.

Pre-Heating

- The power will be supplied to the glow plugs by ECU controls when the power is supplied to the IG terminal from the battery and there are normal communications with ECU within 2 seconds. The surface of glow plug will be heated up to 850°C very quickly to aid combustion by vaporizing air-fuel mixture during compression stroke.
- Preheating time is controlled by ECU.

After-heating

- When the engine is started, after-heating starts by ECU controls. The idle rpm will be increased to reduce toxic smoke, pollutants and noises.
- After-heating time is controlled by ECU.

Checking glow plugs

- Check each glow plug for short in circuit
- Check each glow plug for open in circuit due to overvoltage
- Check glow plug for short to ground

Forceful relay shut-down

- When glow plug is shorted to ground

K-Line communication

- ECU sends the results to preheating time control relay through K-Line to start communication.
- Preheating time control relay sends messages including self-diagnosis data for glow plugs to ECU.
- Glow plug makes communication only as response to demand.
- When power is supplied, ECU starts self-diagnosis within 2 seconds.
- Under the following conditions, communication error occurs.
  - When there is no response from glow plug module within 2 seconds
  - When an error is detected in checksum
  - Less byte is received

Error code of “P1720 - Pre heating control communication fail” will be reported.

ایراد خودرو فارما
تلفن شبانه روزی: ۰۲۱ ۸۸۸۴۲۰۸۵
FarmaSOS.com

Operating time

Pre-heating	Coolant Temp.	-35 °C	-25 °C	-20 °C	-10 °C	0 °C	10 °C	20 °C
	Operating Time	31 sec	22 sec	19 sec	17 sec	14 sec	0 sec	0 sec
	Operating Conditions	• IG: “ON” • B+ : below 15.2V			Release Conditions	• After operating time elapsed • IG: “OFF” • When engine cranking		
After-heating	Coolant Temp.	-30 °C	-20 °C	-10 °C	0 °C	10 °C	20 °C	35 °C
	Operating Time	115 sec	80 sec	30 sec	19 sec	11 sec	11 sec	0 sec
	Operating Conditions	• After engine starting			Release Conditions	• After operating time elapsed • Torque : 190/170 Nm • Speed: 2100/2050 rpm		
Glow Indicator	Coolant Temp.	-30 °C	-25 °C	-20 °C	-10 °C	0 °C	10 °C	20 °C
	Operating Time	18 sec	16 sec	10 sec	5 sec	2 sec	0 sec	0 sec
	Operating Conditions	• IG: “ON”			Release Conditions	• When engine cranking		

SECTION DI07

FUEL SYSTEM

امداد خودرو فارما

تلفن شبانه روزی: ۰۲۱-۸۸۸۶۲۰۸۵

FarmaSOS.com

SECTION DI07

FUEL SYSTEM

Table of Contents

CAUTIONS FOR DI ENGINE DI07-3

FUEL SYSTEM DI07-6

Fuel injection system DI07-6
Fuel transfer line DI07-12
Inlet metering valve (IMV) DI07-14
High fuel pressure line DI07-17
Injector DI07-48

ایران خودرو فارما
تلفن شبانه روزی: ۰۲۱-۸۸۸۶۲۰۸۵
FarmaSOS.com

CHANGED BY	
EFFECTIVE DATE	
AFFECTED VIN	

امداد خودرو فارما

تلفن شبانه روزی: ۸۸۸۶۲۰۸۵-۰۲۱

FarmaSOS.com

CAUTIONS FOR DI ENGINE

This chapter describes the cautions for DI engine equipped vehicle. This includes the water separation from engine, warning lights, symptoms when engine malfunctioning, causes and actions.

▶ DI Engine

Comparatively conventional diesel engines, DI engine controls the fuel injection and timing electrically, delivers high power and reduces less emission.

▶ System Safety Mode

When a severe failure has been occurred in a vehicle, the system safety mode is activated to protect the system. It reduces the driving force, restricts the engine speed (rpm) and stops engine operation. Refer to “Diagnosis” section in this manual.

▶ Water Separator Warning Light

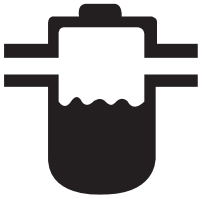

When the water level inside water separator in fuel filter exceeds a certain level (approx. 39 cc), this warning light comes on and buzzer sounds.

Also, the driving force of the vehicle decreases (torque reduction). If these conditions occur, immediately drain the water from fuel filter.

For the draining procedures, please refer to “How to drain the water from fuel filter” section.

امداد خودرو فارما
تلفن شبانه روزی: ۰۲۱-۸۸۸۶۲۰۸۵
FarmaSOS.com

CHANGED BY	
EFFECTIVE DATE	
AFFECTED VIN	

▶ Priming Pump

The priming pump installed in fuel pump is the device to fill the fuel into the fuel filter. When the vehicle is under the conditions as below, press the priming pump until it becomes rigid before starting the engine.

WARNING

Never reverse filter or use it in other place (clean side)

▶ Conditions for using Priming Pump

1. **After run out of fuel**
2. **After draining the water from fuel separator**
3. **After replacing filter or any intervention on system**

▶ Fuel Filter and Water Separator

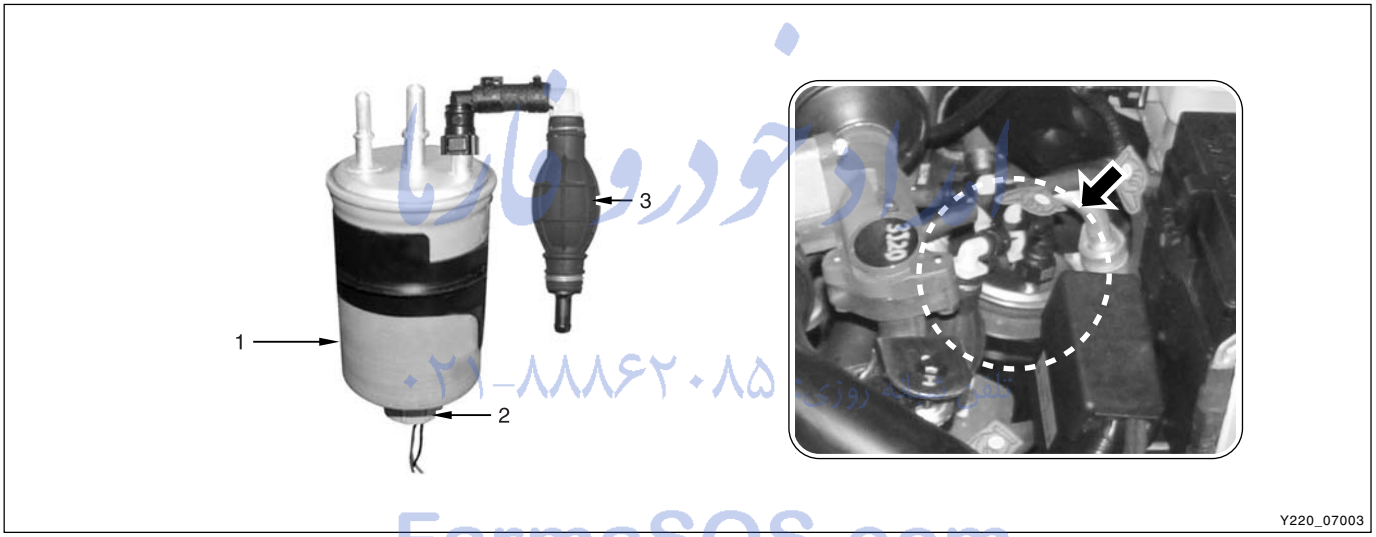

FarmaSOS.com

1. Fuel filter
2. Water drain plug
   (to be drained every 15,000km max.)
   Draining could be done at same time than oil change
3. Priming pump

Notice

- ***When replaced the fuel filter or drained the water from fuel filter, press the priming pump until it becomes rigid before starting the engine.***
- ***The water drain from fuel filter should be performed whenever changing the engine oil.***

▶ Draining the Water From Fuel Filter

1. Place the water container under the fuel filter.



2. Turn the drain plug (2) to “A” direction to drain the water.
3. Press priming pump until all water is drained, then turn the drain plug to “B” direction to tighten it.

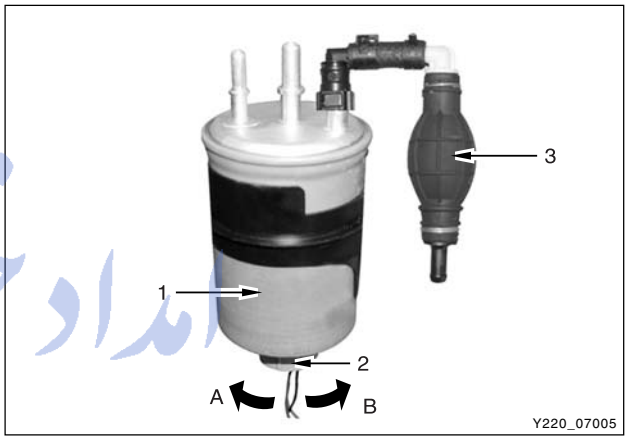

Notice

Be careful not to be injured by surrounding equipment during the working procedures.

4. Press the priming pump until it becomes rigid.
5. Start the engine and check the conditions.
6. Clear the fault code of ECU with scan 100.

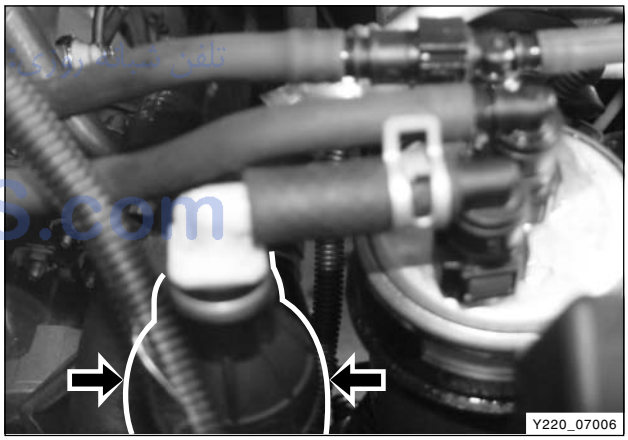

WARNING

If the priming pump is not properly operated, air may get into the fuel line. It may cause starting problem or fuel system problem. Make sure to perform the job in step 4.

امداد خودرو فارما
FarmaSOS.com

CHANGED BY	
EFFECTIVE DATE	
AFFECTED VIN	

FUEL SYSTEM

FUEL INJECTION SYSTEM

▶ Electronic Control of Fuel System

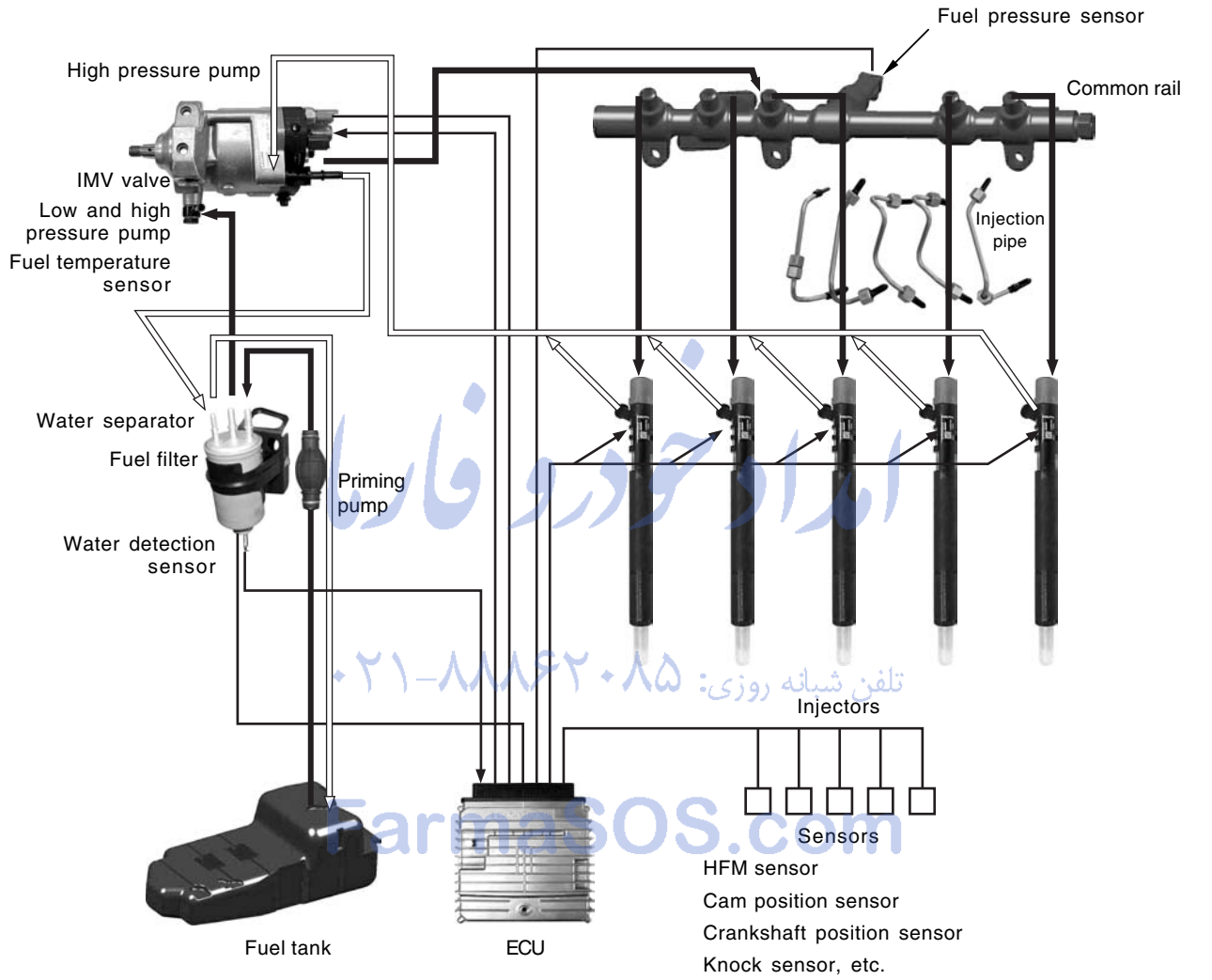

FarmSOS.com
تلفن شبانه روزی: ۰۲۱-۸۸۸۶۲۰۸۵

According to input signals from various sensors, engine ECU calculates driver's demand (position of the accelerator pedal) and then controls overall operating performance of engine and vehicle on that time.

ECU receives signals from sensors via data line and then performs effective engine air-fuel ratio controls based on those signals. Engine speed is measured by crankshaft speed (position) sensor and camshaft speed (position) sensor determines injection order and ECU detects driver's pedal position (driver's demand) through electrical signal that is generated by variable resistance changes in accelerator pedal sensor. Air flow (hot film) sensor detects intake air volume and sends the signals to ECU. Especially, the engine ECU controls the air-fuel ratio by recognizing instant air volume changes from air flow sensor to decrease the emissions (EGR valve control). Furthermore, ECU uses signals from coolant temperature sensor and air temperature sensor, booster pressure sensor and atmospheric pressure sensor as compensation signal to respond to injection starting, pilot injection set values, various operations and variables.

▶ Composition of Fuel System

Components in fuel system are designed to generate and distribute high pressure, and they are controlled electronically by engine ECU. Accordingly, fuel system is completely different from injection pump type fuel supply system on the conventional Diesel engine. The fuel injection system in common rail engine is composed of transfer pressure section that transfers fuel in low pressure, high pressure section that transfers fuel in high pressure and ECU control section.

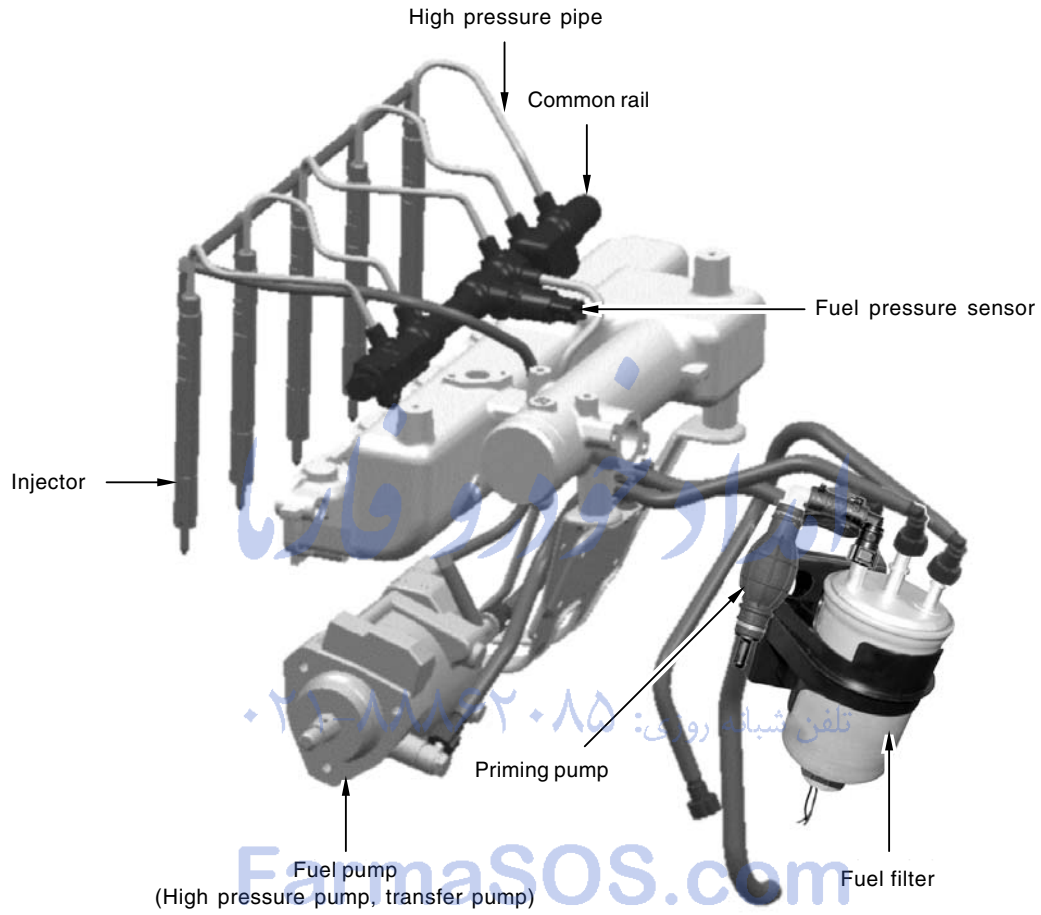

<Fuel line system>

Y220_07008

Fuel route

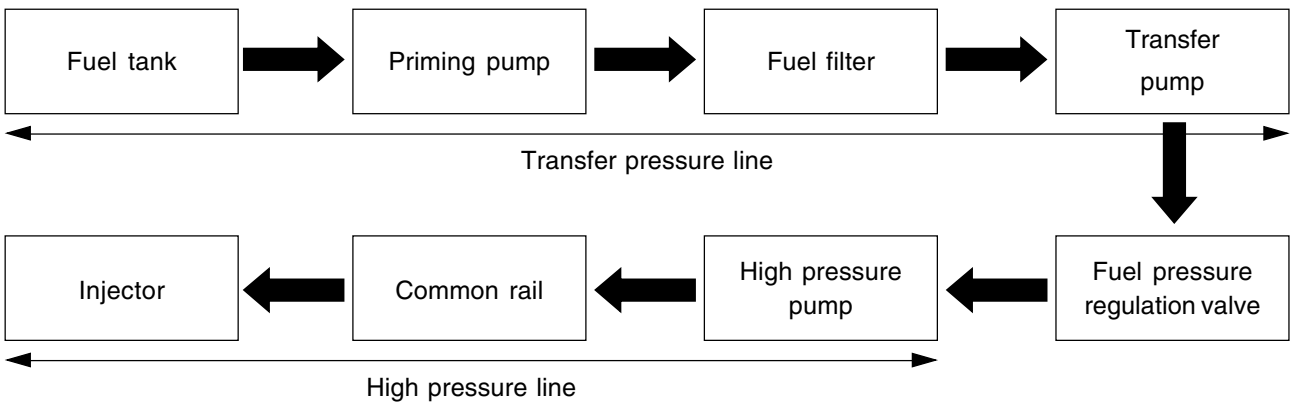

CHANGED BY	
EFFECTIVE DATE	
AFFECTED VIN	

▶ Hydraulic cycle in Fuel Line (Transfer and High Pressure Line)

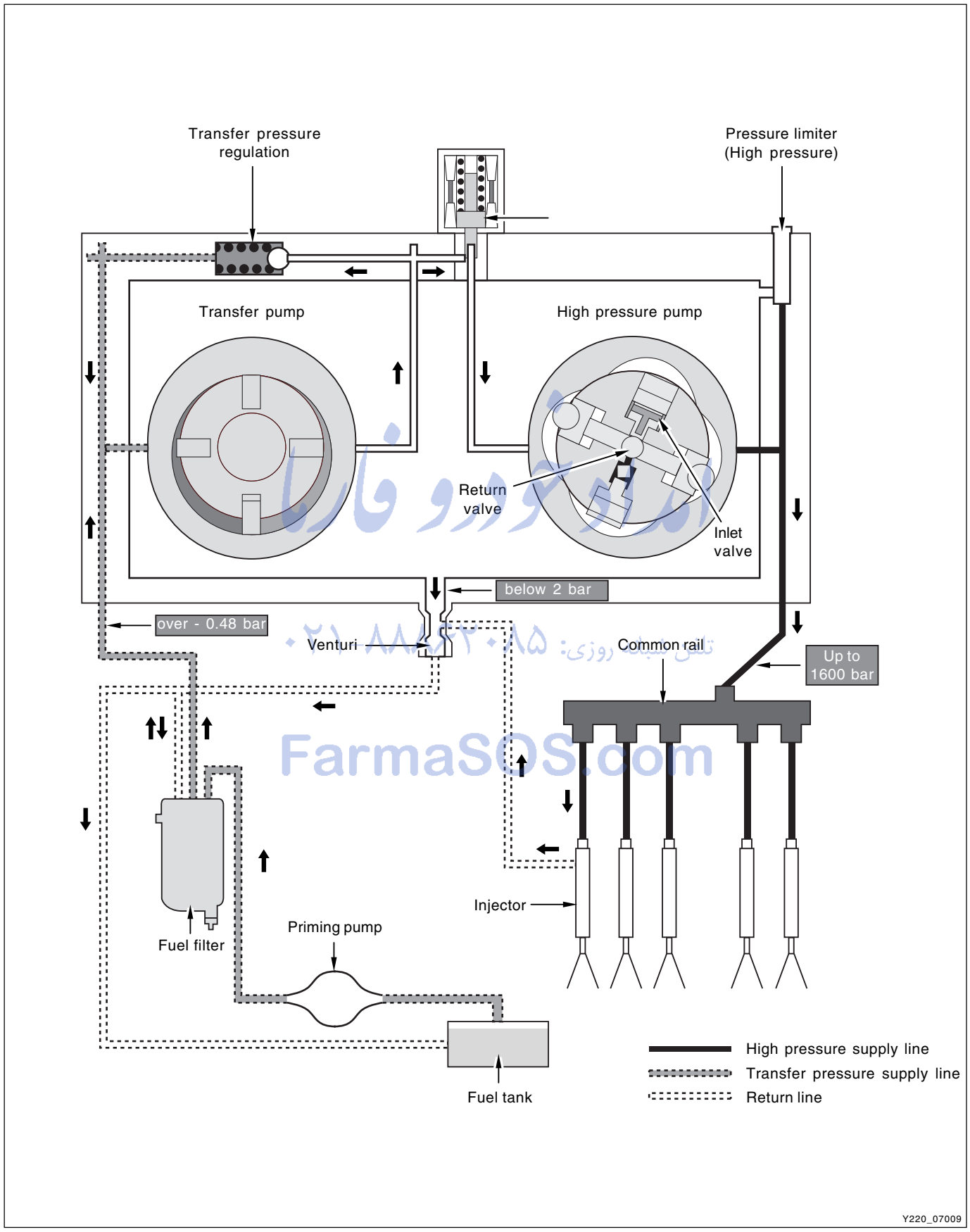

FarmaSOS.com

▶ Components of Low Pressure Transfer Line

Low pressure stage is to supply sufficient fuel to high pressure section and components are as below.

- Fuel tank (including strainer)
- Hand priming pump
- Fuel filter
- Transfer pump
- Other low pressure fuel hoses

Fuel tank

Fuel tank is made of anti-corrosion material and its allowable pressure is 2 times of operating pressure (more than 0.3 bar). It has protective cap and safety valve to prevent excessive pressure building. Also, it has structure to prevent fuel from leaking in shocks, slopes and corners and to supply fuel smoothly.

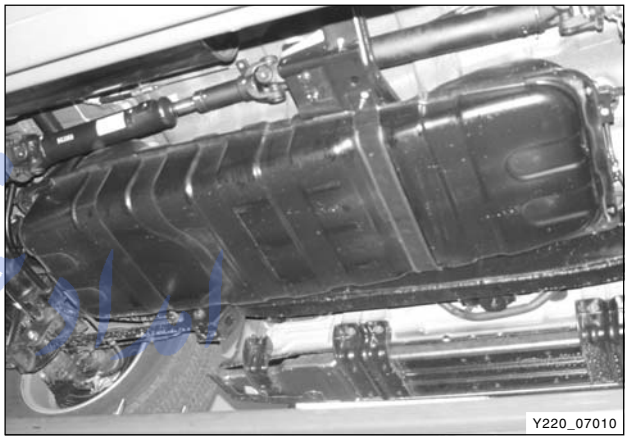
Y220_07010

Priming pump

If fuel runs out during driving or air gets into fuel line after fuel filter replacement, it may cause poor engine starting or damage to each component. Therefore, the hand priming pump is installed to bleed air from transfer line.

When the vehicle is under the conditions as below, press the priming pump until it becomes rigid before starting the engine.

- After run out of fuel
- After draining the water from fuel filter
- After replacing the fuel filter

Press the priming pump until it becomes rigid before starting the engine.

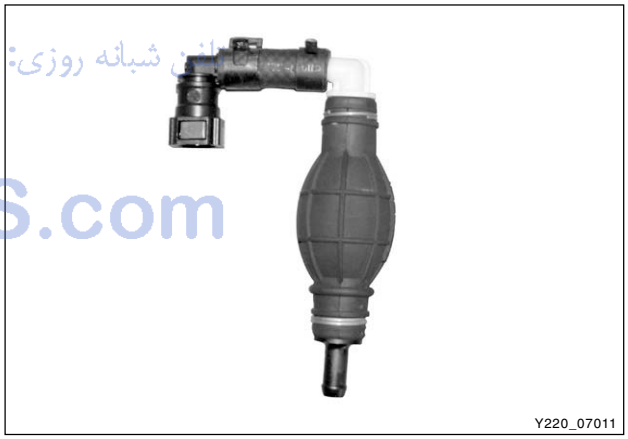
Y220_07011

Fuel filter

It requires more purified fuel supply than conventional diesel engine. If there are foreign materials in the fuel, fuel system including pump components, delivery valve and injector nozzles may be damaged.

Fuel filter purifies fuel before it reaches to high pressure pump to help proper operations in high pressure pump. And more, it separates water from fuel to prevent water from getting into FIE system (high pressure line).


Y220_07012

امداد خودرو فارما
FarmaSOS.com

CHANGED BY	
EFFECTIVE DATE	
AFFECTED VIN	

▶ Components of High Pressure Transfer Line

In the high pressure section, sufficient fuel pressure that injectors requires will be generated and stored. The components are as below:

- High pressure pump
- Rail pressure sensor
- Pressure limit valve
- Common rail
- High pressure pipe
- Injector
- Fuel pressure regulating valve (IMV)

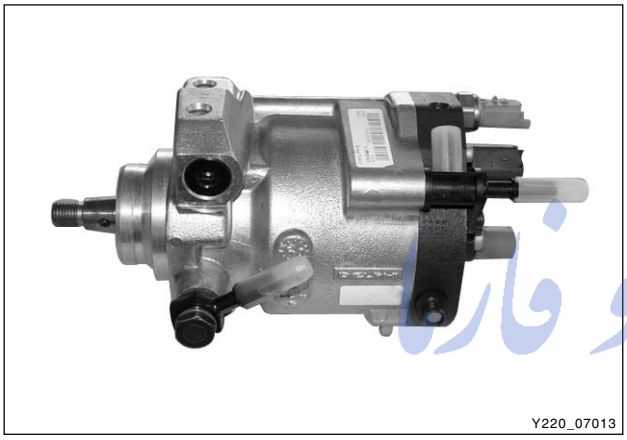

High pressure pump (including IMV and limit valve)

This is plunger pump that generates high pressure; and driven by crankshaft with timing chain. The high pressure pump increases system pressure of fuel to approx. 1,600 bar and this compressed fuel is transferred to high pressure accumulator (common rail) in tube through high pressure line.

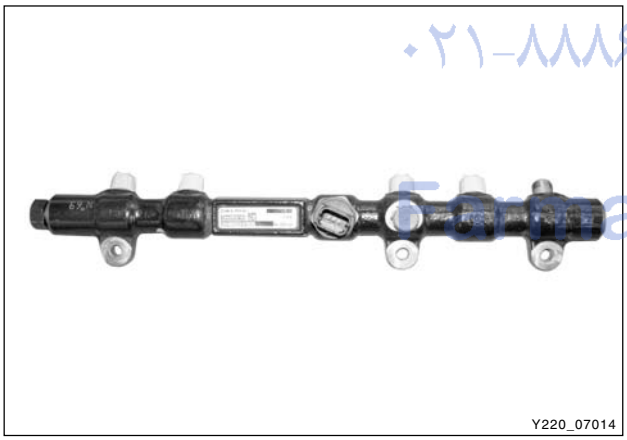

Common rail (including pressure sensor)

It stores fuel transferred from high pressure pump and also stores actual high pressure of fuel. Even though the injectors inject fuel from the rail, the fuel pressure in the rail is maintained to a specific value. It is because the effect of accumulator is increased by unique elasticity of fuel. Fuel pressure is measured by rail pressure sensor. And the inlet metering valve (IMV) included in high pressure pump housing keeps pressure to a desired level.

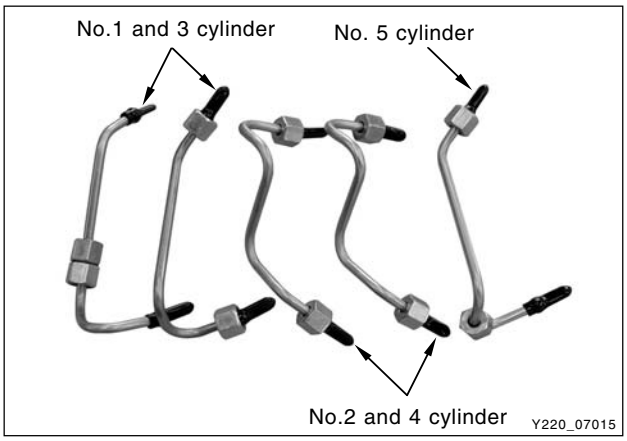

High pressure pipe (fuel pipe)

Fuel line transfers high pressure fuel. Accordingly, it is made of steel to endure intermittent high frequency pressure changes that occur under maximum system pressure and injection stops. Injection lines between rail and injectors are all in the same length; it means the lengths between the rail and each injector are the same and the differences in length are compensated by each bending.

امداد خودرو فارما
۰۲۱-۸۸۴۶۲۰۸۵
FarmaSOS.com

Injectors

The fuel injection device is composed of electrical solenoid valve, needle and nozzle and controlled by engine ECU. The injector nozzle opens when solenoid valve is activated to directly inject the fuel into combustion chamber in engine. When injector nozzle is open, remaining fuel after injection returns to fuel tank through return line.



Transfer pump

The transfer pump is included in the housing of the high pressure pump. The transfer pump is the volumetric blade type pump. To deliver the continuously required fuel volume, the pump transfers fuel from the fuel tank to high pressure pump.

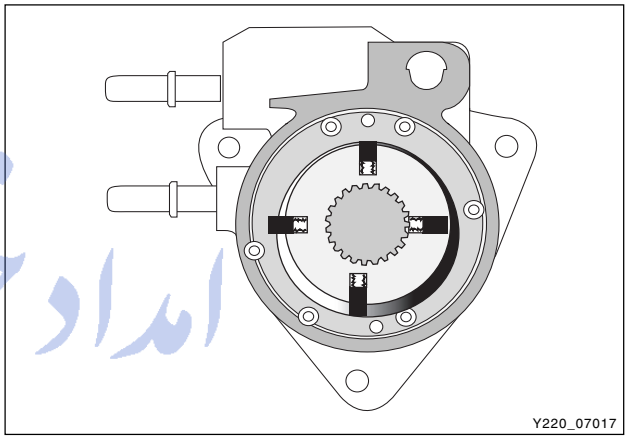

امداد خودرو فارما
تلفن شبانه روزی: ۰۲۱ ۸۸۸۶۲۰۸۵
FarmaSOS.com

Fuel Filter Replacement

* Fuel filter change interval: every 30,000 km
* Water separation interval: every 15,000 km max. (same with engine oil change interval)
* Never reuse the removed fuel filter

CHANGED BY	
EFFECTIVE DATE	
AFFECTED VIN	

FUEL TRANSFER LINE

▶ Transfer Pump

Description

The transfer pump is the device to provide sufficient fuel to high fuel pressure line and is mechanical type feed pump that is driven by timing chain linked to crankshaft. This mechanical type feed pump is subject to air inflow, therefore, a hand priming pump is installed to fill fuel in Low fuel pressure(LP) circuit.

The transfer pump is included in the housing of the HP pump. The transfer pump is the volumetric blade type pump and consists of the following components:

- A rotor turned by the shaft of the HP pump. The connection is provided by splines.
- An eccentric liner fixed to the housing of the HP pump by 6 Torx bolts. The liner is positioned by two off-set pins in order to prevent any assembly errors.
- Four blades set at 90°. Each blade is held against the liner by a coil spring.
- The inlet and outlet orifice.

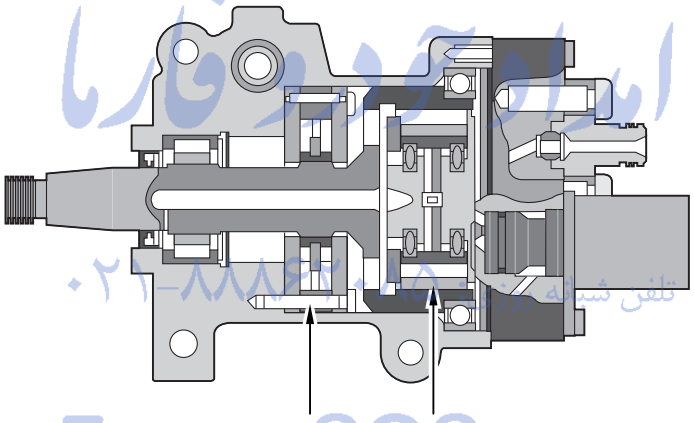

<Sectional view of fuel pump>

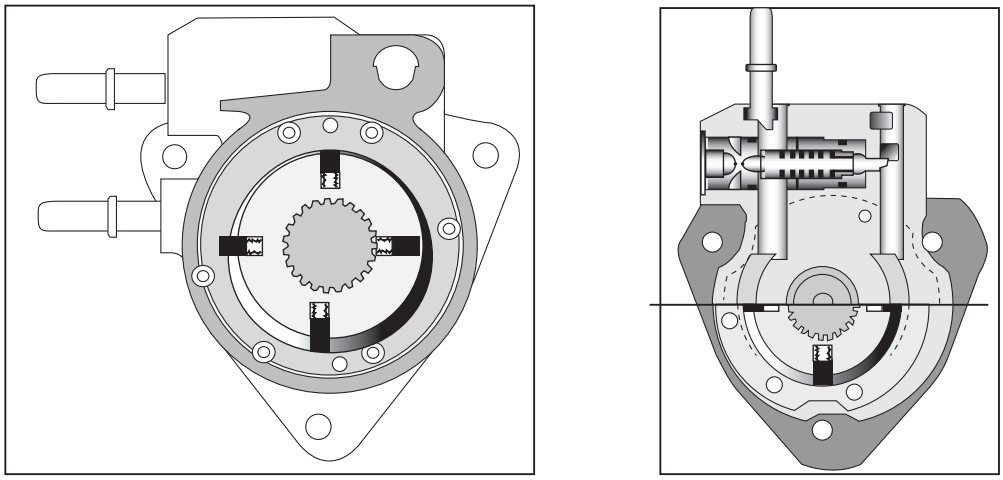

<Sectional view of transfer pump>

Y220_07018

FarmaSOS.com

Principle of operation

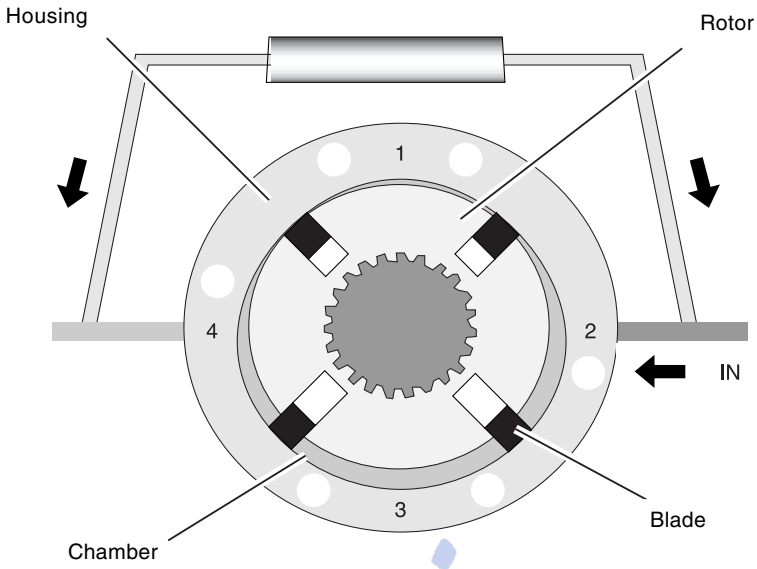

Consider the chamber between the rotor, the liner and two successive blades (refer to above figure).

- When the chamber is in position 1, the volume of the chamber is minimal. The changes in volume according to the angle of rotation of the rotor are small.
- The rotor makes a quarter turn clockwise. The previous chamber is now in position 2.

  The inlet orifice is uncovered. The volume contained in the chamber quickly rises. The pressure inside the chamber drops sharply. Fuel is drawn into the chamber.
- The rotor continues to rotate. It is now in position 3. The inlet and outlet orifices are now sealed off. The volume area controlled by the rotor, the liner and the two blades is at the maximum. The changes in volume according to the angle of rotation of the rotor are small.
- The rotor continues to rotate. It is finally in position 4. The outlet orifice is uncovered. The volume area controlled by the rotor, the liner and the blades decreases quickly. The pressure inside the chamber rises sharply. The fuel is expelled under pressure. The depression caused by the transfer pump's rotation is sufficient to draw in diesel fuel through the filter. The transfer pump is driven by the shaft of the HP pump, transfer pressure thus rises with engine speed. A regulating valve allows the transfer pressure to be maintained at a practically constant level (about 6 bar) throughout the whole range of engine operations by returning some of the fuel to the pump inlet.

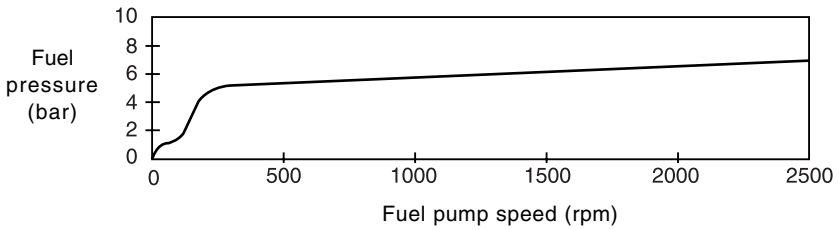

Characteristics of the transfer pump

Regulating pressure	6 bar
Volume controlled	5.6 cm^3/revolution
Flow	90 ℓ/h at 300 rpm pump
	650 ℓ/h at 2,500 rpm pump
Intake capacity	65 mbar at 100 rpm pump

CHANGED BY	
EFFECTIVE DATE	
AFFECTED VIN	

INLET METERING VALVE (IMV)



▶ Overview

The LP actuator, also called the inlet metering valve, is used to control the rail pressure by regulating the amount of fuel which is sent to the pumping element of the HP pump.

This actuator has two purposes:

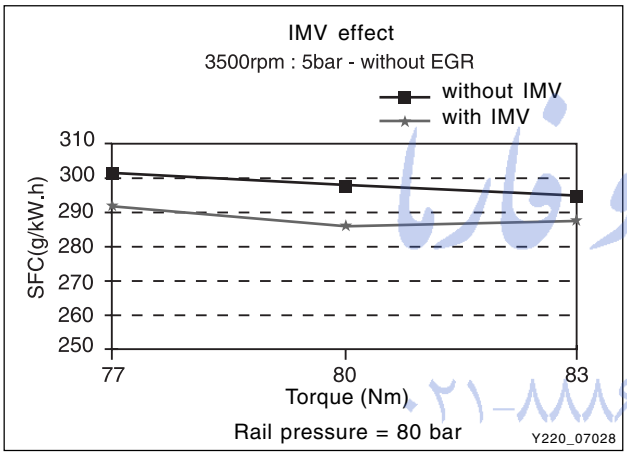

1. Firstly, it allows the efficiency of the injection system to be improved, since the HP pump only compresses the amount of fuel necessary to maintain in the rail the level of pressure required by the system as a function of the engine's operating conditions.

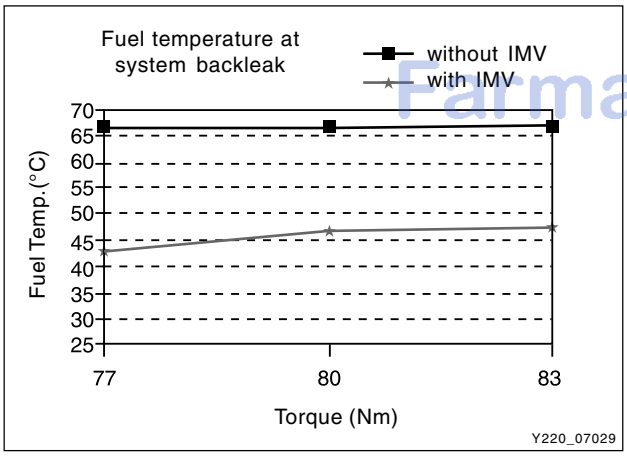

2. Secondary, it allows the temperature to be reduced in the fuel tank. When the excess fuel is discharged into the back leak circuit, the pressure reduction in the fluid (from rail pressure down to atmospheric pressure) gives off a large amount of heat. This leads to a temperature rise in the fuel entering the tank. In order to prevent too high a temperature being reached, it is necessary to limit the amount of heat generated by the fuel pressure reduction, by reducing the back leak flow. To reduce the back leak flow, it is sufficient to adapt the flow of the HP pump to the engine's requirements throughout its operating range.

امداد خودرو فارما
تلفن شبانه روزی: ۰۲۱-۸۸۸۶۲۰۸۵
FarmaSOS.com

▶ Composition of IMV

The IMV is located on the hydraulic head of the pump. It is fed with fuel by the transfer pump via two radial holes. A cylindrical filter is fitted over the feed orifices of the IMV. This makes it possible to protect not only the LP actuator, but also all the components of the injection system located downstream of the IMV.

The IMV consists of the following components:

- A piston held in the fully open position by a spring.
- A piston filter located at inlet.
- Two O-rings ensuring pressure tightness between the hydraulic head and the body of the IMV.
- A body provided with two radial inlet holes and an axial outlet hole.
- Coil

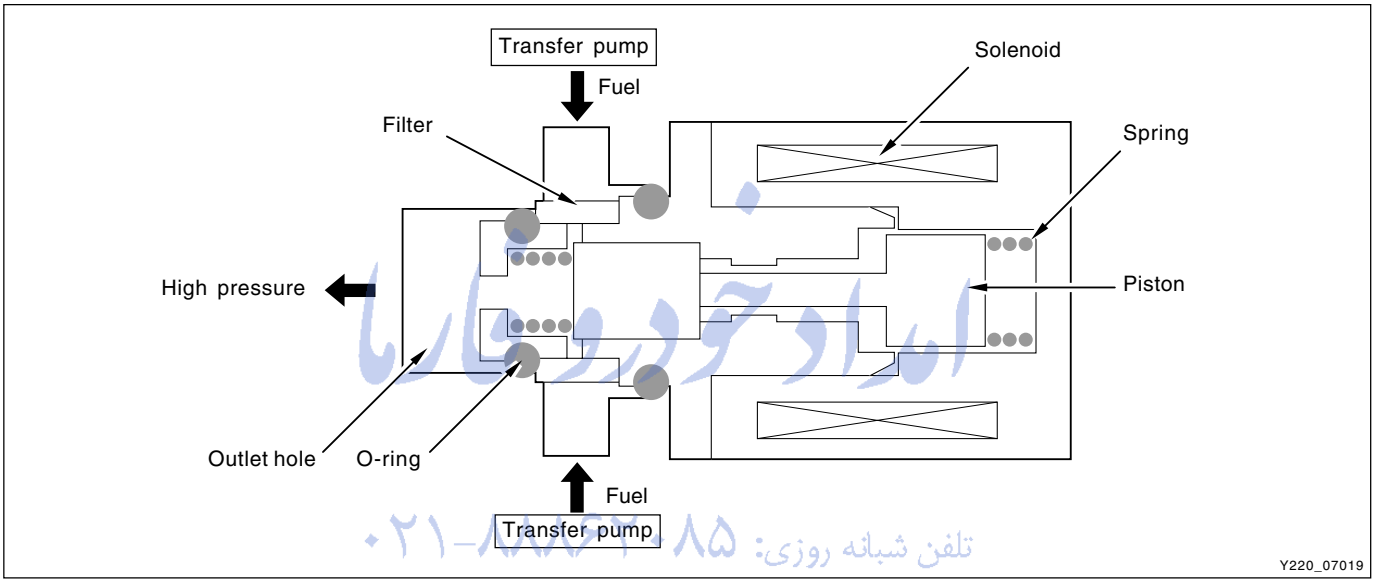

FarmaSOS.com

CHANGED BY	
EFFECTIVE DATE	
AFFECTED VIN	

▶ Principle of Operation

The LP actuator is used to proportion the amount of fuel sent to the pumping element of the HP pump in such a way that the pressure measured by the HP sensor is equal to the pressure demand sent out by the ECU. At each point of operation, it is necessary to have:

- Flow introduced into the HP pump = Injected flow + Injector backleak flow + injector control flow

The IMV is normally open when it is not being supplied with fuel. It cannot therefore be used as a safety device to shut down the engine if required.

The IMV is controlled by current. The flow/current law is represented below.

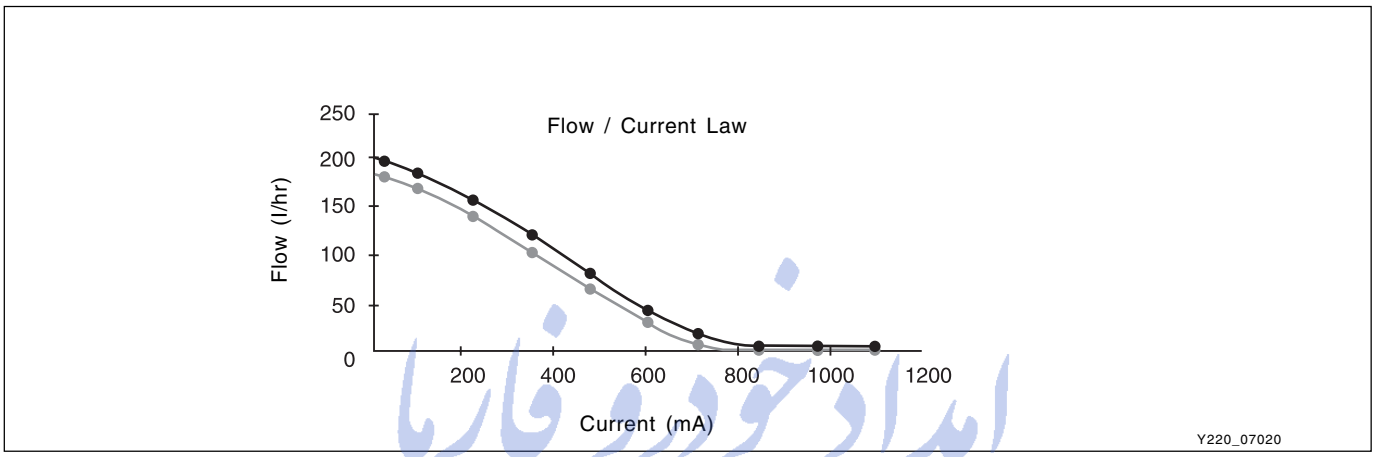

Specifications

Piston stroke	1.4 mm
Diameter of holes	3.4 mm
Coil resistance	5.4 Ω (at 25°C)
Power supply	Battery voltage (It is prohibited to supply the IMV directly at the battery voltage during the diagnostic test)
Max. current	1 A
Weight	260 g
Operating temperature	40°C < T < 125°C
Fluid temperature	40°C < T < 90°C
Control logic	Normally open without power (The flow decreases as the current rises).

- ECU determines the value of the current to be sent to the IMV according to:

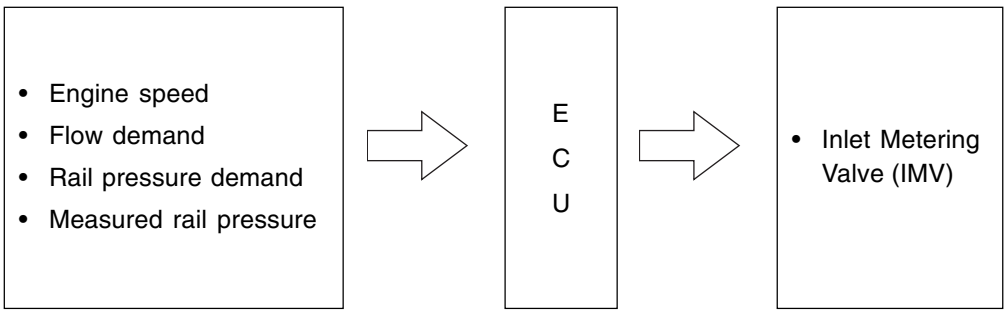

امداد خودرو فارما
تلفن شبانه روزی: ۰۲۱-۸۸۸۶۲۰۸۵
FarmaSOS.com

HIGH FUEL PRESSURE LINE

▶ High Pressure Pump

Description

This pump generates high fuel pressure and is driven by timing chain (radial plunger principle). This pump pressurizes the fuel to approx. 1600 bar and sends this high pressurized fuel to high pressure accumulator (common rail) via high pressure line.

It is possible to extend the pumping phase in order to considerably reduce drive torque, vibration and noise since the pump no longer determines the injection period. The differences from conventional rotary pumps lies in the fact that it is no longer the hydraulic head rotor which turns inside the cam, but the cam which turns around the hydraulic head. Thus, any problems of dynamic pressure tightness are eliminated because the high pressure is generated in the fixed part of the pump.

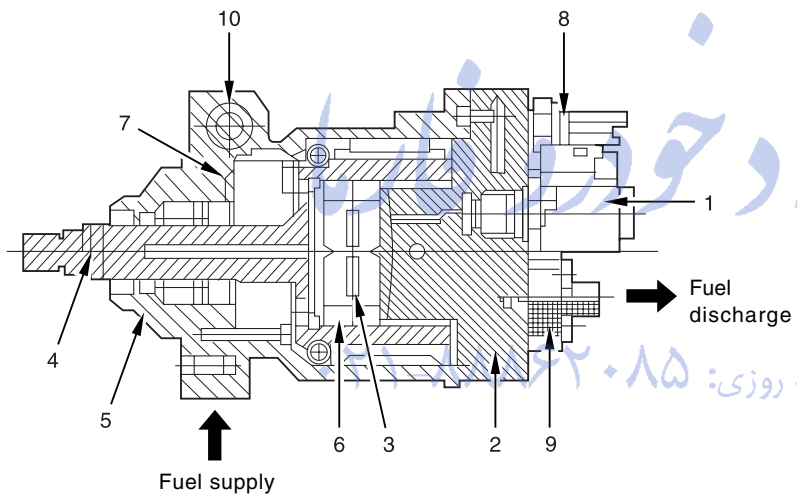

1. IMV (Inlet Metering Valve)
2. Hydraulic Head
3. Plunger
4. Drive shaft and cam ring
5. Housing
6. Roller and shoe
7. Transfer pump
8. Fuel temperature sensor
9. High fuel pressure - OUT
10. Pressure regulator

ایران خودرو
تلفن شبانه روزی: ۰۸۵۲۲۲۲۲۲۲۱
FarmaSOS.com

Y220_07021

Specifications

- Maximum operating pressure: 1600 ± 150 bar
- Max. Overpressure: 2100 bar
- Maximum sealing pressure: when using a plug instead of PRV, no leaks around pump outlet port (when applying 2500 bar of constant pressure)
- Operating temperature: Continuously operating within temperature range of -30°C ~ 120°C in engine compartment
- Inflowing fuel temperature: The maximum inflowing fuel temperature is 85°C (continuously able to operate)
- Pump inlet pressure: Relative pressure Min. - 0.48 bar (to end of filter's lifetime)
- Driving torque: 15 Nm / 1600 bar
- Gear ratio (engine: pump): 0.625
- Lubrication: - Inside lubrication (rear bearing): Fuel
  - Outside lubrication (front bearing): Engine oil

CHANGED BY	
EFFECTIVE DATE	
AFFECTED VIN	

Principle of operation

- During the filling phase, the rollers are kept in contact with the cam by means of coil springs mounted on either side of each shoe. The transfer pressure is sufficient to open the inlet valve and to move the pumping plungers apart. Thus, the dead volume between the two plungers fills with fuel.
- When the diametrically opposite rollers simultaneously encounter the leading edge of the cam, the plungers are pushed towards each other.
- As soon as the pressure becomes higher than the transfer pressure, the inlet valve closes. When the pressure becomes higher than the pressure inside the rail, the delivery valve opens. Consequently, the fuel is pumped under pressure into the rail.
- During the input phase, transfer pressure pushes back the inlet valve. Fuel enters the body of the pumping element. The valve closes as soon as the pressure in the pumping element becomes higher than the transfer pressure.
- During the input phase, the ball of the delivery valve is subject to the rail pressure on its outer face and to the transfer pressure on its inner face. Thus the ball rests on its seat, ensuring the pressure tightness of the body of the pumping element. When the pressure in the element becomes higher than the pressure in the rail, the ball is unbalanced and it opens. Fuel is then pumped into the rail at high pressure.

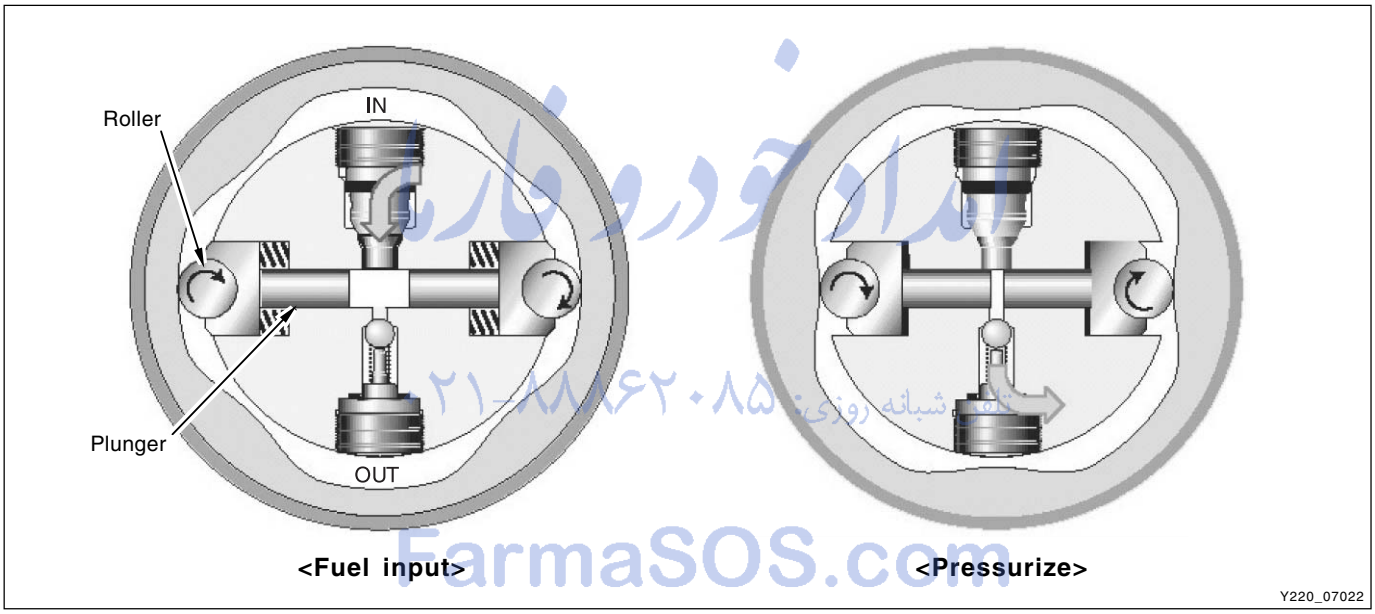

This high pressure pump generates the driving torque with low peak torque to maintain the stress to driving components. This torque is smaller than that of conventional injection pump, thus, only a small load will be applied to pump. The required power to drive pump is determined by set pressure for rail and pump speed (delivery flow). Note that the fuel leakage or defective pressure control valve may affect the engine output.

FarmaSOS.com

Inlet valve and delivery valve

During the input phase, transfer pressure pushes back the inlet valve. Fuel enters the body of the pumping element. Under the effect of the transfer pressure, the two plungers are forced apart. When the rollers simultaneously encounter the leading edge of the cam, pressure suddenly rises in the body. Of the pumping element. The valve closes as soon as the pressure in the pumping element becomes higher than the transfer pressure. During the input phase, the ball of the delivery valve is subject to the rail pressure on its outer face and to the transfer pressure on its inner face. Thus the ball rests on its seat, ensuring the pressure tightness of the body of the pumping element. When the two diametrically opposite rollers encounter the leading edges of the cam, the plungers are forced together and pressure quickly rises in the body of the pumping element. When the pressure in the element becomes higher than the pressure in the rail, the ball is unbalanced and it opens. The spring calibration is negligible compared with the pressure forces. Fuel is then pumped into the rail at high pressure.



<Inlet valve> <Delivery valve>

Y220_07023

امداد خودرو فارس
تلفن شبانه روزی: ۰۲۱-۸۸۸۶۲۰۸۵
FarmaSOS.com

Lubrication and cooling of the HP pump

Lubrication and cooling of the pump are provided by the fuel circulation. The minimum flow required to ensure adequate operation of the pump is 50 ℓ/h.

Phasing of HP pump required and offer 2 advantages

Conventional fuel injection pumps ensure pressurizing and distribution of the fuel to the different injectors. It is essential to set the pump in such a way that the injection occurs at the required place during the cycle. The HP pump of the common rail system is no longer used for the fuel distribution, it is therefore not necessary to set the pump in relation to the engine.

Nevertheless, the setting or phasing of the pump offers two advantages:

- It allows the torque variations of the camshaft and the pump to be synchronized in order to reduce the stresses on the timing belt.
- It allows pressure control to be improved by synchronizing peak pressures produced by the pump with pressure-drops caused by each injection.

This phasing allows pressure stability to be improved, which helps to reduce the difference in flow between the cylinders.

▶ HP Pump Fuel Route

The fuel passed through the fuel filter is sent to the transfer pump via the HP inlet pump. this fuel passes through the transfer pump by the transferring pressure and maintains the predefined value by the regulating valve in HP pump.

Also, this fuel gets into the IMV that controls only the fuel to the high pressure pump.

The below figure describes the pump operations when acceleration and deceleration.

When need high fuel pressure (acceleration)

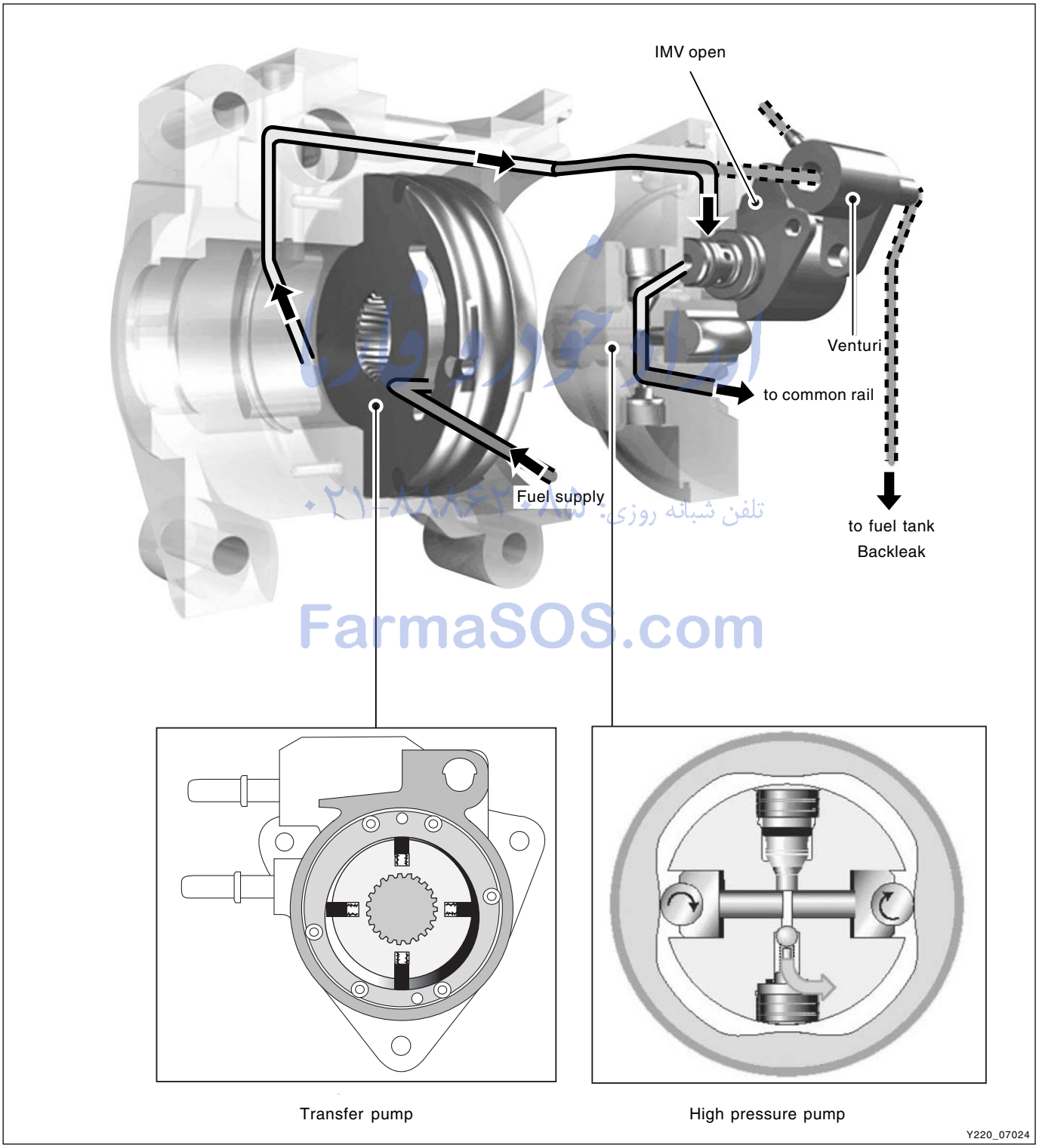

FarmaSOS.com

When do not need high fuel pressure (deceleration)

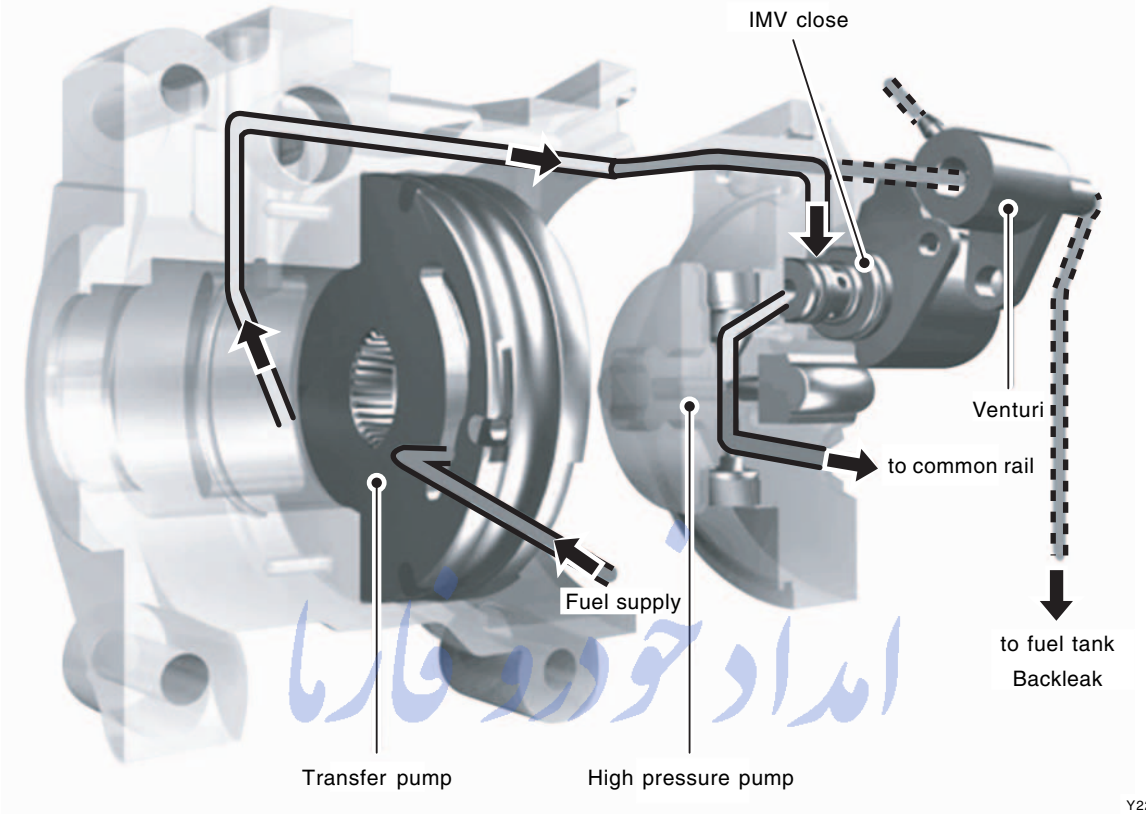

The fuel is sent to the high pressure side (hydraulic head) and compressed by the plunger. And, goes into the common rail through the high pressure pipe.

The IMV installed in the high pressure side (hydraulic head) of HP pump precisely controls the fuel amount and delivers the rail pressure feedback same as required amount.

The IMV is controlled by ECU.

FarmaSOS.com

Performance curve of HP pump

The time required to obtain a sufficient pressure in the rail to enable the engine to start depends on the volume of the system (definition of the rail, length of the pipes, etc.). The aim is to reach a pressure of 200 bars in 1.5 revolutions (3rd compression).

- Maximum operating pressure: 1600 ± 150 bar

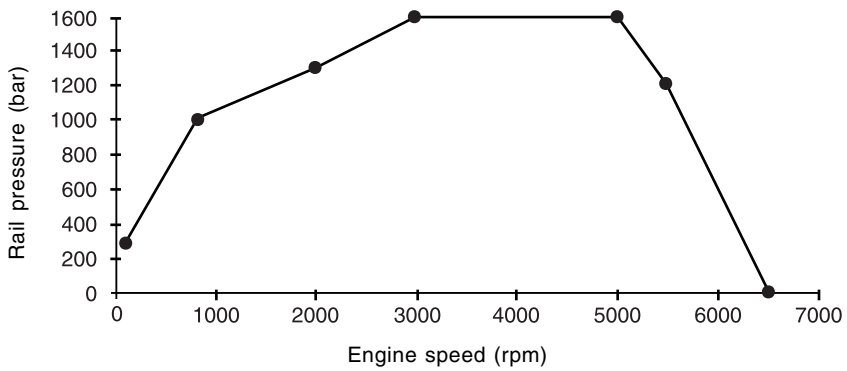

<Pressure curve of HP pump>

CHANGED BY	
EFFECTIVE DATE	
AFFECTED VIN	

▶ Sectional View of HP Pump

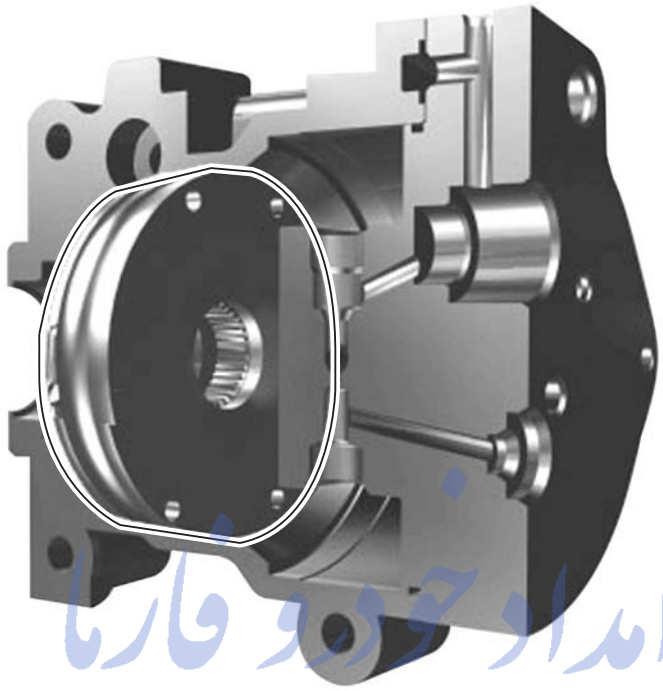

<Transfer Pump>

Y220_07032

امداد خودرو فارما
تلفن شبانه روزی: ۰۲۱-۸۸۸۶۲۰۸۵
FarmaSOS.com

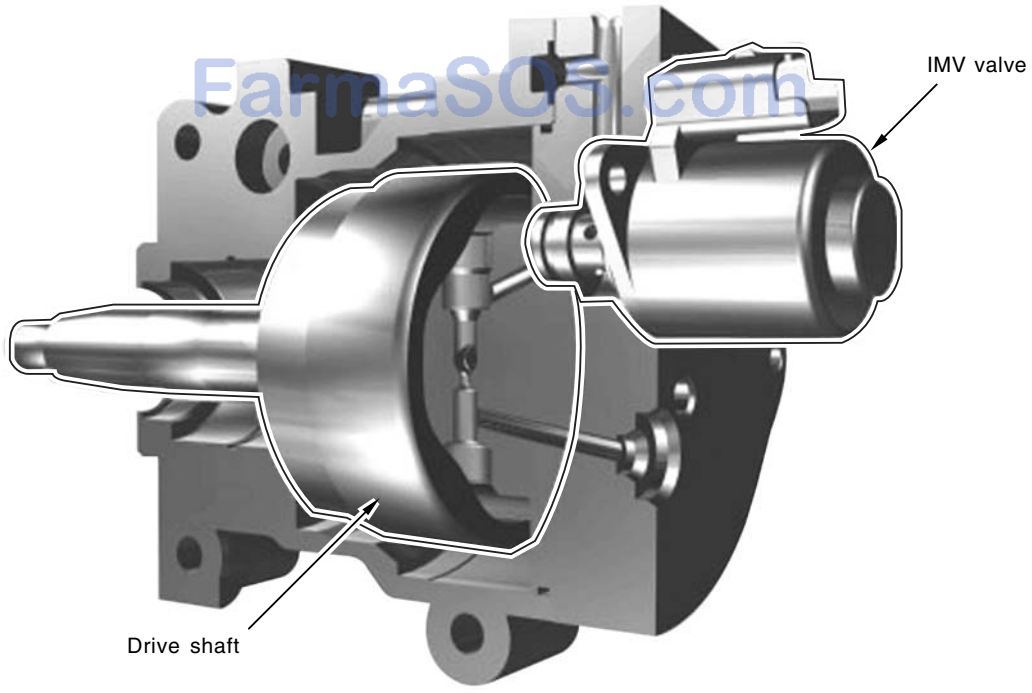

<IMV Valve and High Pressure Pump (Drive Shaft)>

Y220_07033

CHANGED BY	
EFFECTIVE DATE	
AFFECTED VIN	

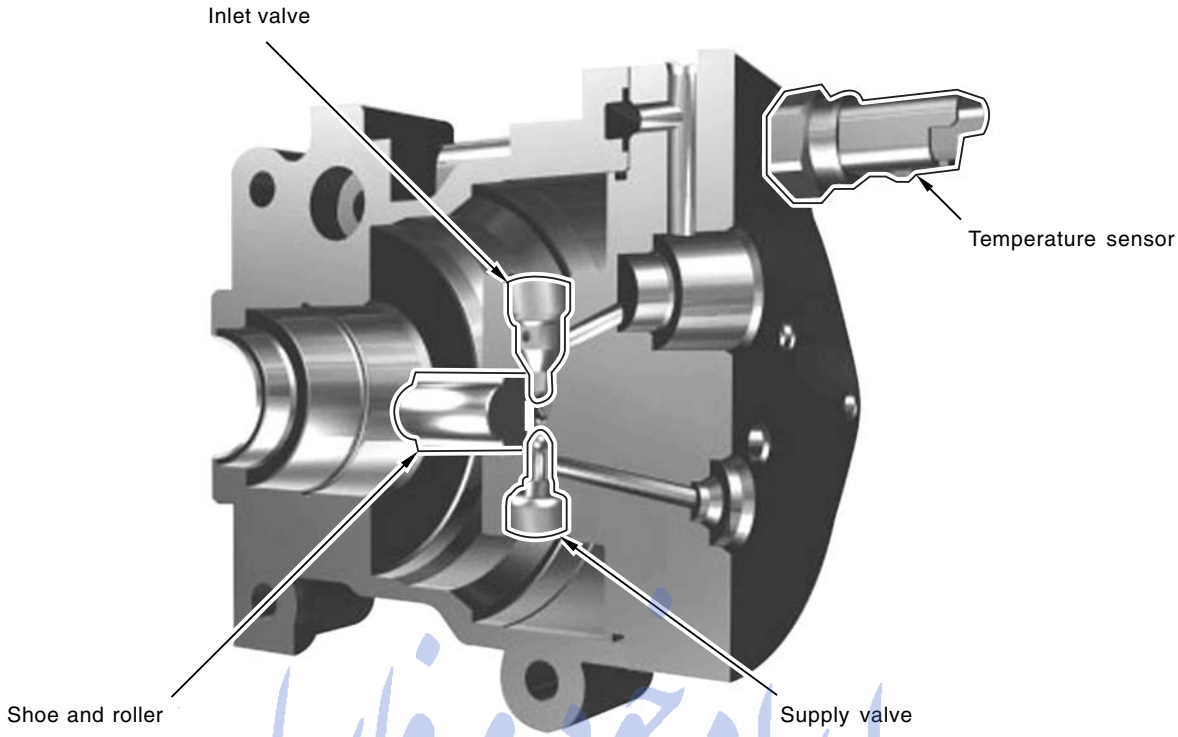

امداد خودرو فارما

<Inlet Valve, Outlet Valve, Shoe and Roller, Temperature Sensor>

Y220_07034

تلفن شبانه روزی: ۰۲۱-۸۸۸۶۲۰۸۵
FarmaSOS.com

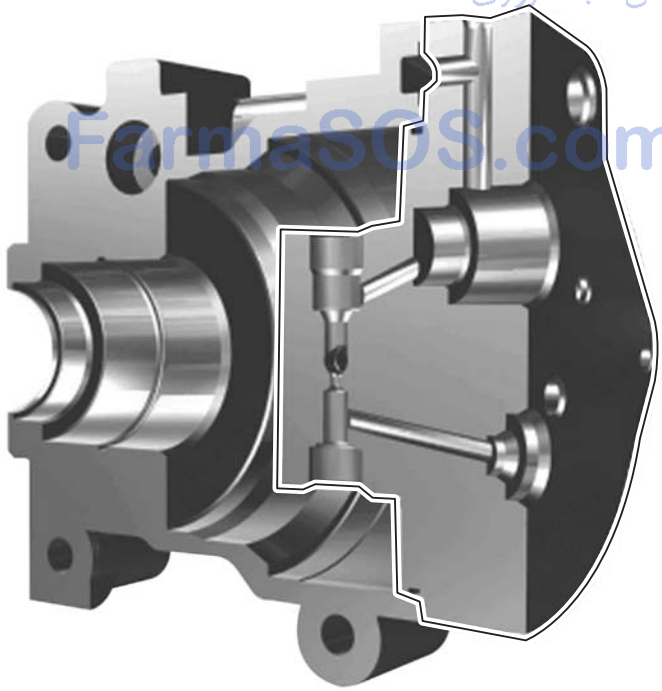

<Hydraulic Head>

Y220_07035

CHANGED BY	
EFFECTIVE DATE	
AFFECTED VIN	

Removal

※ Preceding Works
- Disconnection of negative battery cable
- Removal of engine cover

The trouble diagnosis should be performed before removing the HP pump. Refer to “Diagnosis” section.

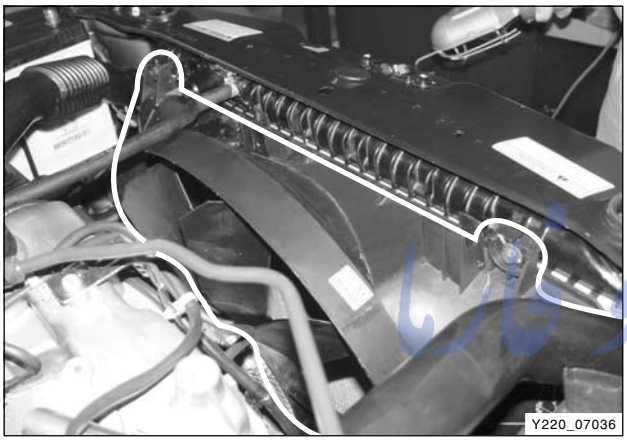

1. Remove the bolts on the fan shroud. Disconnect the air intake duct from intake manifold and the coolant outlet port connecting hose.

Notice

Plug the coolant port not to get the coolant into the engine. Add the coolant as required when installing.

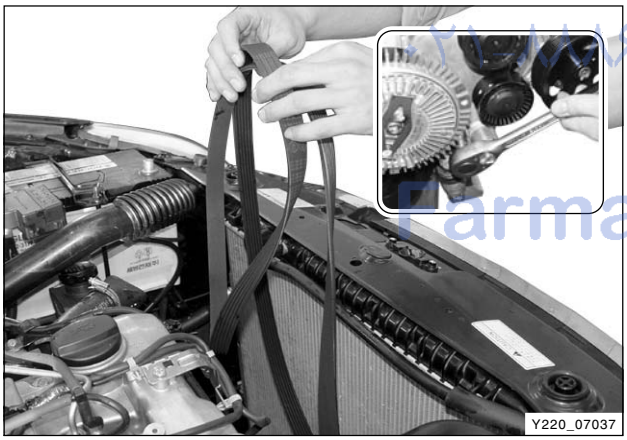

2. Remove the fan belt while pressing down the auto tensioner adjusting bolt.

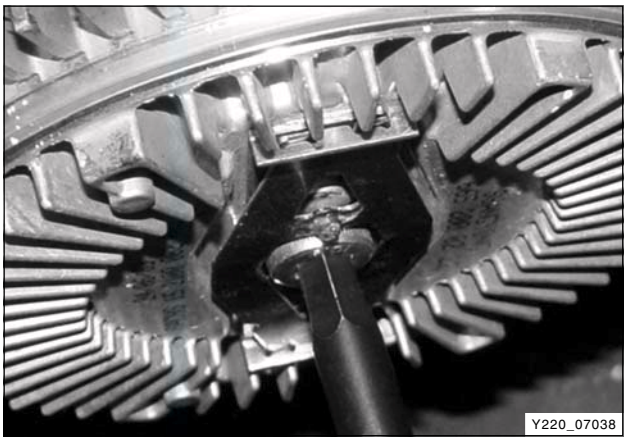

3. Unscrew the center bolt and remove the cooling fan clutch while holding the pulley with counter holder (special tool).

Tightening torque	45 ± 4.5 Nm

4. Remove the fan shroud and fan clutch simultaneously.

امداد خودرو فارما
FarmaSOS.com

5. Unscrew the bolts and remove the belt pulley while holding the belt pulley with a special tool.

Tightening torque	10 ± 1.0 Nm

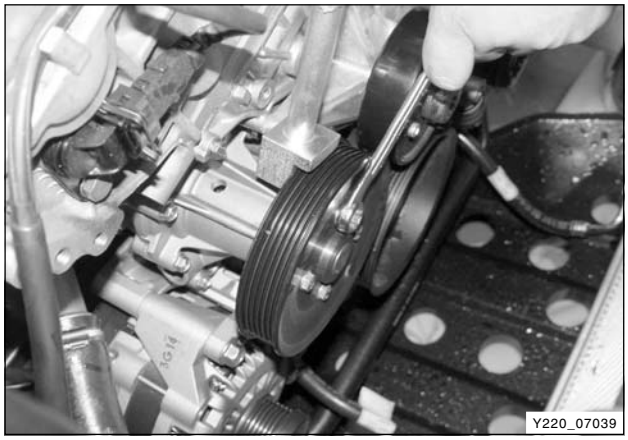

6. Unscrew the upper and lower bolts and remove the auto tensioner.

Tightening torque	Nm
Upper bolt	82 ± 6.0 Nm
Lower bolt	32 ± 3.0 Nm

Notice

To prevent oil leaks, store the removed auto tensioner in upright position.

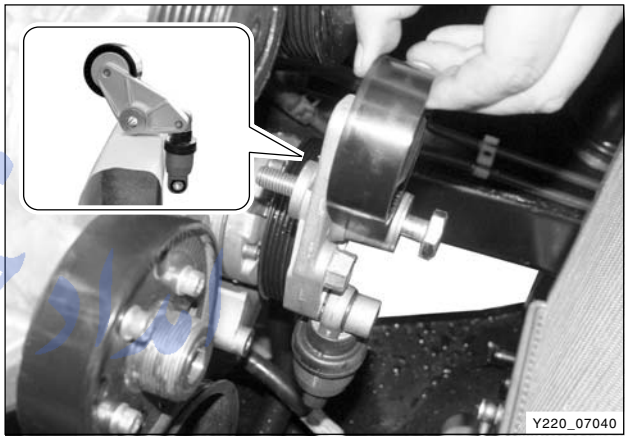

7. Unscrew the bolts and remove the idle pulley.

Tightening torque	10 ± 1.0 Nm

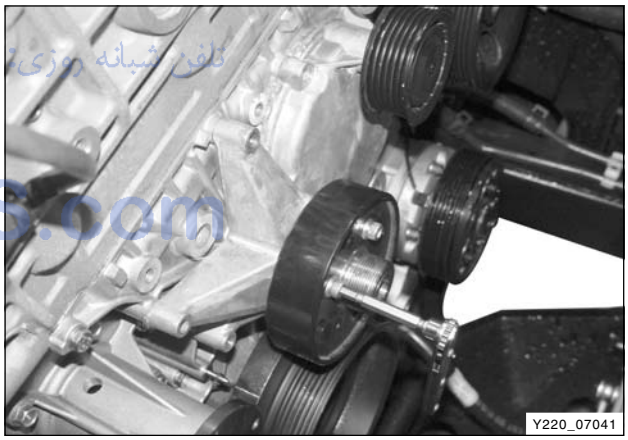

8. Unscrew the bolts and remove the cooling fan bracket (timing chain cover side).

Tightening torque	10 ± 1.0 Nm

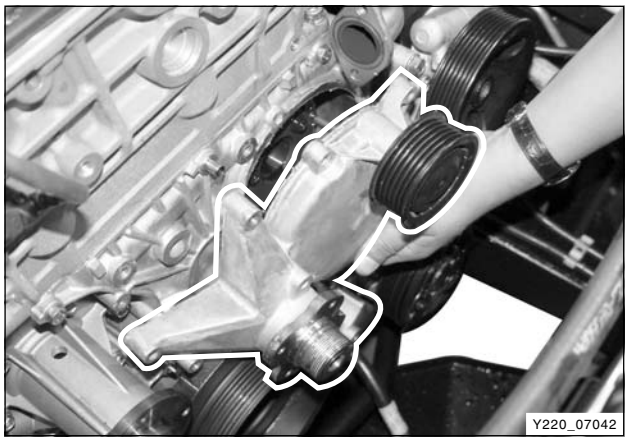

FarmaSOS.com

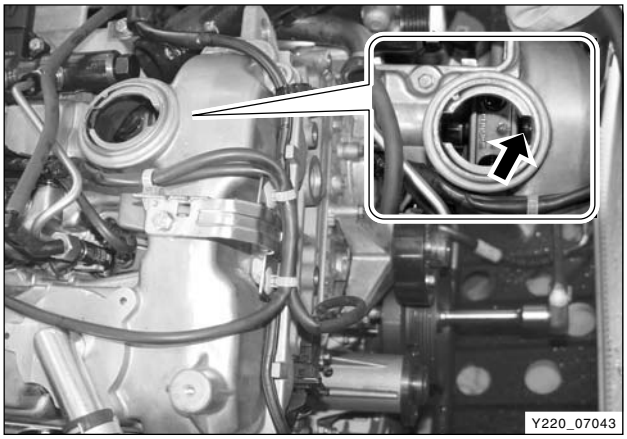

9. Remove the engine oil filler cap and adjust the mark on camshaft to TDC position.

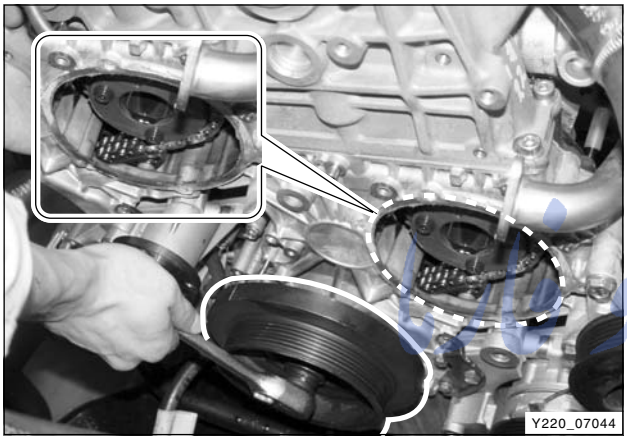

10. Align the TDC mark on the crankshaft pulley to the guide pin and rotate the pulley 720° counterclockwise. Check the mark on the camshaft again.

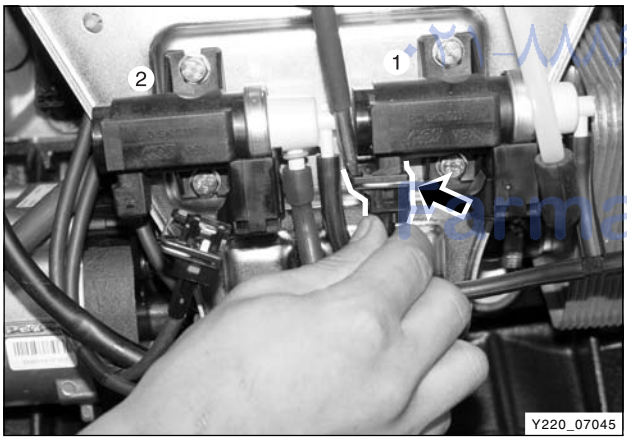

11. Disconnect the vacuum line of EGR vacuum modulator (1), the vacuum line of turbo charger vacuum modulator (2) vacuum line and connectors.

Notice

Be careful not to be mixed the lines when installing.

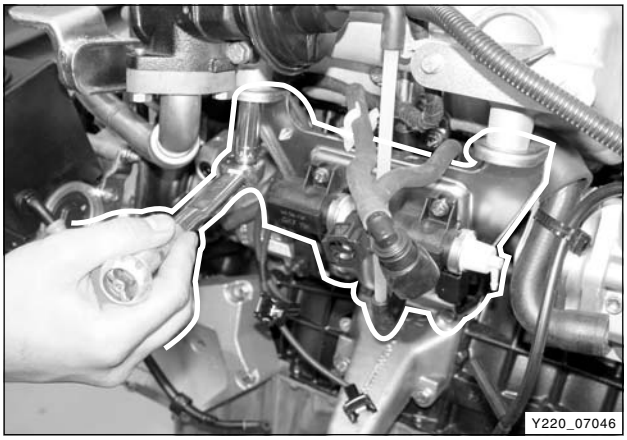

12. Unscrew the bolts and remove the intake manifold mounting bracket.
    - Upper bolts: 13M/ 2EA

      Lower boltes: 5M/ 2EA (Hexagon bolt)

Tightening torque	23 ± 2.3 Nm

امداد خودرو
IranaSOS.com

13. Disconnect the connector behind HP pump, fuel pipes and hose lines.
    1) Fuel temperature sensor connector (green)
    2) IMV connector
    3) Fuel return hose (be careful not to break the HP pump connecting port)
    4) Venturi hose

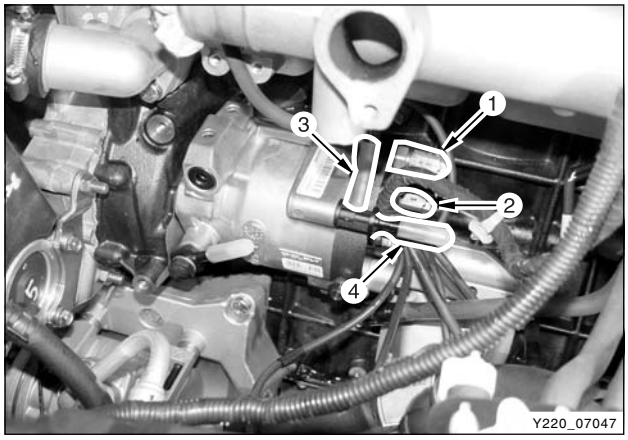

Notice

Plug each opening with sealing cap.

14. Remove the coolant temperature sensor and the knock sensor.

Tightening torque	Nm
Knock sensor	22 Nm
Temperature sensor	20 Nm

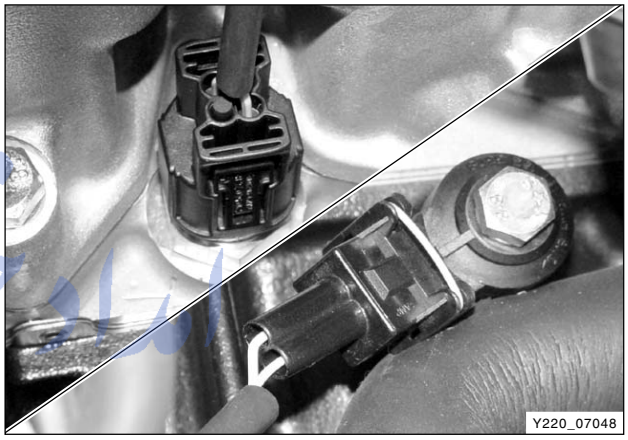

15. Unscrew the bolts and remove the high fuel pressure pipes at HP pump and common rail. Plug the openings with sealing caps.

Tightening torque	40 Nm

Notice

Replace the fuel pipes with new ones.

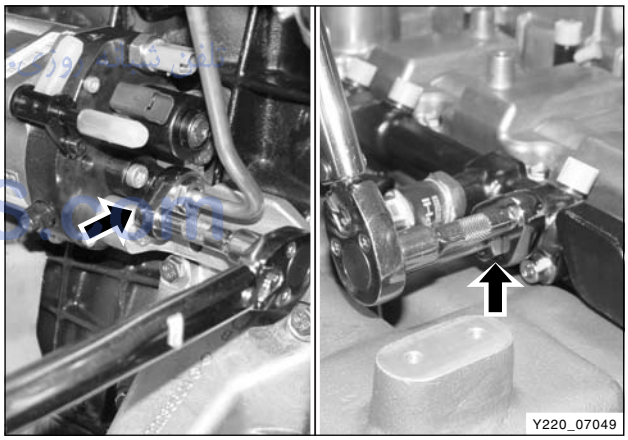

16. Remove the HP pump mounting bracket at engine.

Tightening torque	23 ± 2.3 Nm

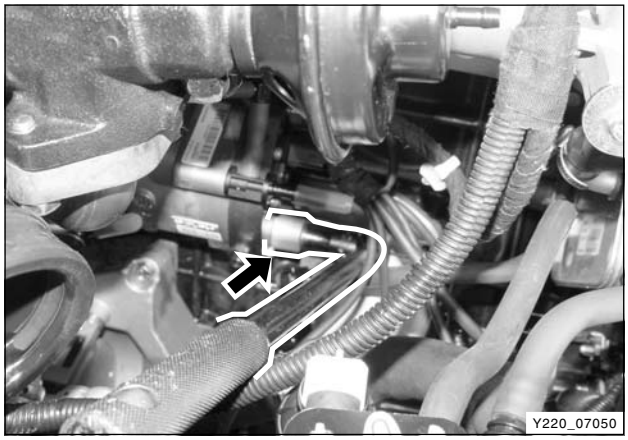

FarmaSOS.com

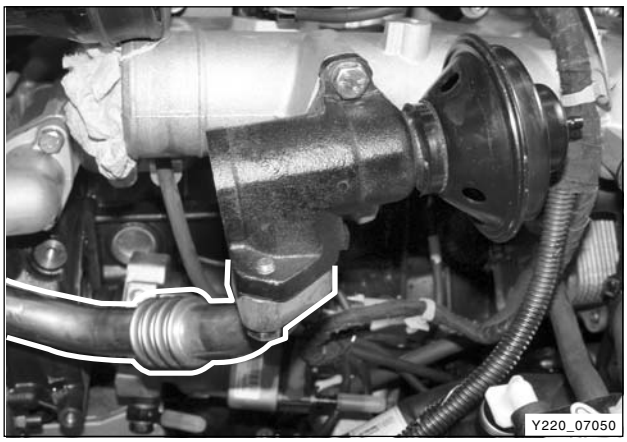

17. Remove the intake EGR pipe and gasket.

Notice

- ***Replace the removed gasket with new one.***
- ***Replace the removed #1 and #3 pipes with new ones.***

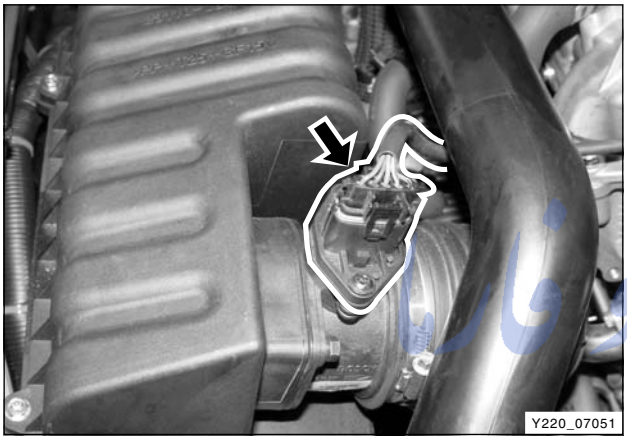

18. Disconnect the HFM sensor connector.

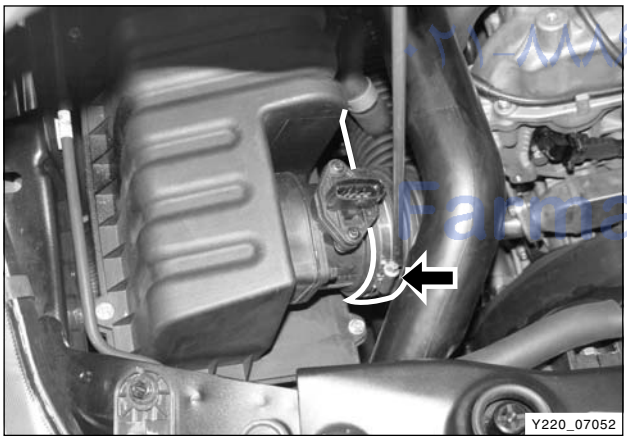

19. Loosen the clamp and separate the hose from air cleaner.

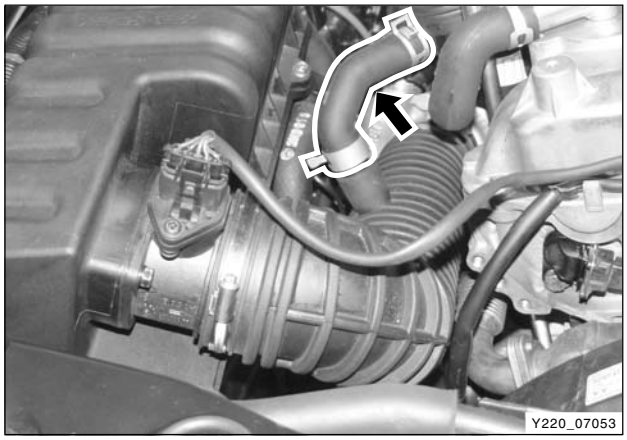

20. Separate the connection lines from turbo charger and PCV separator.

امداد خودرو فارس
تلفن شبانه روزی: ۰۲۱-۸۸۸۶۲۰۸۵
FarsSOS.com

21. Remove the exhaust EGR pipe and gasket (Front side - 10 mm/ 2EA, Exhaust side - 13mm/ 2EA). Remove the center EGR pipe and mounting bolts (13mm/ 4EA).

Notice

- ***Replace the removed gasket with new one.***
- ***Replace the removed #1 and #3 pipes with new ones.***

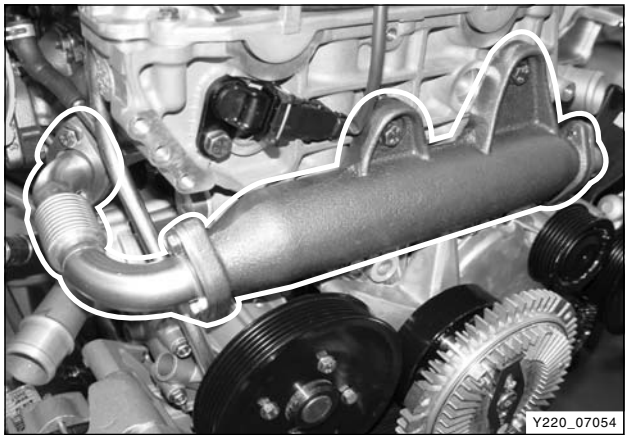

22. Remove the oil dipstick mounting bracket and oil dipstick tube with O-ring.

Tightening torque	10 Nm

Notice

Replace the O-ring with new one.

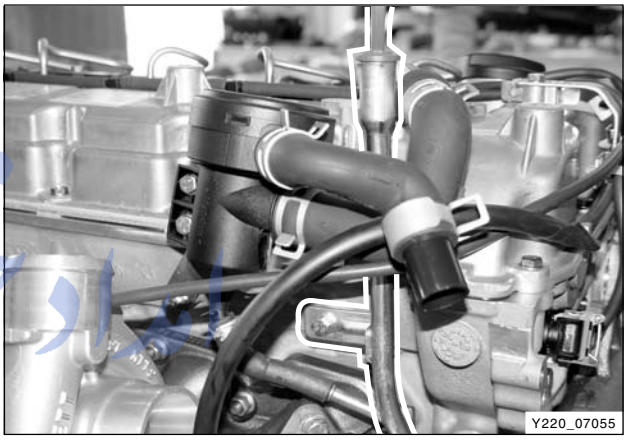

23. Remove the chain tensioner.

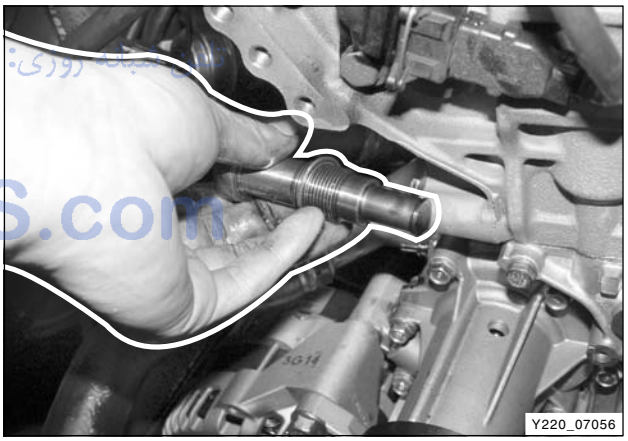

24. Mark on the HP pump sprocket and timing chain.

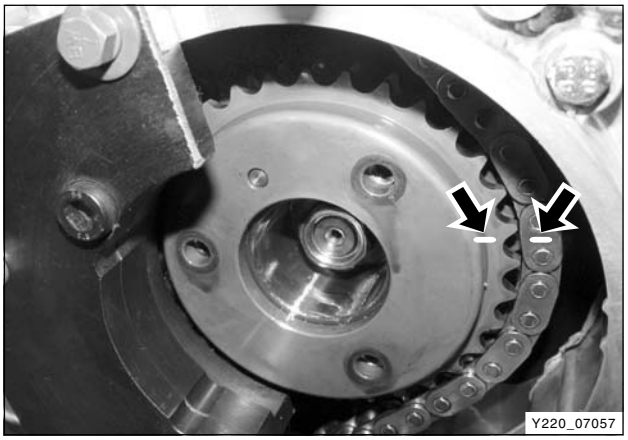

امداد خودرو فارما
۰۲۱-۸۸۸۶۲۰۸۵
FarmaSOS.com

CHANGED BY	
EFFECTIVE DATE	
AFFECTED VIN	

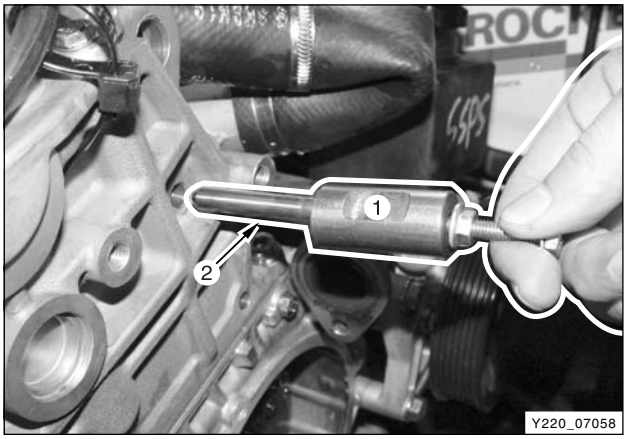

25. Remove the guide rail pins (lower and upper) with a special tool.

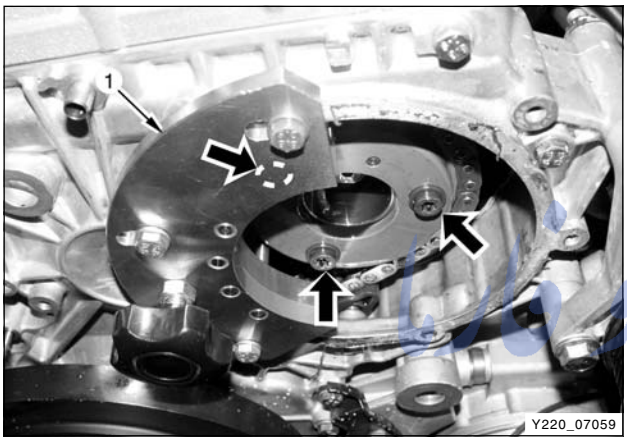

26. Install the special tool (1) for holding HP pump sprocket, unscrew the mounting bolts and remove the sprocket. At this time, rotate the crankshaft 30° to 45° counterclockwise to remove the sprocket.

Tightening torque	20 Nm ± 90°

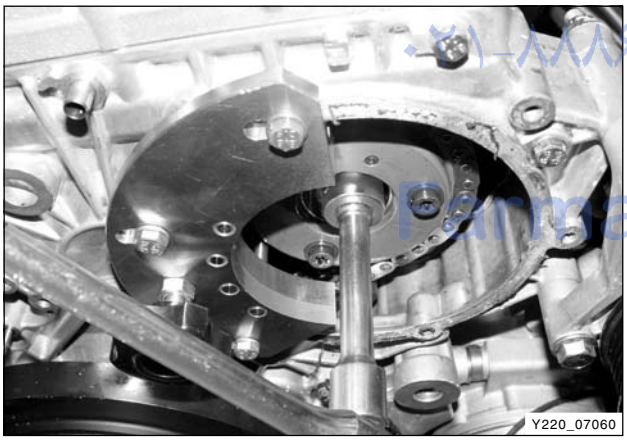

27. Remove the center nut for HP pump shaft.

Tightening torque	65 ± 5 Nm



28. Pull out the HP pump bearing with a special tool.

Notice

Be careful not to damage the bearing.

امداد خودروها
۰۲۱-۸۸۸۶۲۰۸۵ تلفن شبانه روزی
PajmaSOS.com

29. Remove the HP pump bearing bracket (13mm - 3EA).

Tightening torque	24 Nm

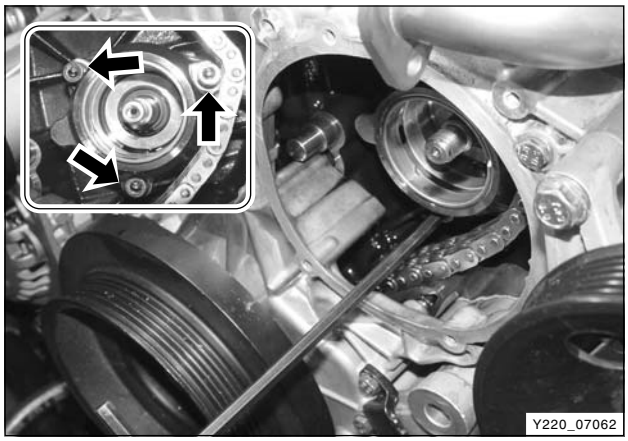

30. Remove the mounting bracket behind the HP pump.
31. Slide the HP pump out rearward while holding it.

Notice

Plugs openings and put it in a box (for returns)

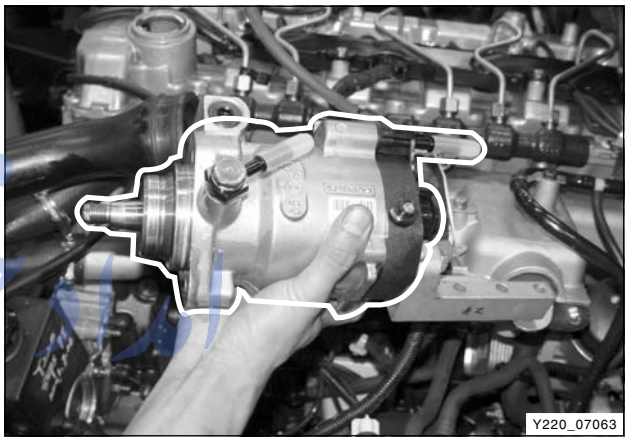

آدرس خودرو فارما
تلفن شبانه روزی: ۰۲۱-۸۸۸۶۲۰۸۵
FarmaSOS.com

CHANGED BY	
EFFECTIVE DATE	
AFFECTED VIN	

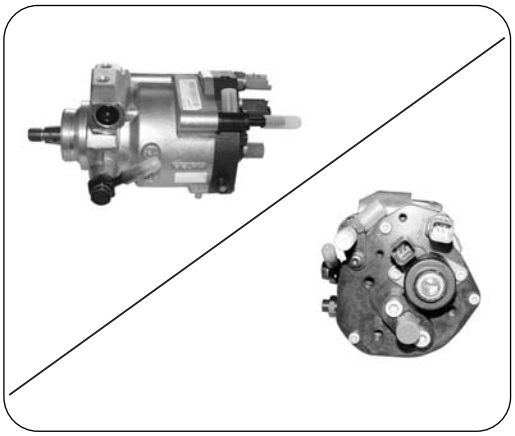

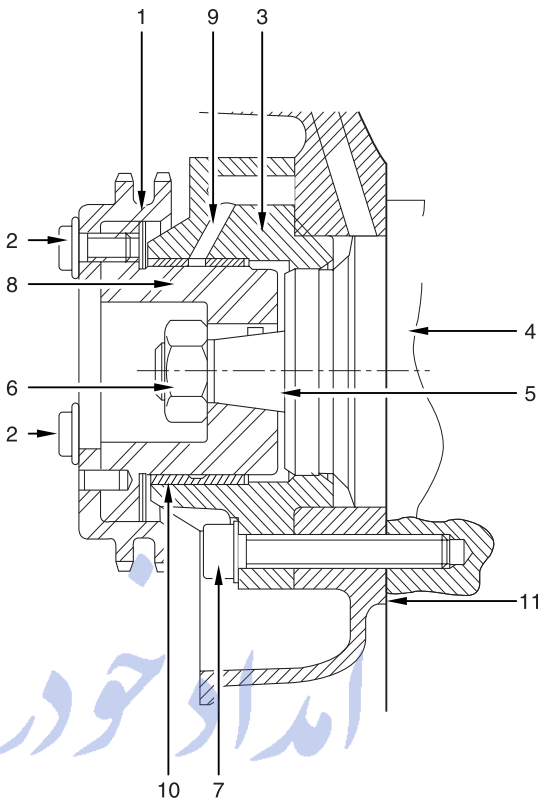

Y220_07064

امداد خودرو فارما
۰۲۱-۸۸۸۶۲۰۸۵
FarmaSOS.com

1. HP pump sprocket
2. 12-sided bolt (20 Nm + 90°)
3. HP pump bearing housing
4. HP pump (High pressure pump)
5. HP pump shaft
6. HP pump center nut (65 ± 5 Nm)
7. HP pump external bolt (24 ± 2.4 Nm)
8. HP pump bearing shaft
9. Oil gallery
10. Bearing bushing
11. Gasket

Installation

1. Install the gasket and HP pump.

   Notice

   Replace the removed gasket with new one.

   Warning

   Remove caps at last minute and always change removed HP pipes.

2. Install the HP pump bearing bracket and HP pump to the cylinder block.

Tightening torque	24 ± 2.4 Nm

   Notice

   Align the oil galleries in cylinder block and bearing bracket.

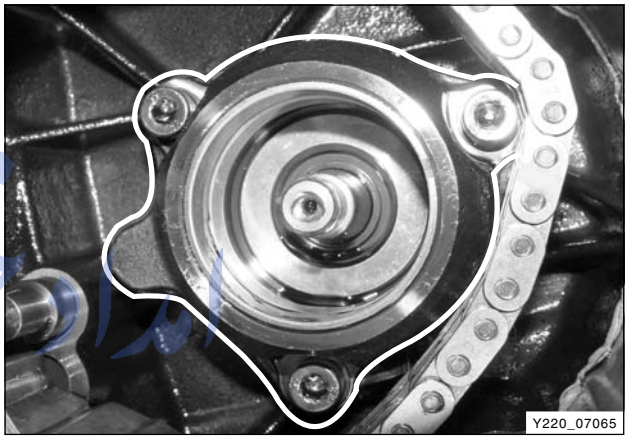
Y220_07065

3. Install the bearing into the bracket.

4. Temporarily install the upper and lower guide rails to seat the chain.
5. Temporarily tighten the center nut for HP pump shaft.

   Notice

   Be careful not to rotate the shaft.

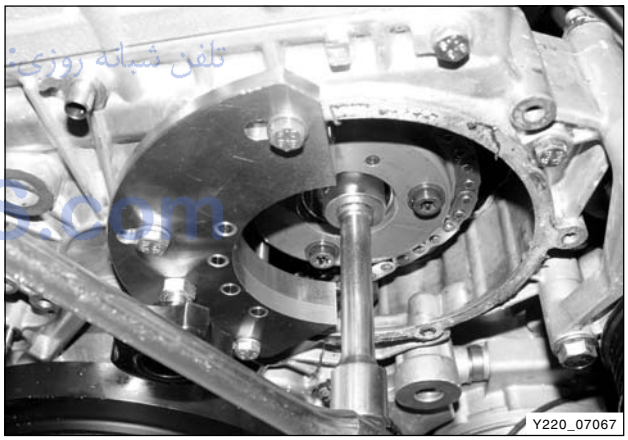
Y220_07067

6. Install the timing chain on the sprocket and lock the sprocket with a special tool.

   Notice

   Do not apply excessive force to the timing chain. Otherwise, the TDC point deviates from correct position.


Y220_07068

FarmaSOS.com

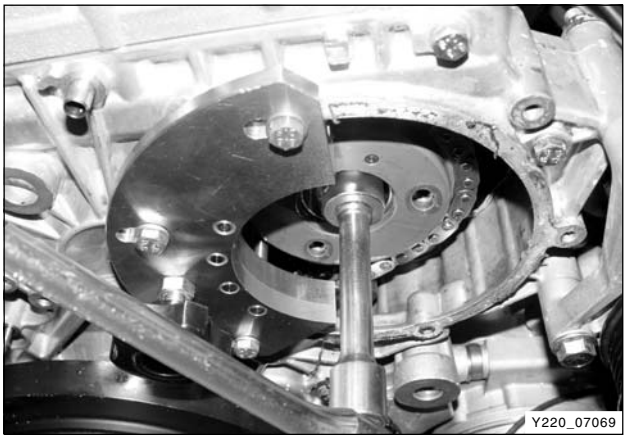

7. Tighten the center nut for HP pump.

Tightening torque	65 ± 5.0 Nm

Notice

Replace the center nut with new one.

8. Press the upper and lower guide pins into the guide.

Notice

Check the timing chain and guide pin for contact.

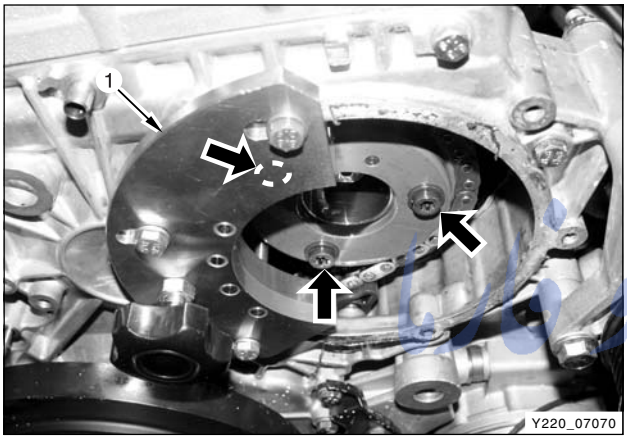

9. Align the marks on the HP pump sprocket and the timing chain and tighten the bolts.

Tightening torque	20 Nm + 90°

10. Remove the special tool.

امداد خودروها
تلفن شبانه روزی ۰۲۲-۸۸۳۶۲۰۸۵
FarmaSOS.com

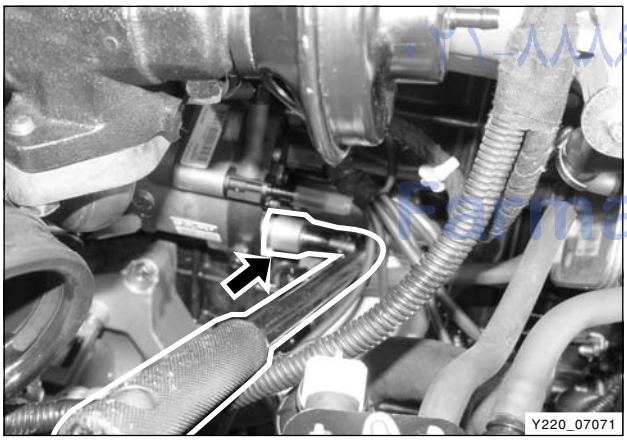

11. Install the mounting bracket behind HP pump.

Tightening torque	25 ± 2.5 Nm

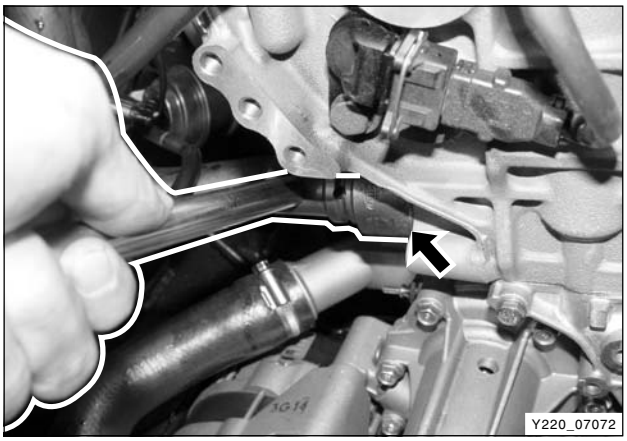

12. Install the chain tensioner.

Tightening torque	80 ± 8 Nm

Notice

- ***Replace the chain tensioner washer with new one.***
- ***Be careful not to drop the washer into the hole.***

13. Check if the mark on the intake camshaft is at the correct position through oil filler opening.

Notice

Rotate the bolt on crankshaft damper pulley two revolutions and check if the mark on the intake camshaft is at the correct position.

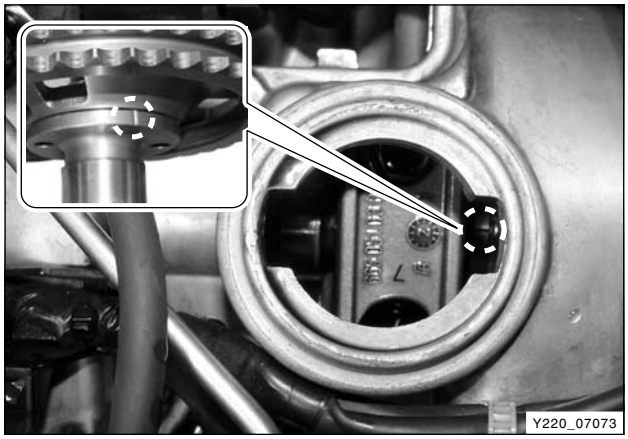

14. Clean the timing chain cover parting surface and apply the sealant on it.

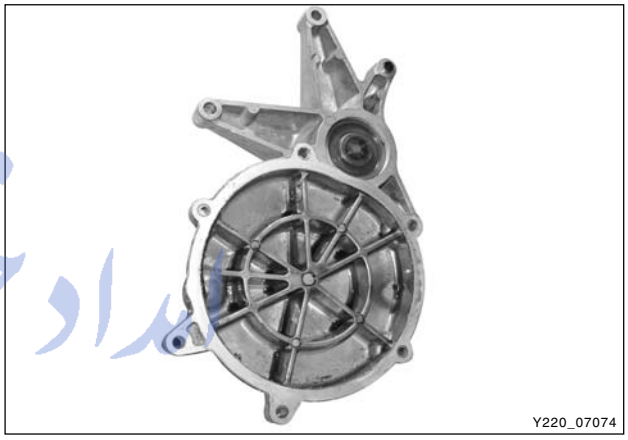

15. Install the timing chain cover.

Notice

Align the cover and the guide pin.

Tightening torque	10 ± 1.0 Nm

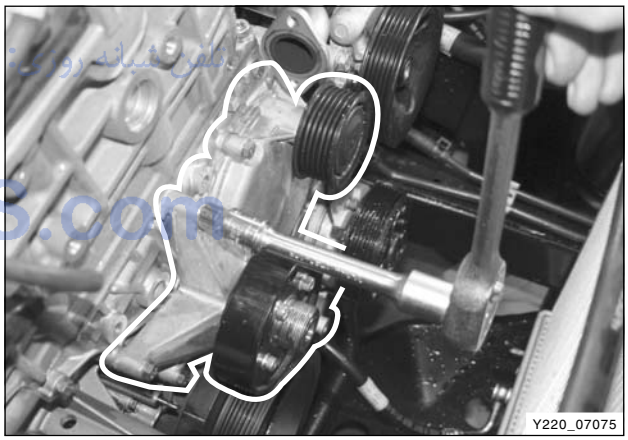

16. Install the auto tensioner assembly.
    - Upper bolt (24M):

Tightening torque	82 ± 6.0 Nm

    - Lower bolt(13M):

Tightening torque	32 ± 3.0 Nm

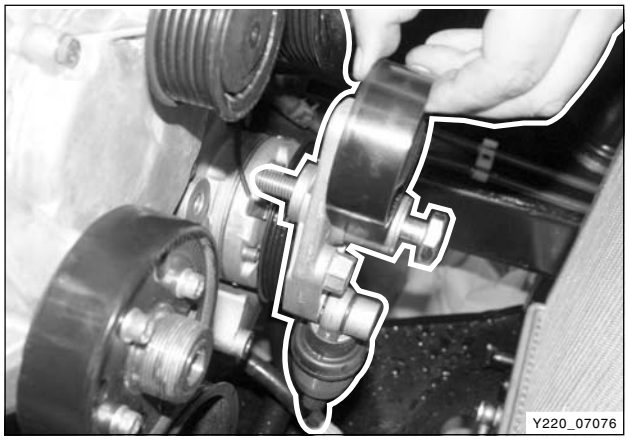

امداد خودرو فارما
۰۲۱-۸۸۸۶۲۰۸۵ (فقط شبانه روزی)
FarmaSOS.com

CHANGED BY	
EFFECTIVE DATE	
AFFECTED VIN	

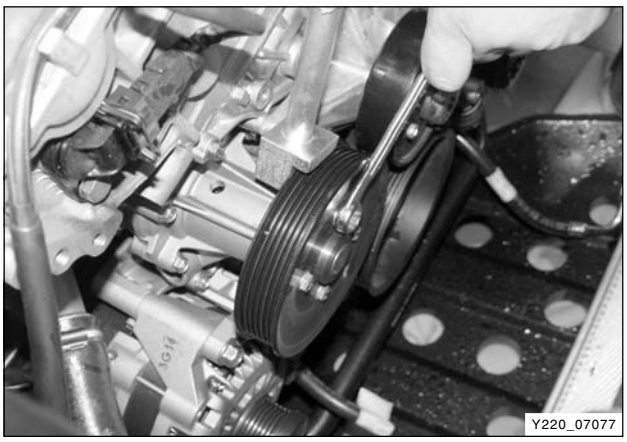

17. Install the coolant pump pulley.

Tightening torque	10 ± 1.0 Nm

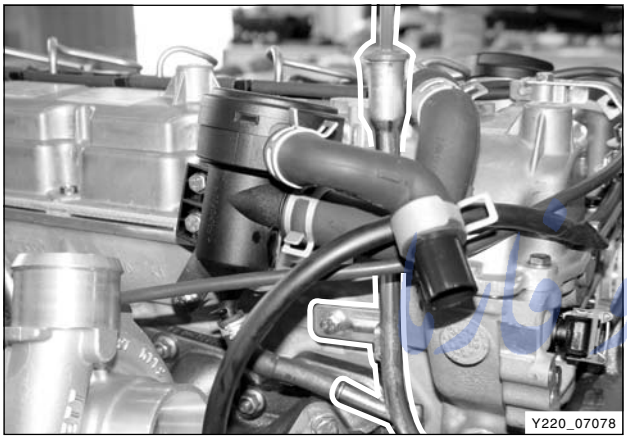

18. Install the fan clutch with a special tool.

Tightening torque	10 ± 1.0 Nm

19. Install the oil dipstick tube and bracket.

Tightening torque	10 ± 1.0 Nm

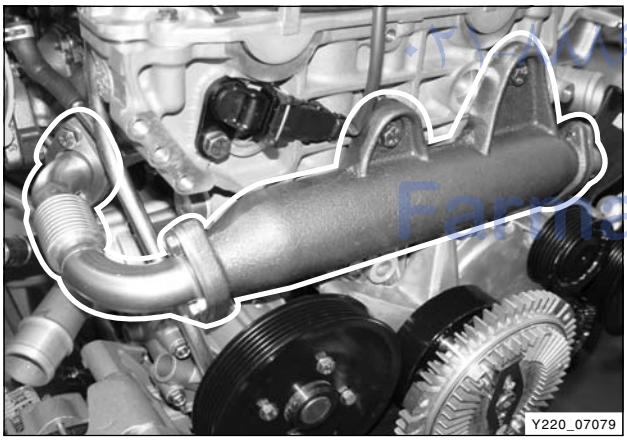

20. Install the exhaust EGR pipe and bracket.

Tightening torque	10 ± 1.0 Nm

Notice

Make sure that the convex surface of new steel gasket is facing the direction as shown in the figure.

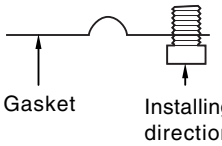

21. Engage the turbo charger and PCV separator connecting lines.
22. Engage the air cleaner hose and tighten the clamp.
23. Connect the HFM sensor connector.
24. Install the EGR center pipe.

Tightening torque	25 ± 2.5 Nm

25. Connect the HP pump connectors and engage the hose lines.
    - Fuel temperature sensor connectors and IMV connector
    - Venturi hose and fuel return hose
26. Install the coolant temperature sensor and the knock sensor.
27. When replaced the HP pump, initialize the fuel pressure by using Scan-i. Refer to “Trouble Diagnosis” section in this manual.

Notice

If the initialization of fuel pressure has not been performed, the engine ECU controls new HP pump with the stored offset value. This may cause the poor engine output.

امداد خودرو
FarnaSoft.ir

27. Install the vacuum modulator to the intake manifold bracket.
28. Connect the vacuum modulator connecting lines and connector.
    (1) Vacuum modulator for turbo charger control
    (2) Vacuum modulator for EGR valve control

    Notice

    Ensure that the vacuum hoses are connected to correct positions.

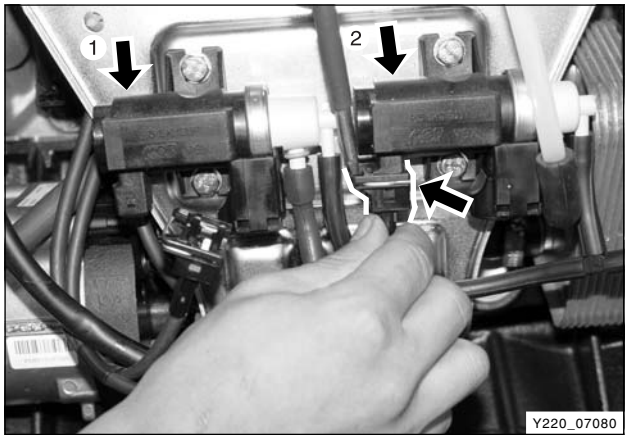

29. Connect the hose to coolant outlet port and tighten the clamp.
30. Install the air intake duct.
31. Install the fan belt while pressing the auto tensioner adjusting bolt.

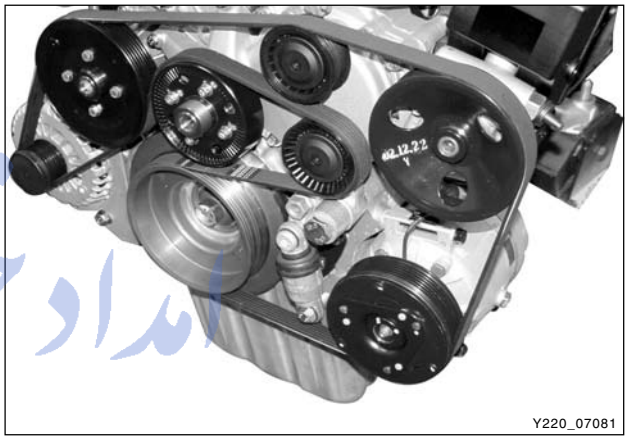

امداد خودرو فارما
تلفن شبانه روزی: ۰۲۱-۸۸۸۶۲۰۸۵
FarmaSOS.com

32. Place the fan shroud in its location and install the cooling fan by using an open end wrench.

Tightening torque	10 ± 1.0 Nm

33. Install the fan shroud.
34. Add the coolant.
35. Check all the connections for tightness and pump the priming pump to deliver the fuel to the transfer line of HP pump.
36. Start the engine and check if abnormality is present.
37. Run leak detection cycle to get rid of air in the system using scan 100.

▶ Fuel Filter

Function

Foreign materials in fuel can damage the pump components, transfer valve and injectors. Therefore, the high pressure direct injection engine must use fuel filter. Otherwise, the operation performance will drop dramatically. And, diesel fuel may contain water due to condensation by temperature changes and this condensation water can damage the system by corroding the injection system. Thus, the common rail engine should have function that can drain water periodically.

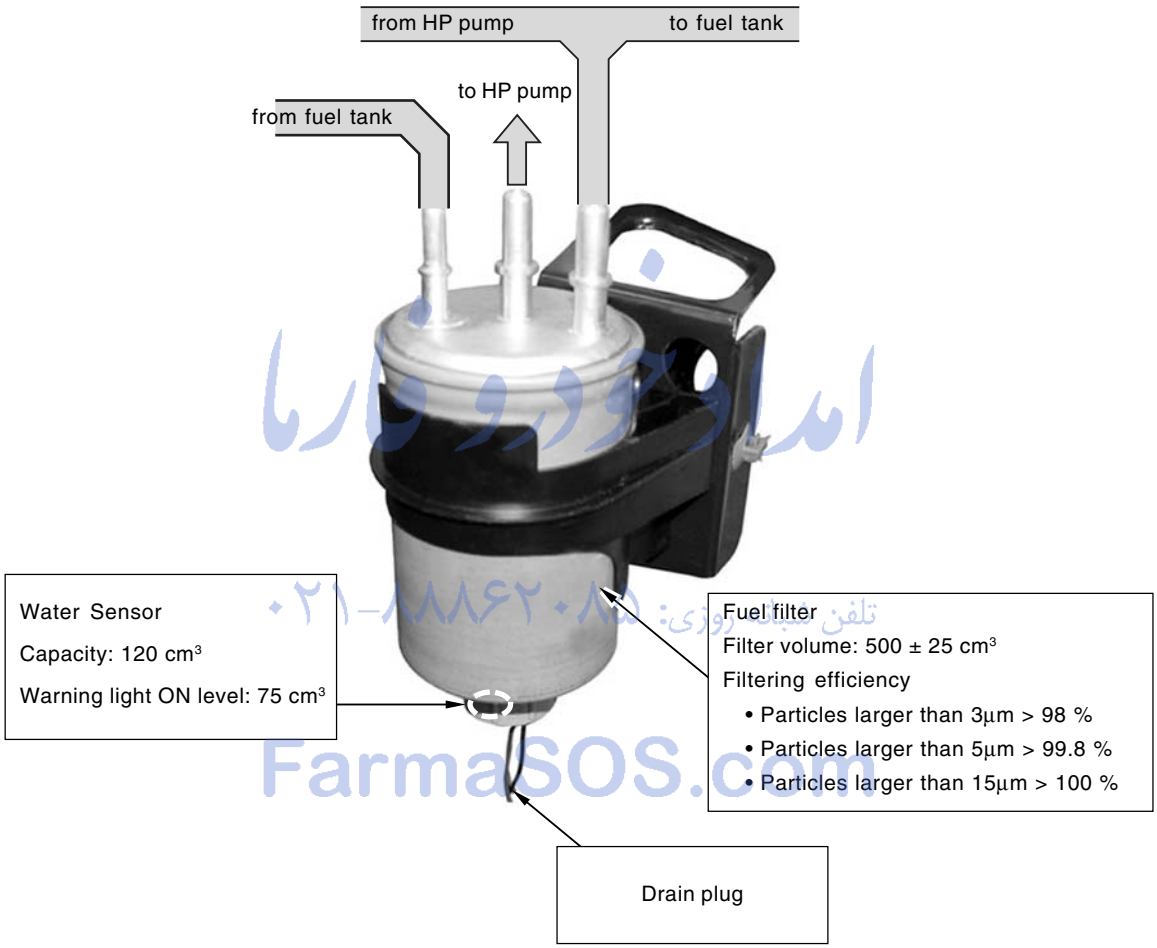

FarmaSOS.com

CHANGED BY	
EFFECTIVE DATE	
AFFECTED VIN	

Change Interval: 30,000 km

Water separation and storage function

- Function: It separates the condensation water from diesel fuel to prevent the water from getting into FIE system, and results in protection of FIE system. (manual drain)
- Water storage capacity: 120 cc
- Water sensor: light if over 39 cc
- Water drain interval: When changing engine oil or every 20,000 km

Water sensor

It is integrated in the filter and sends signal to ECU when water level reaches at a specified value (over 39 cc) in the filter to let the driver drain the water.

Fuel De-Waxing – Improving starting performance in cold weather

Due to characteristics of diesel fuel, some of fuel components solidify during cold winter under below a specific temperature (-15°C). When those symptoms happen, engine may stall; however, some of the fuel (temperature rises due to high compression) in the HP pump in D27DT engine return to the filter to warm up fuel when temperature is below 50°C by improving cold start performance during cold winter.

امداد خودرو فارما
FarmaSOS.com

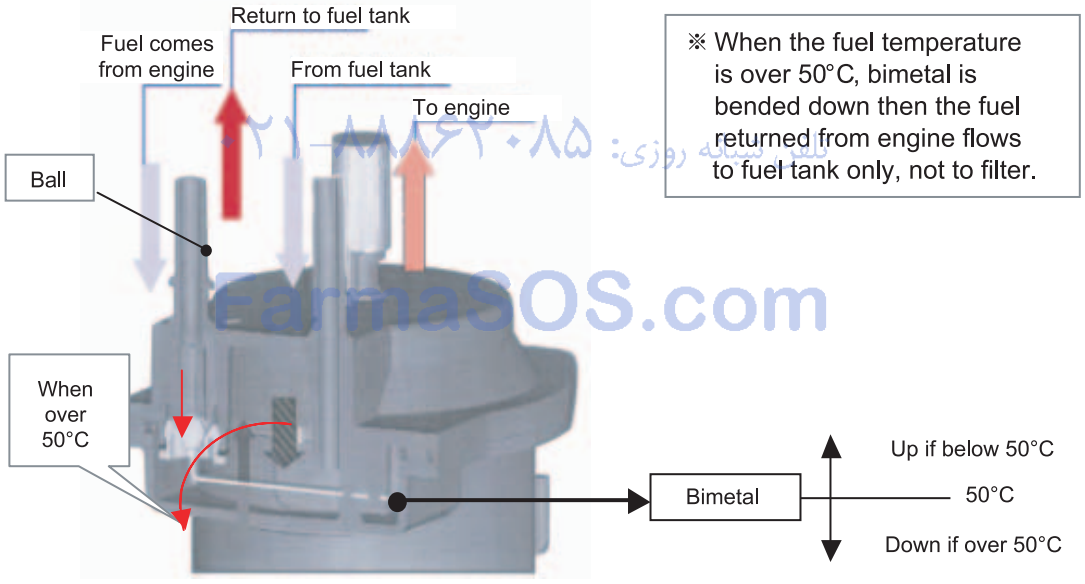

<Fuel flow in the fuel filter>

CHANGED BY	
EFFECTIVE DATE	
AFFECTED VIN	

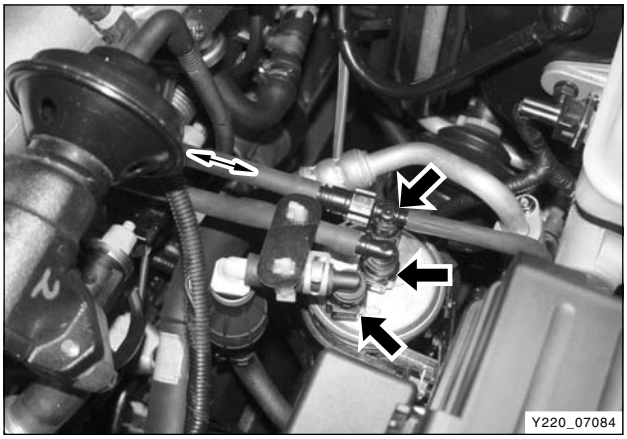



Removal and Installation

1. Disconnect the fuel supply and return hoses.

   Notice

   - ***Plug the openings of hoses and fuel filter with sealing caps.***
   - ***Ensure that the hoses are connected to correct positions.***

2. Loosen the bracket bolts and disconnect the hose from the drain plug.
3. Remove the fuel filter.
4. Install in the reverse order of removal.
5. Press the priming pump until it becomes rigid to deliver the fuel to the transfer line of HP pump.

امداد خودرو فارما
تلفن شبانه روزی: ۰۲۱-۸۸۸۶۲۰۸۵
FarmaSOS.com

▶ Priming Pump

If fuel runs out during driving or air gets into fuel line after fuel filter replacement, it may cause poor engine starting or damage to each component. Therefore, the hand priming pump is installed to fill filter.

When the vehicle is under the conditions as below, press the priming pump until it becomes rigid before starting the engine.

Conditions for using Priming Pump

- After run out of fuel
- After draining the water from fuel filter
- After replacing the fuel filter

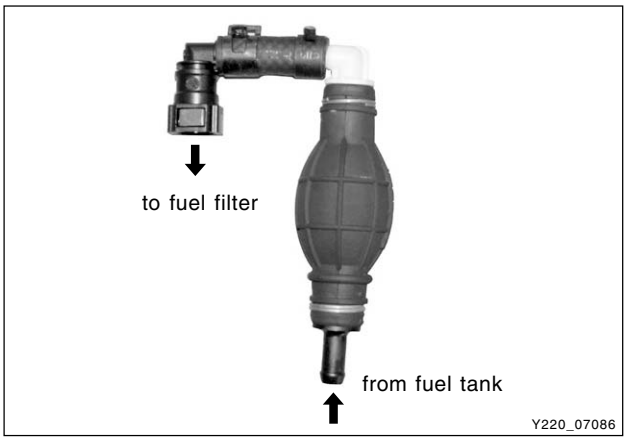

Notice

When the fuel filter is replaced, the fuel in the fuel tank should be transferred to the filter by using priming pump. So never transfer the fuel in the fuel tank to the filter by driving HP pump with cranking the engine.

امداد خودرو فارس
تلفن شبانه روزی: ۰۲۱-۸۸۸۶۲۰۸۵
FarmaSOS.com

▶ Relations Between Pressure and Temperature In Fuel Transfer Line

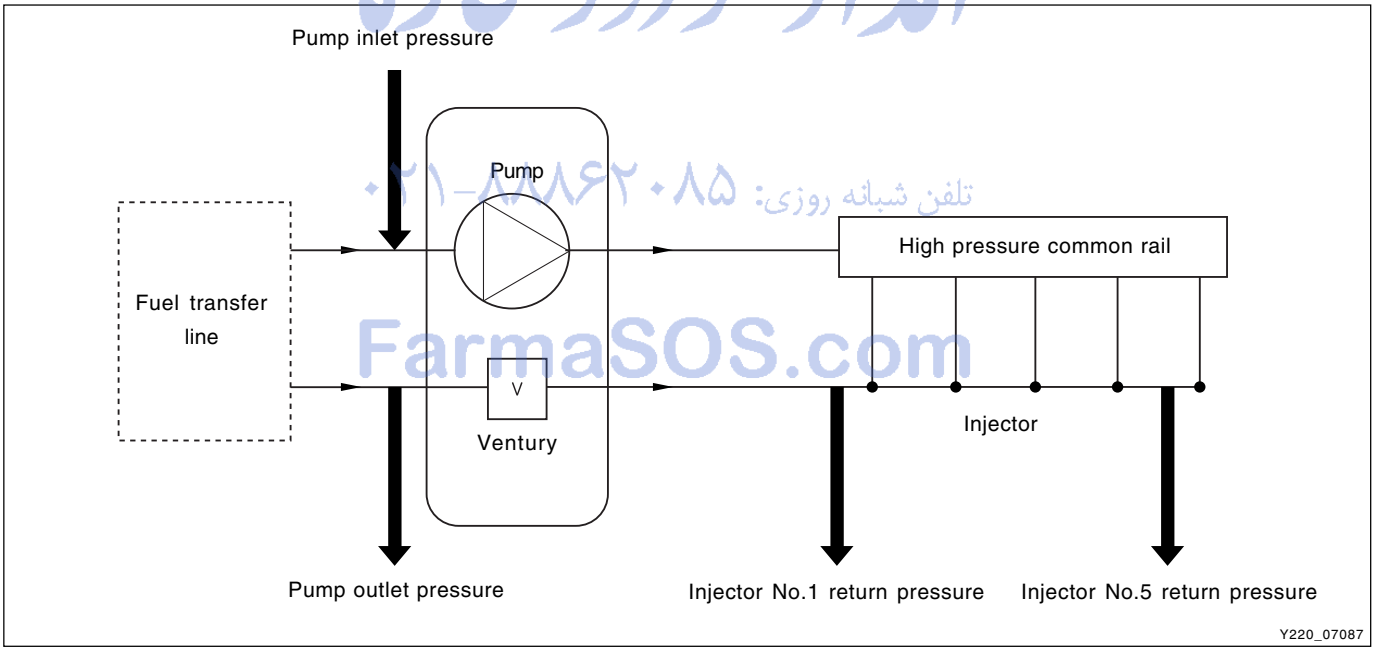

- The fuel transfer line is the line between fuel tank and HP pump inlet port. The pressure on this line affects the lifetime of fuel filter.
- Temperature of fuel transfer line
  - HP pump inlet temperature is less than 80°C.
  - The temperature of fuel pump inlet is up to 80°C.

    And, diesel fuel has lubrication effects due to its viscosity. Thus, the fuel is also used for pump lubrication. However, this lubrication performance drops as the temperature rises. Accordingly, when the fuel temperature is over 50°C, 100% of fuel is returned to fuel tank to cool down the temperature and then increase the lubrication effects of fuel and prevent heat damage on each section of high fuel pressure line.

CHANGED BY	
EFFECTIVE DATE	
AFFECTED VIN	

▶ High Pressure Accumulator (Common Rail)

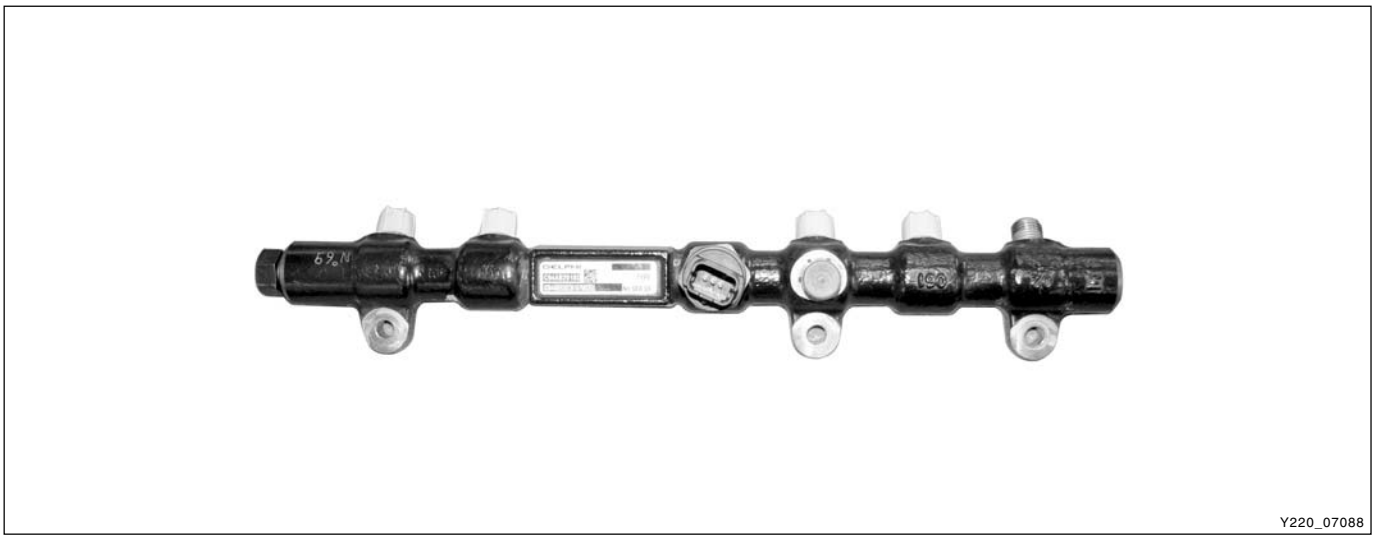

Description

The high pressure accumulator reserves the high pressure fuel. Simultaneously, the pressure changes due to the delivery from HP pump and the fuel injection is diminished by rail volume. This high pressure accumulator is commonly used in all cylinders. Even when a large amount of fuel leaks, the common rail maintains its internal pressure. This ensures that the injection pressure can be maintained from when the injector opens.

Function

- Relieve the pressure pulsation
- Provide pressure information to ECU (fuel pressure sensor)

Specifications

- Material: Forged Steel
- Dimension: - Volume: 22 ± 1cc
  - Length: Max. 397.7 mm
  - Outer diameter: 25.3 mm
- Fuel pressure sensor Integrated type
  - Sensor input voltage: 5 ± 0.1V
  - Sensor output signal voltage: - 4.055 ± 0.125 V @ 1600 ± 15 bar
    - 0.5 ± 0.04 V @ 0 bar
- Operating pressure range
  - Normal condition: 0 ~ 1600 bar
  - Max. Overpressure: 2100 bar
- Ambient temperature: - available within -40°C ~ 125°C
  - Spontaneous max. temperature after engine stops: 140°C (acceptable against total 15 hours)
- Fluid temperature: -40 ~ 100°C under normal operating conditions
- Removal and installation: 10 times without any damage

امداد خودرو ماری
تلفن شبانه روزی: ۰۲۱-۸۸۸۶۲۰۸۵
FarmaSOS.com

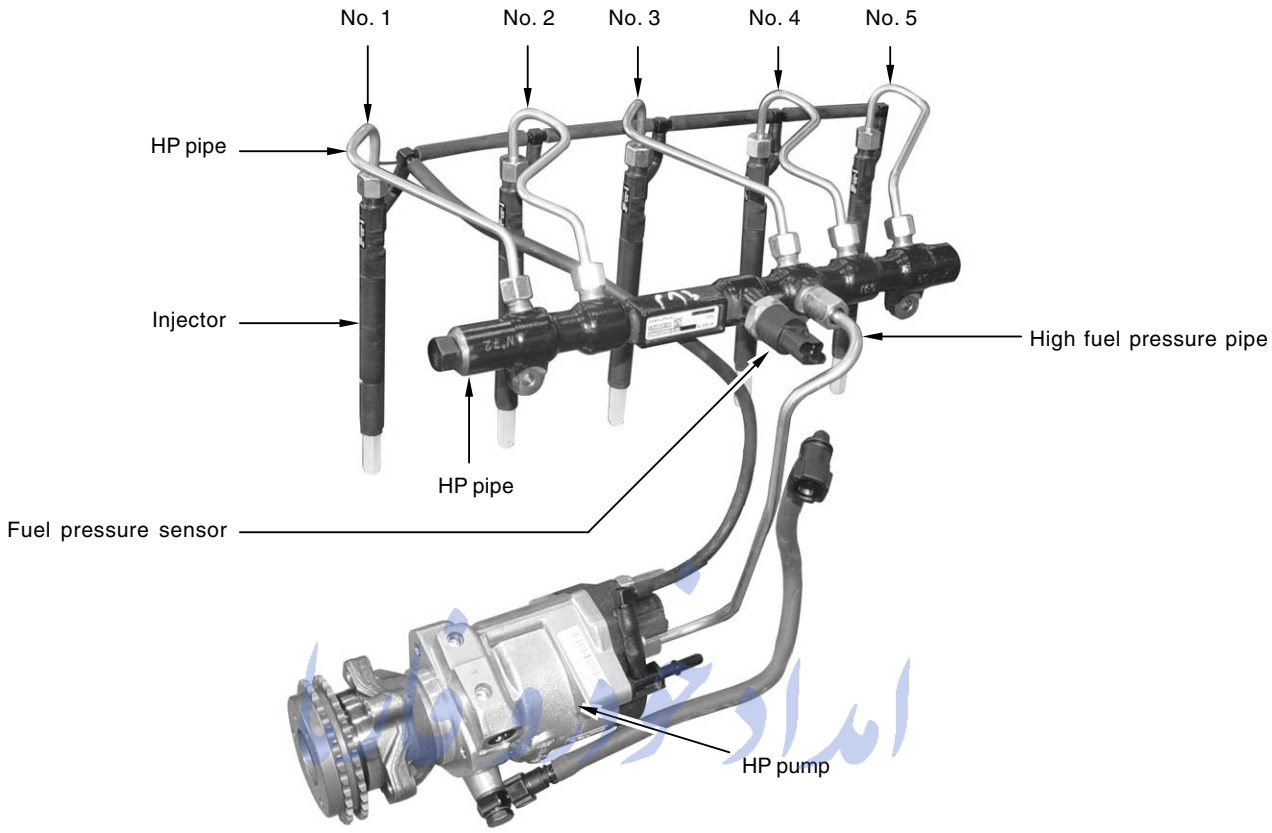

<High pressure accumulator>

تلفن شبانه روزی: ۰۲۱-۸۸۴۶۲۰۸۵

▶ High Fuel Pressure Pipe

FarmaSOS.com

- Function: Resistant to pressure changes, tightness against surroundings, supplying fuel through pump, rail and injector with high pressure
- Material: Steel (Zn Plated)
- Common: Cylinder 1 & 3, 2 & 4, 5
- Internal pressure
  - Internal operating pressure: 0 ~ 1600 bar during its lifetime
  - Spontaneous max. pressure when restoring: 2100 bar (max. total period: 20 hours)
  - Bursting pressure: over 2500 bar
- To keep cleanness and tightness, the high pressure pipe assembly should be used only once.

Notice

- ***Make sure to replace the removed high fuel pressure pipes.***
- ***Tighten the fasteners with the specified tightening torque.***

CHANGED BY	
EFFECTIVE DATE	
AFFECTED VIN	

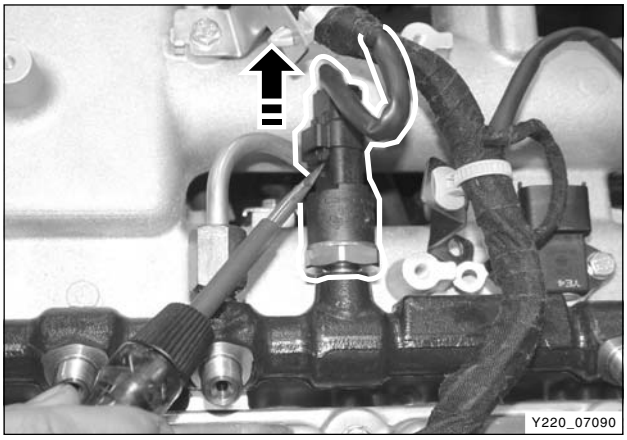

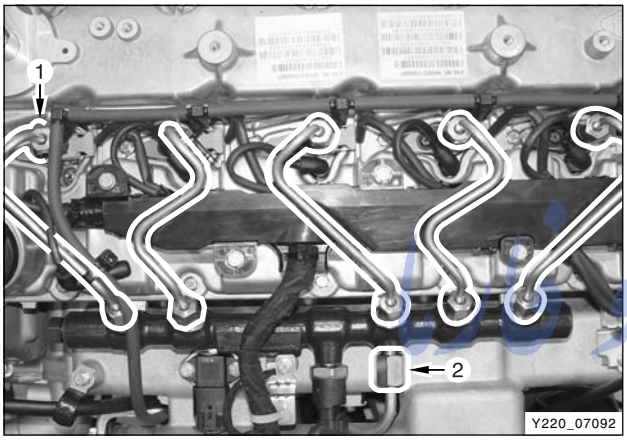

Removal and Installation

※ Preceding Work: Removal of engine cover

1. Disconnect the fuel pressure sensor connector.

Notice

- ***Replace the fuel pipes with new ones.***
- ***Plug the openings of hole in the common rail with sealing caps.***
- ***Check pressure is low before opening the circuit.***

2. Unscrew the nuts and remove the fuel supply main pipe from the fuel line.

Installation Notice

Tightening torque	40 ± 10 Nm

Notice

- ***Replace the fuel pipes with new ones.***
- ***Plug the openings of hole in the common rail with sealing caps.***

3. Unscrew the high fuel pressure line nuts and remove the fuel pipes.

Installation Notice

Tightening torque	40 ± 10 Nm

Notice

- ***Replace the fuel pipes with new ones.***
- ***Plug the openings of hole in the common rail with sealing caps.***

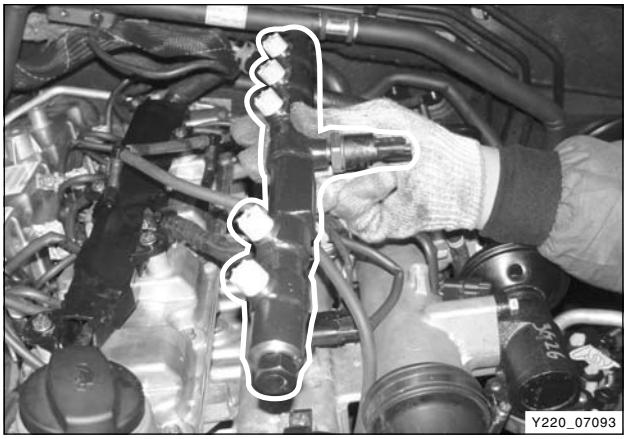

4. Unscrew the bolts and remove the common rail asssembly.

Installation Notice

Tightening torque	25 ± 2.5 Nm

Notice

- ***Replace the fuel pipes with new ones.***
- ***Plug the openings of hole in the common rail with sealing caps.***

5. Install in the reverse order of removal.

FarmaSOS.com
۰۲۱-۸۸۸۶۲۰۸۵ تلفن شبانه روزی

▶ Fuel Pressure Sensor

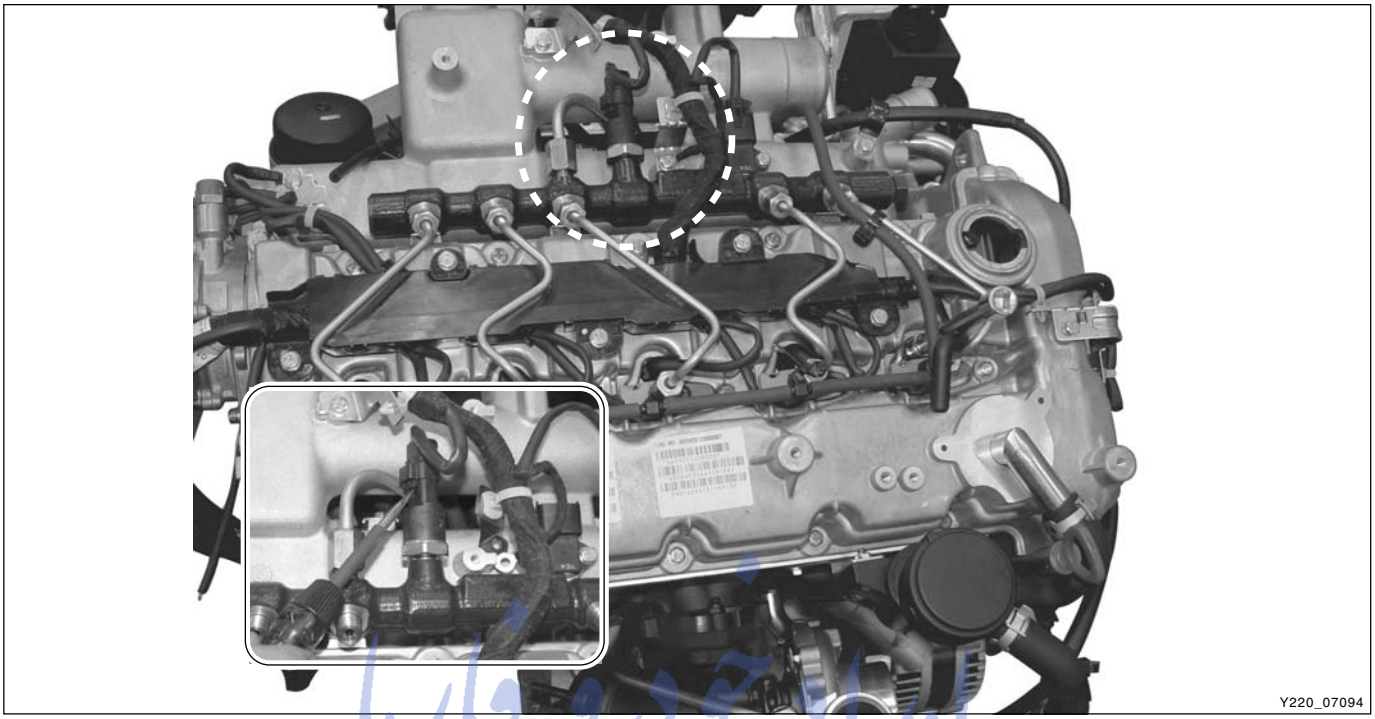

Fuel pressure sensor on the center of common rail detects instant fuel pressure changes and then sends to ECU. When received these signals, ECU uses them to control fuel volume and injection time.

The fuel in the rail reaches to sensor diaphragm via blind hole in the pressure sensor and the pressure signal converts to electrical signal. The signal measured by sensor will be amplified to input to ECU.

This piezo element type sensor changes pressure into electrical signal. Accordingly, when the shape of diaphragm changes, electrical resistance in the layers on the diaphragm changes then can measure 0.5 ~ 5 V.

- Sensor input voltage: 5 ± 0.1 V
- Output signal voltage of sensor
  - 4.055 ± 0.125 V: 1600 ± 15bar
  - 0.5 ± 0.04 V: 0 bar

FarmaSOS.com

CHANGED BY	
EFFECTIVE DATE	
AFFECTED VIN	

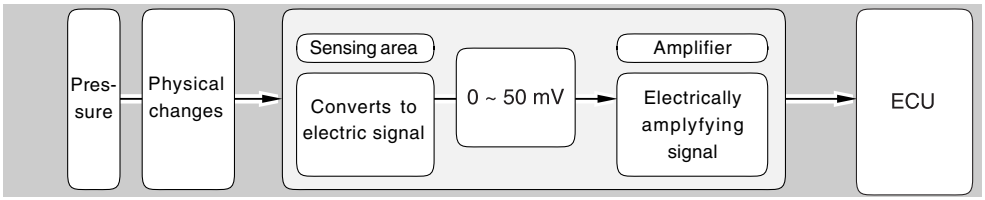

<Operation principle of fuel pressure sensor>

Y220_07095

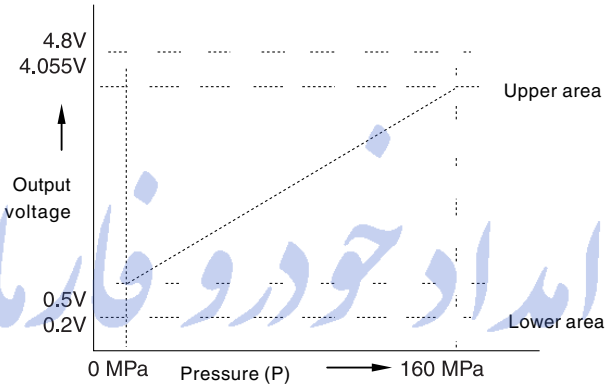

<Sensor voltage>

Y220_07096

امداد خودرو فارما
تلفن شبانه روزی: ۰۲۱-۸۸۸۶۲۰۸۵
FarmaSOS.com

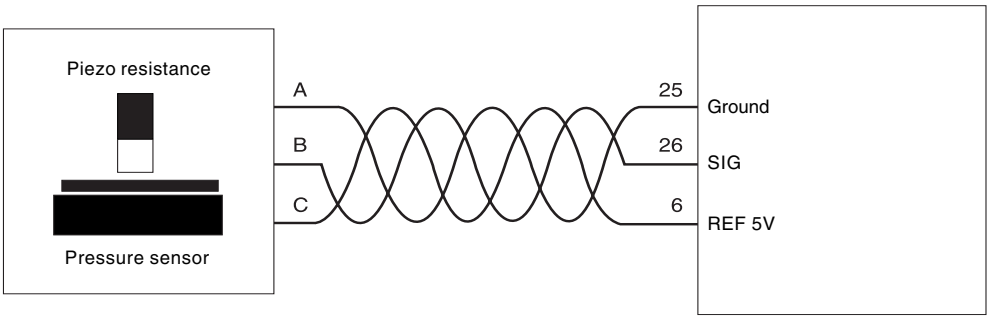

<Circuit diagram of fuel pressuer sensor>

Y220_07097

▶ Fuel Temperature Sensor

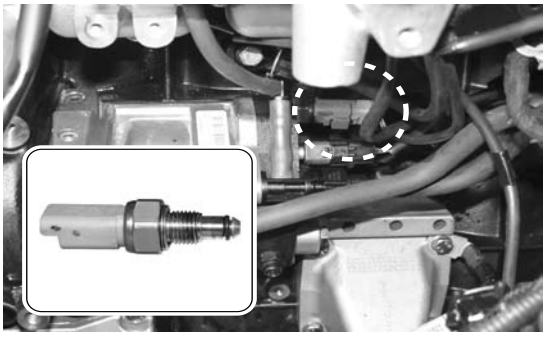

<Fuel temperature sensor>

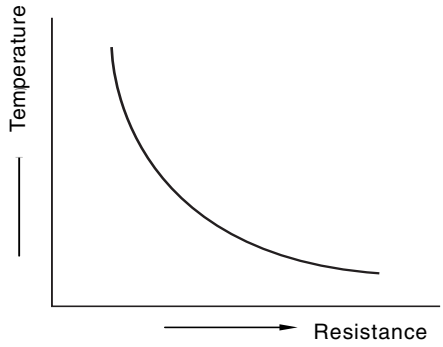

<Output characteristics of fuel temperature sensor>

Y220_07098

Fuel temperature sensor is a NTC resistor that sends fuel temperature to ECU.

In case of NTC resistor, the resistance lowers if engine temperature rises so the ECU detects lowering signal voltages.

Fuel temperature sensor is installed on the fuel return line to correct pressure after measuring fuel temperature. 5V is supplied to the sensor and voltage drop by temperature is delivered to ECU to measure the fuel temperature through analog-digital converter (ADC).

Notice

Fuel temp sensor not to be dismounted.

امداد خودرو فارما
۰۲۱-۸۸۸۶۲۰۸۵ تلفنی شبانه روزی:
FarmaSOS.com

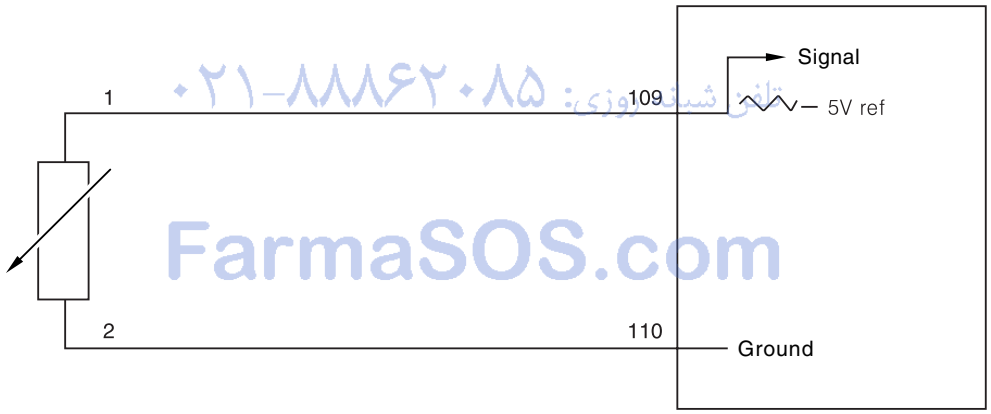

<Circuit diagram of fuel temperature sensor>

Y220_07099

▶ HFM Sensor

- Refer to “Intake System”

▶ Crankshaft Position Sensor

- Refer to “Engine Assembly”

▶ Knock Sensor

- Refer to “Engine Assembly”

▶ Camshaft Position Sensor

- Refer to “Engine Assembly”

CHANGED BY	
EFFECTIVE DATE	
AFFECTED VIN	

INJECTOR

The C21 labels including injector characteristics are attached in each injector. These C21 values should be input to ECU by using Scan-i when replacing the ECU or injectors.

Special cautions:

1. Plug the openings of hoses and pipes with the sealing caps.
2. Replace the copper washer with new one plus injector holder bolt & washer.
3. Tighten the injector holder bolts with the specified tightening torque.
4. Be careful not to drop the injector.

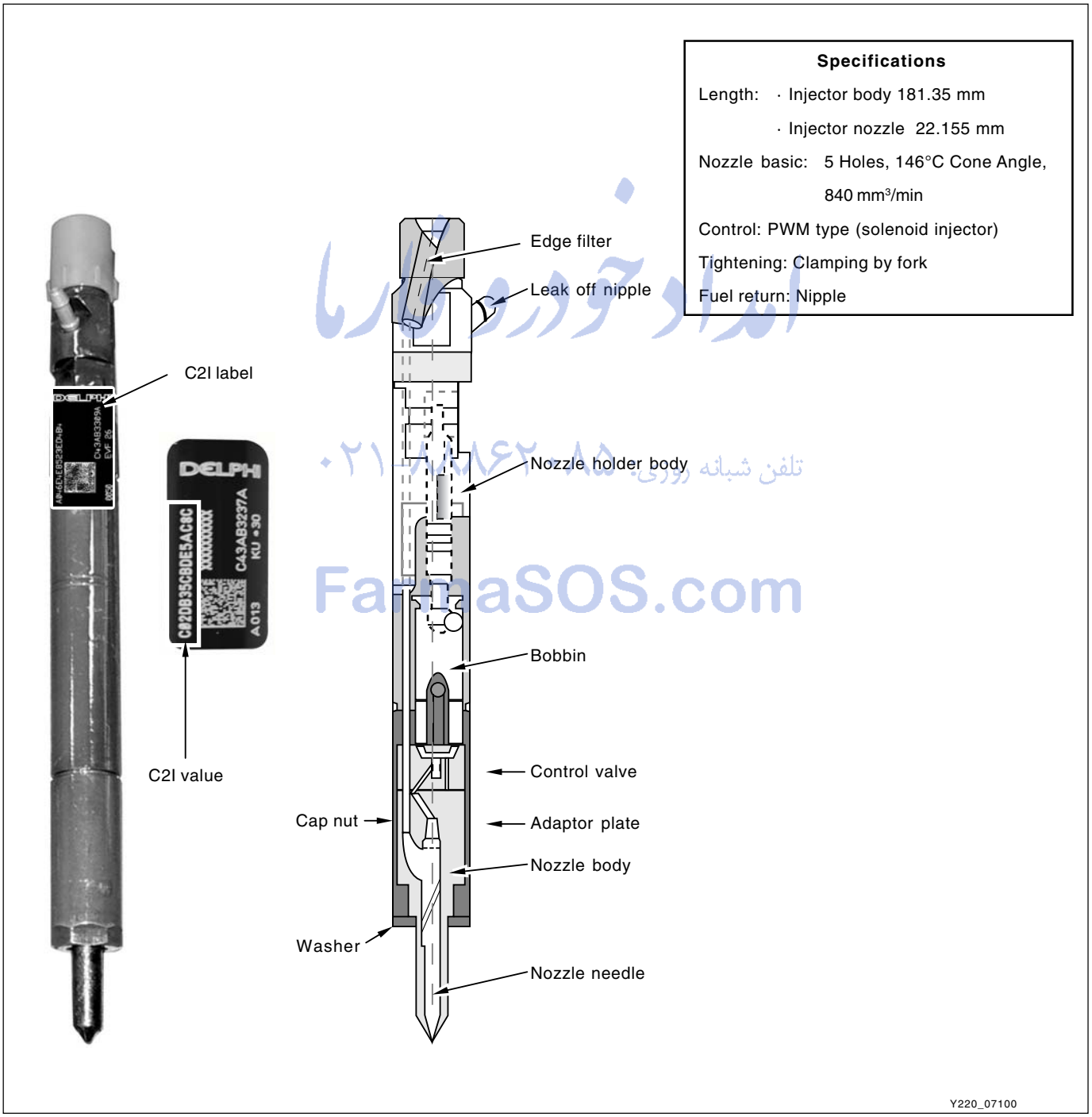

امداد خودرو فارما
تلفن شبانه روزی: ۰۲۱-۸۸۸۴۸۶۲۰
FarmaSOS.com

The maximum injection pressures are approximately 1,600 bar. The forces to be overcome in order to lift the needle of the injector are therefore very large. Because of this, it is impossible to directly control the injector by using an electro-magnetic actuator, unless very high currents are used, which would be incompatible with the reaction times required for the multiple injections. The injector is therefore indirectly controlled by means of a valve controlling the pressurizing or discharging of the control chamber located above the needle:

- When the needle is required to lift (at the start of injection): the valve is opened in order to discharge the control chamber into the back leak circuit.
- When the needle has to close (at the end of injection): the valve closes again so that pressure is re-established in the control chamber.

Valve

In order to guarantee response time and minimum energy consumption:

- The valve must be as light as possible.
- The valve stroke must be as short as possible.
- The effort needed to move the valve must be minimal, which means that the valve must be in hydraulic equilibrium in the closed position.

Spring pressure ensures contact between the valve and its seat. To lift the valve, it is therefore required to overcome the force being applied by this spring.

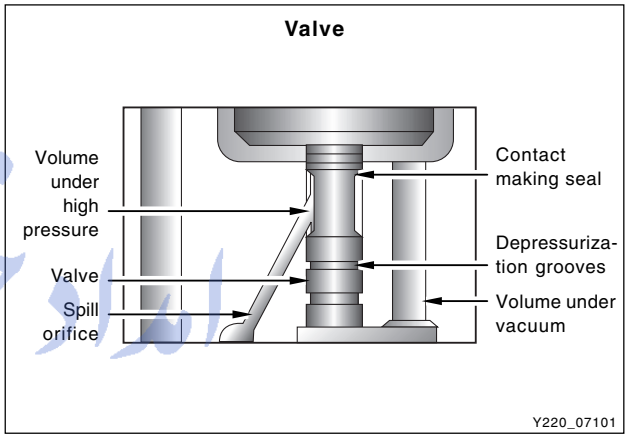

Spacer

The spacer is situated underneath the valve support. It integrates the control chamber and the three calibrated orifice which allow operation of the injector. These orifices are:

- The injector supply orifice (Nozzle Path Orifice: NPO)
- The control chamber discharge orifice (Spill Orifice: SPO)
- The control chamber filling orifice (Inlet Orifice: INO)

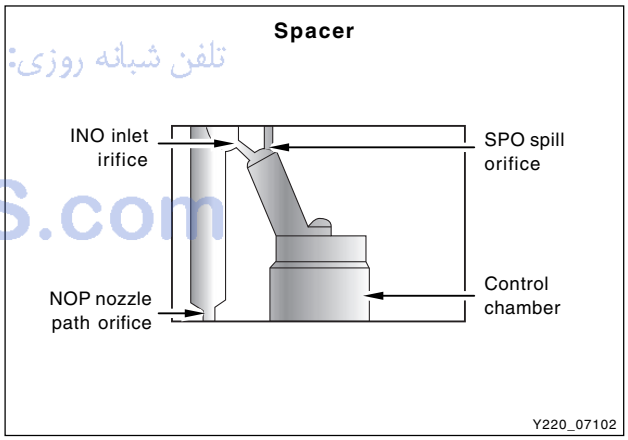

FarmaSos.com

CHANGED BY	
EFFECTIVE DATE	
AFFECTED VIN	

▶ Principle of Operation

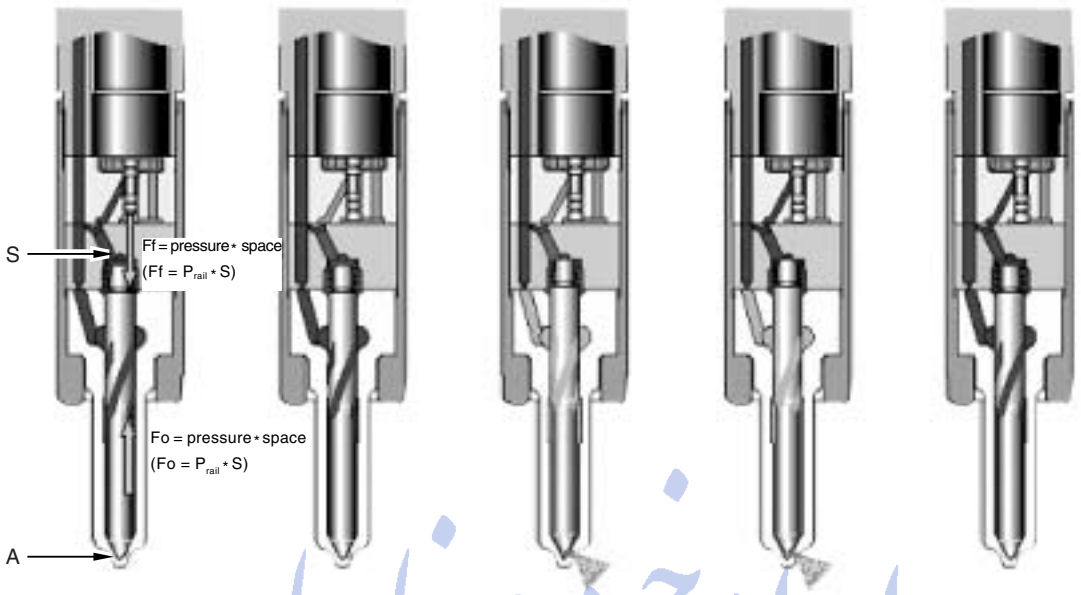

Valve closed	Valve opens	Valve open	Valve closes	Valve closed
Needle closed	Needle closed	Needle opens	Needle open	Needle closed
No injection	No injection	Start of injection	End of injection	No injection

Y220_07103

امداد خودرو فارما
تلفن شبانه روزی: ۰۲۱-۸۸۸۶۲۰۸۵

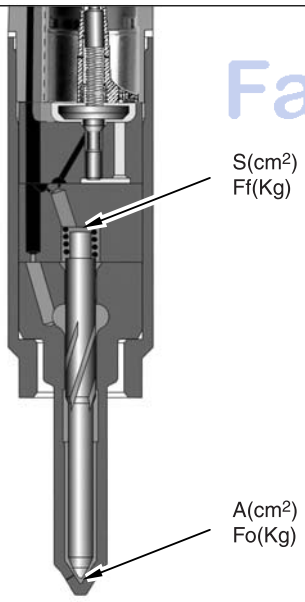

* S: The area of the flat upper surface of the injector's needle
* A: The area of the needle surface situated above the section of contact between the needle and its seat
* Ff: The force applied by the fuel onto section "S"
* Fo: The force applied by the fuel onto section "A"

Y220_07104

FarmaSOS.com

Injector at rest

The valve is closed. The control chamber is subject to the rail pressure.

The pressure force applied by the fuel onto the needle is:

$$Ff = S * P_{rail}$$

The needle is closed and hence there is no fluid circulation through the NPO orifice. While static, the nozzle produces no pressure drop. The cone of the needle is therefore subject to the rail pressure. The force applied by the fuel to the needle is:

$$Fo = A * P_{rail}$$

Since Ff > Fo, the needle is held in the closed position. There is no injection.

Solenoid valve control

When the solenoid valve is energized, the valve opens. The fuel contained in the control chamber is expelled through the discharge orifice known as the Spill Orifice (SPO).

As soon as Ff > Fo, the needle remains held against its seat and there is no injection.

Start of injection

As soon as Ff < Fo, or in other words:

$$P_{control} < P_{rail} * A/S$$

The needle lifts and injection begins. As long as the valve is open, the injector's needle remains lifted. When injection begins, fuel circulation is established to feed the injector. The passage of the fuel through the inlet orifice of the injector (similar to a nozzle) leads to a pressure drop which depends on the rail pressure.

When the rail pressure is at its highest (1600 bar), this pressure drop exceeds 100 bar. The pressure applied to the cone of the needle (the injection pressure) is therefore lower than the rail pressure.

End of injection

As soon as the solenoid valve is de-energized, the valve closes and the control chamber is filled. Since the needle is open, the thrust section areas situated on either side of the needle is therefore to apply different pressures to each of these faces. The pressure in the control chamber cannot exceed the rail pressure, so it is therefore necessary to limit the pressure applied to the needle's cone. This pressure limitation is achieved by the NPO orifice which produces a pressure drop when fuel is passing through it.

$$Prail * S \geq (Prail - \triangle P) * S$$

When static, this pressure drop is zero. When the pressure in the control chamber becomes higher than the pressure applied to the needle's cone, the injection stops.

امداد خودرو فارما
تلفن شبانه روزی: ۰۲۱-۸۸۸۶۲۰۸۵
FarmaSOS.com

▶ Injecting Process

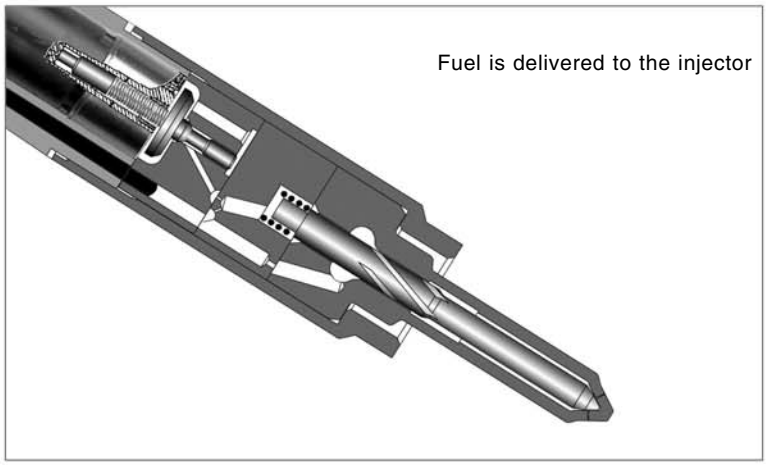

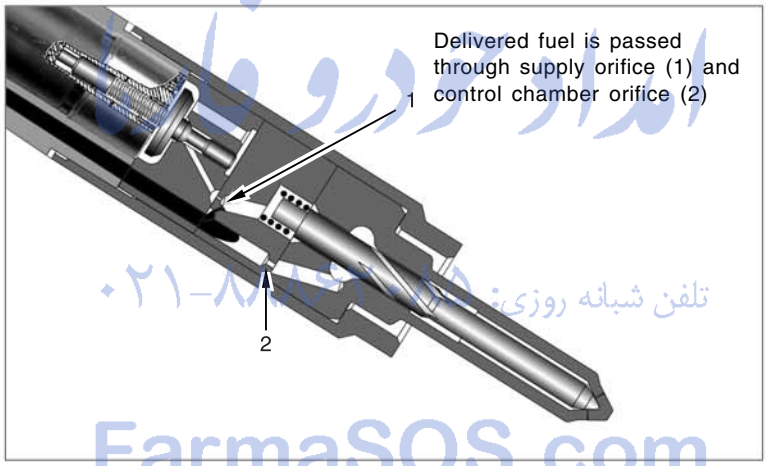

FarmaSOS.com

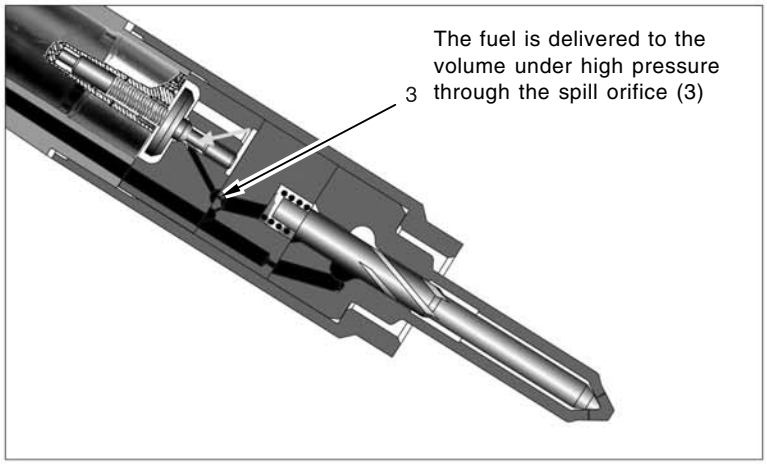

Y220_07105

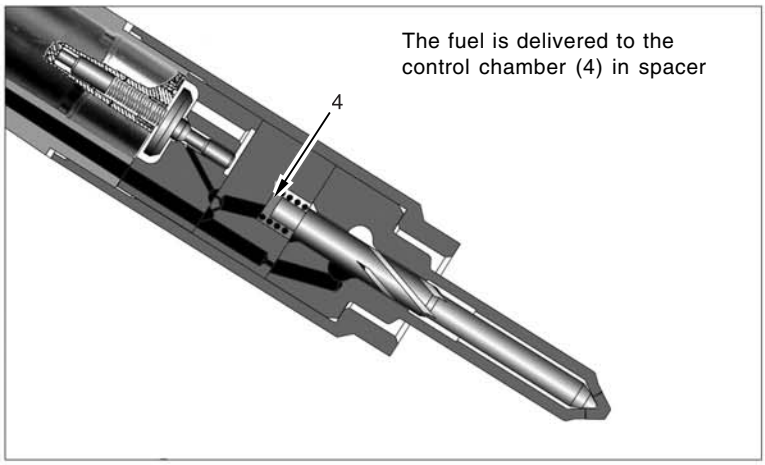

The fuel is delivered to the control chamber (4) in spacer

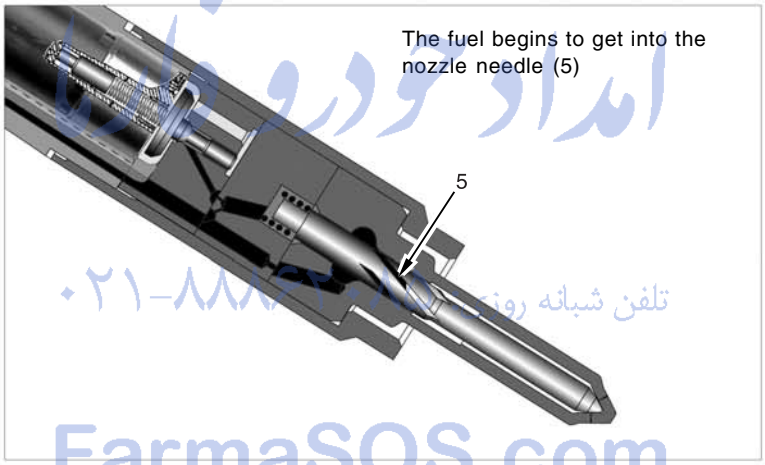

The fuel begins to get into the nozzle needle (5)

امداد خودرو فارما
تلفن شبانه روزی ۰۲۱-۸۸۶۲۰۰۰۰
FarmaSOS.com

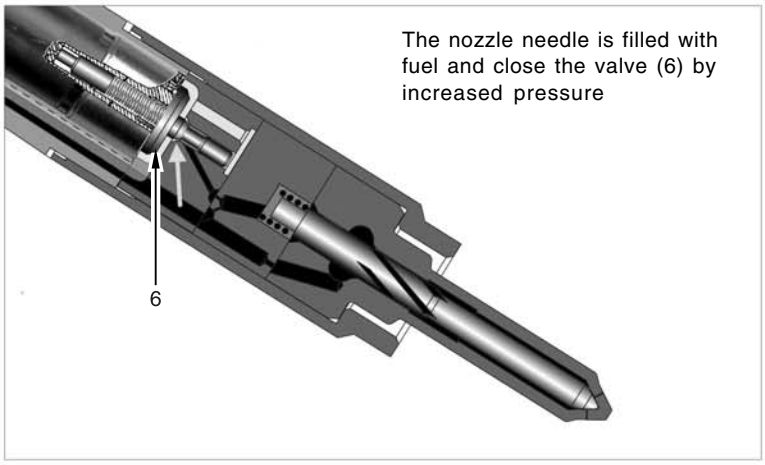

The nozzle needle is filled with fuel and close the valve (6) by increased pressure

Y220_07106

CHANGED BY	
EFFECTIVE DATE	
AFFECTED VIN	

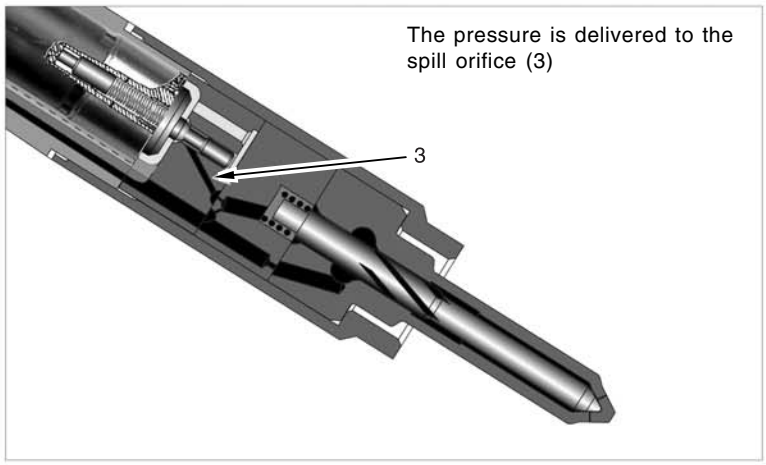

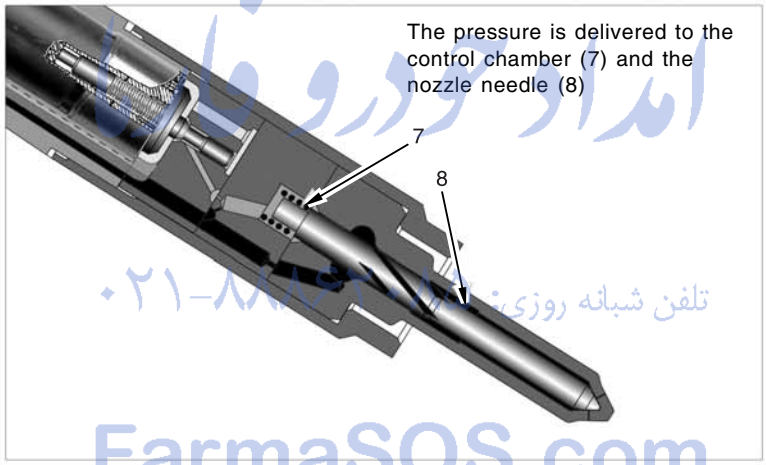

امداد خودرو
تلفن شبانه روزی: ۰۲۱-۸۸۸۶۰۰۰۰
FarmaSOS.com

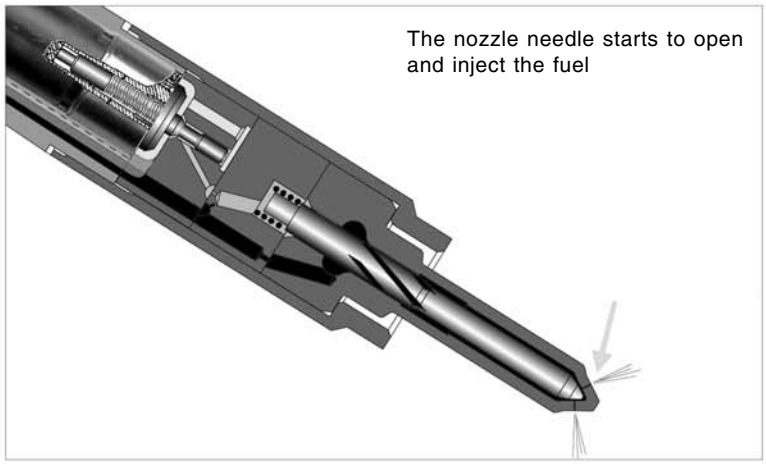

Y220_07107

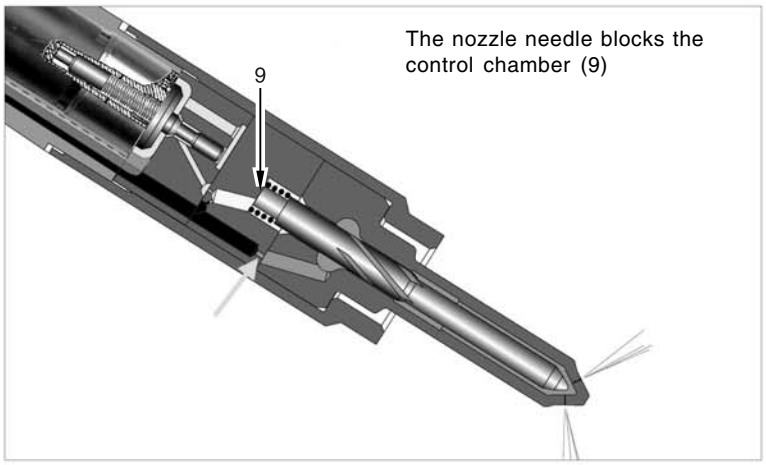

The nozzle needle blocks the control chamber (9)

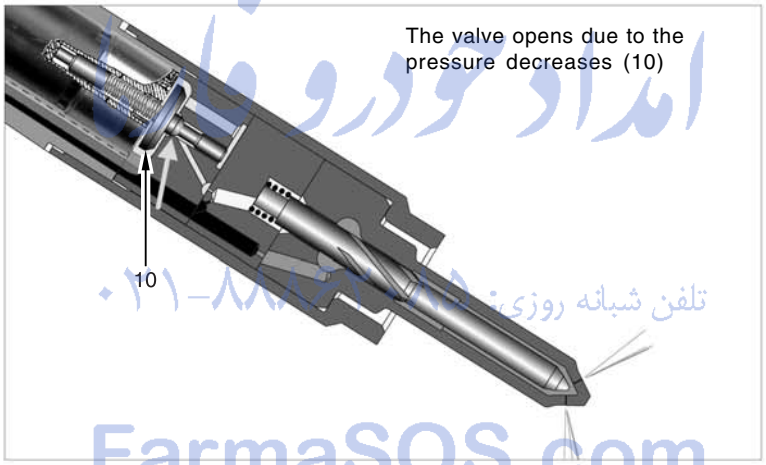

The valve opens due to the pressure decreases (10)

امداد خودرو فارما
تلفن شبانه روزی: ۰۲۱-۸۸۸۴۹۸۸۵
FarmaSOS.com

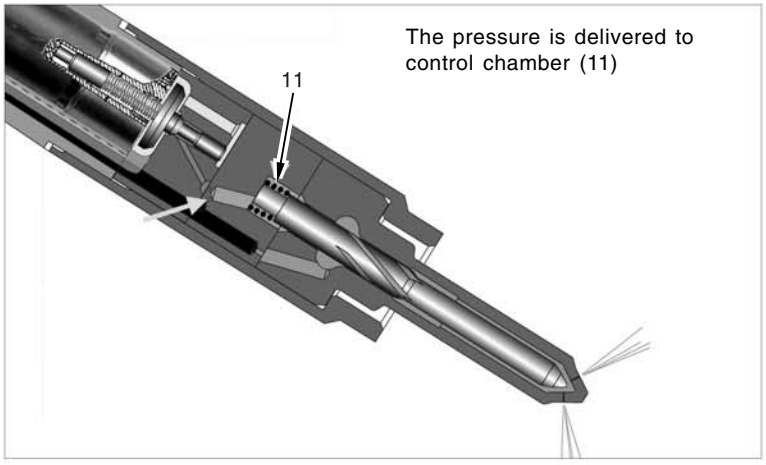

The pressure is delivered to control chamber (11)

Y220_07108

CHANGED BY	
EFFECTIVE DATE	
AFFECTED VIN	

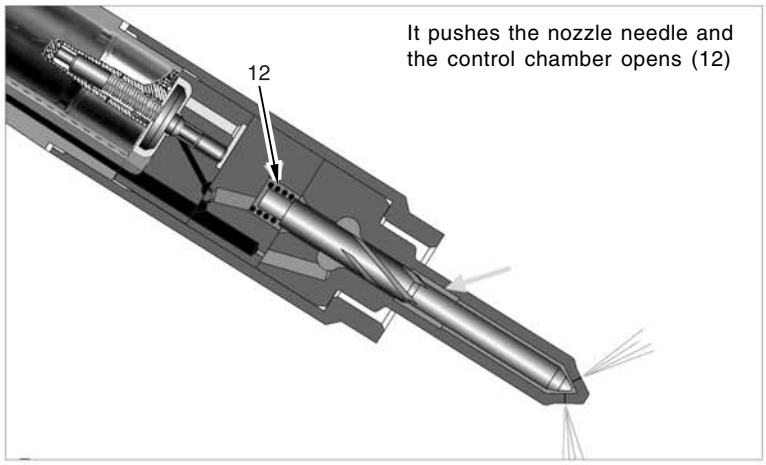

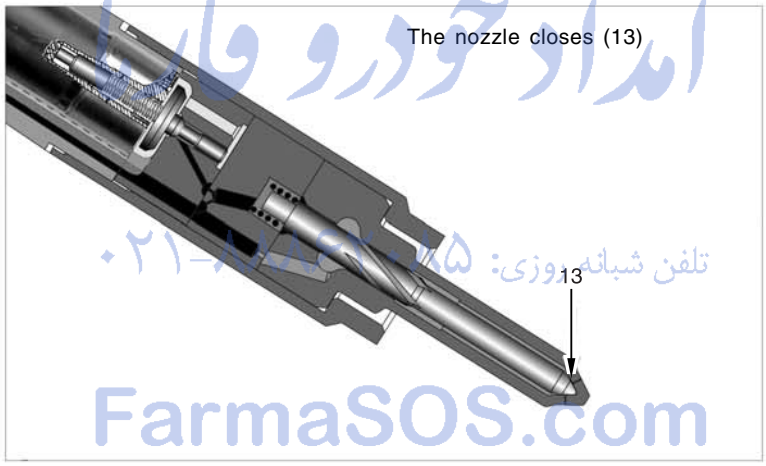

امداد خودرو فارما
تلفن شبانه‌روزی: ۰۲۱-۸۸۸۳۰۰۸۵
FarmaSOS.com

Y220_07109

▶ Fuel pressure

Fuel pressure

- Minimum operating pressure: start injection over 100 bar
- Maximum operating pressure: 1,600 bar (max. operating pressure in normal conditions)
- Max overpressure: 2,100 bar

Maximum fuel volume at each injector cycle

- Pilot Injection ≤ 5 mm^3
- Main Injection ≤ 85 mm^3 (within 200 ~ 1,600 bar)

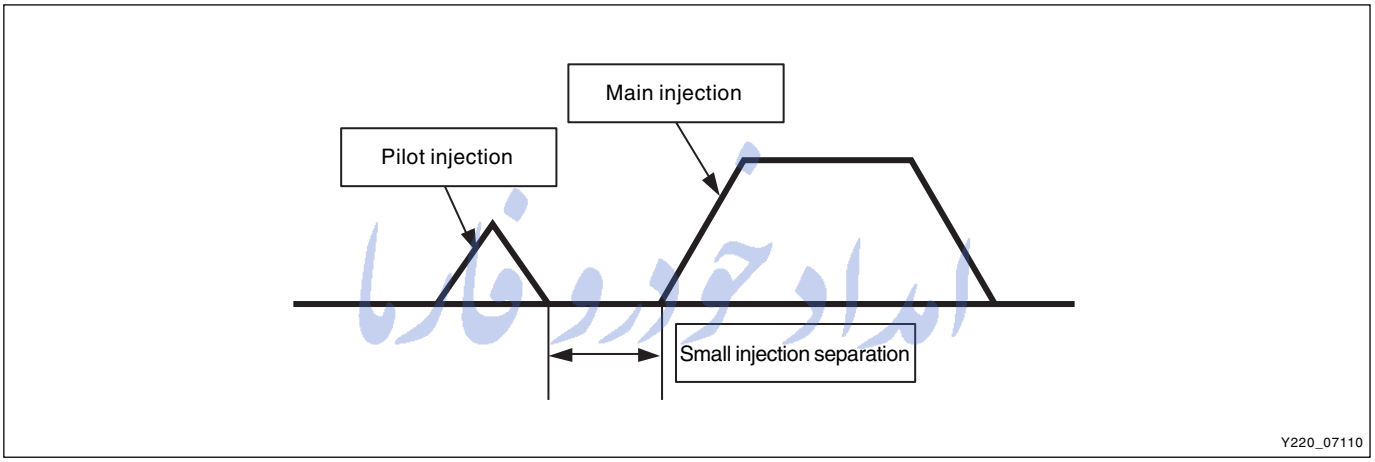

ایراد خودرو فارما
تلفن شبانه روزی: ۰۲۱-۸۸۸۶۲۰۸۵
FarmaSOS.com

- Small injection separation: min. 200㎲
  (duration between the end of pilot injection and start of main injection)

- Opening Delay
  : Delayed time from applying operating voltage to start of injection

- Adjustment of feedback injection volume: C2I

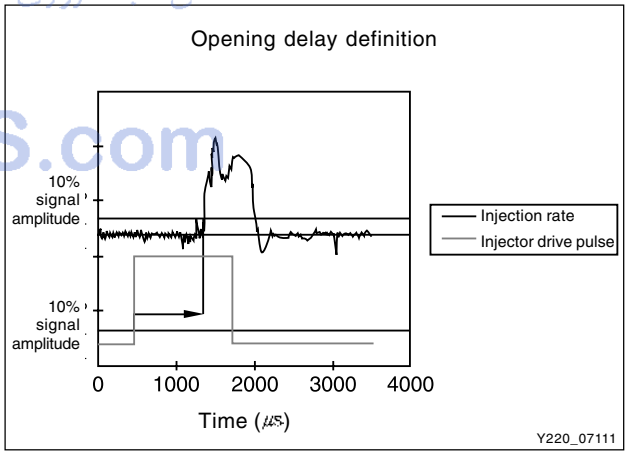

CHANGED BY	
EFFECTIVE DATE	
AFFECTED VIN	

▶ Injector control

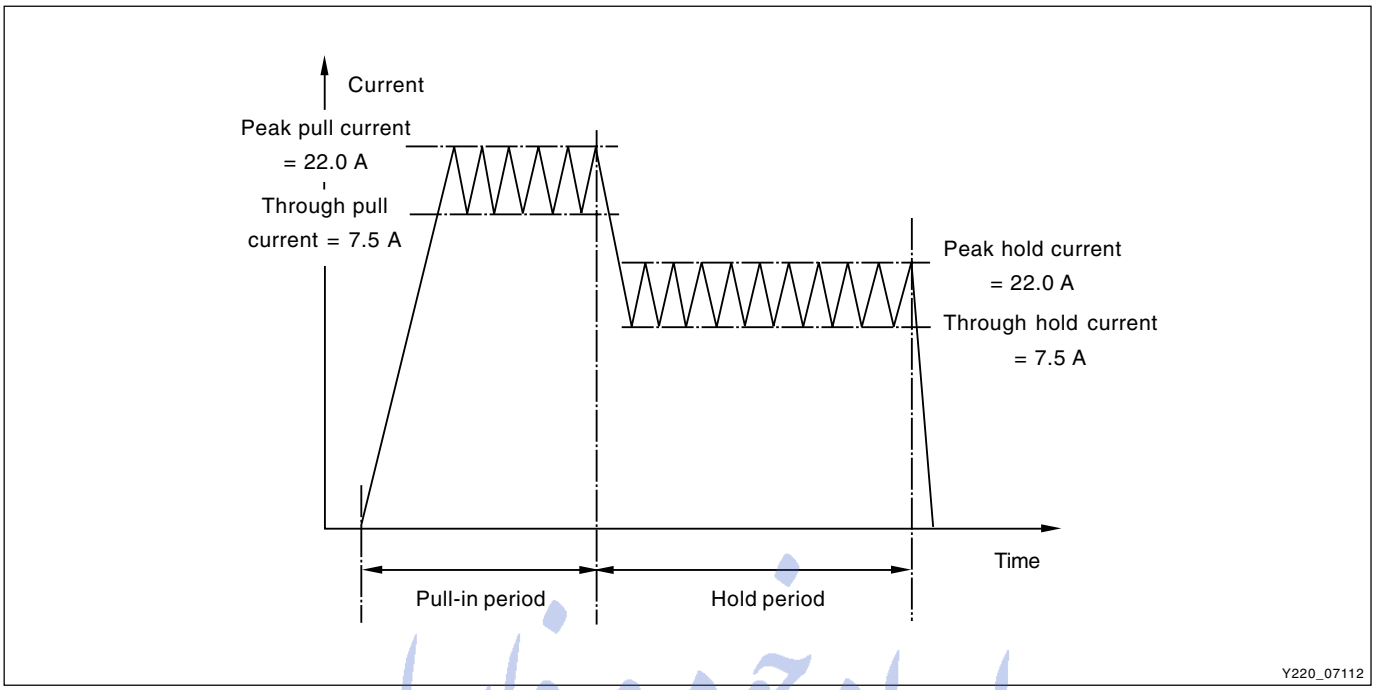

The control current of the coil takes the following form:

The low current allows the Joule effect losses in the ECU and injector to be reduced. The call current is higher than the hold current because during the hold phase.

- The air gap between the valve and the coil is reduced and the electromagnetic force to be applied to the valve can thus be reduced. It is no longer necessary to overcome the valve inertia.

امداد خودرو فارا
تلفن شبانه روزی: ۰۲۱-۸۸۸۶۲۰۸۵
FarmaSOS.com

Note

Joule Effect: ***The principle that the heat produced by an electric current is equal to the product of the resistance of the conductor, the square of the current, and the time for which it flows.***

I: current (A)

R: resistance (Ω)

T: time (sec)

H: calori (cal)

Heat capacity (H) = 0.24 I^2RT

▶ Fuel Injection

Other than conventional diesel engine, common diesel engine use two steps injection as follows:

- Pilot Injection
- Main Injection

In above two step injection, the fuel injection volume and injection timing is calibrated according to fuel pressure and fuel temperature.

Pilot injection

Before starting main injection, a small amount of fuel is injected to help proper combustion. This injection is for reducing the engine noise and vibration.

In other words, it makes the pressure increase in combustion chamber during combustion smooth to reduce the engine noise and vibration (suppressing the surging). Basic values for pilot injection are adjusted according to the coolant temperature and intake air pressure.

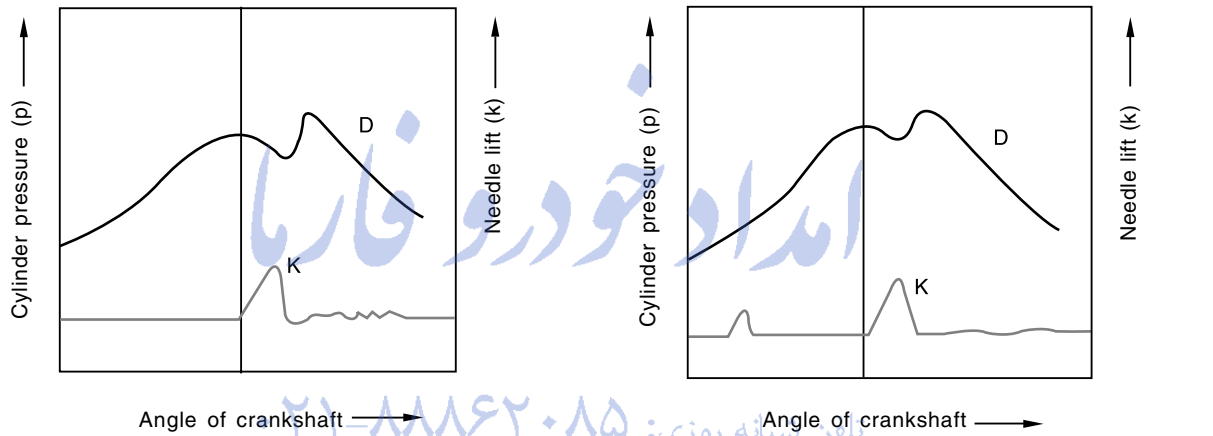

<Characteristic curve of discharge without pilot injection> <Characteristic curve of discharge with pilot injection>

Y220_07113

امداد خودرو فارما ۰۲۱-۸۸۸۶۲۰۸۵ تلفن همراه روزی FarmaSOS.com

Main injection

Actual output from engine is achieved by main injection.

The main injection determines the pilot injection has been occurred, then calculates the injection volume. Accelerator pedal sensor, engine rpm, coolant temperature, intake air temperature and atmospheric pressure are basic date to calculate the fuel injection volume in main injection.

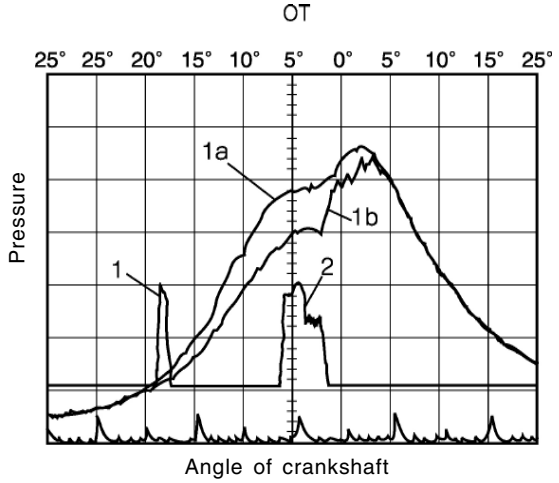

1. Pilot injection
2. Main injection

1a. Ignition pressure with pilot injection

2a. Ignition pressure without pilot injection

<Characteristic curve of combustion chamber pressure during pilot injection>

Y220_07114

CHANGED BY	
EFFECTIVE DATE	
AFFECTED VIN	

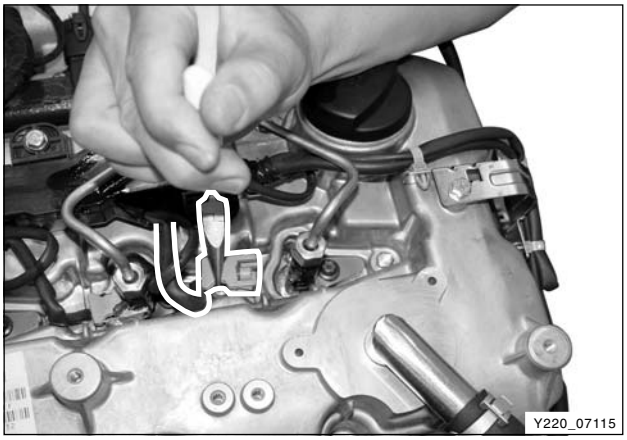

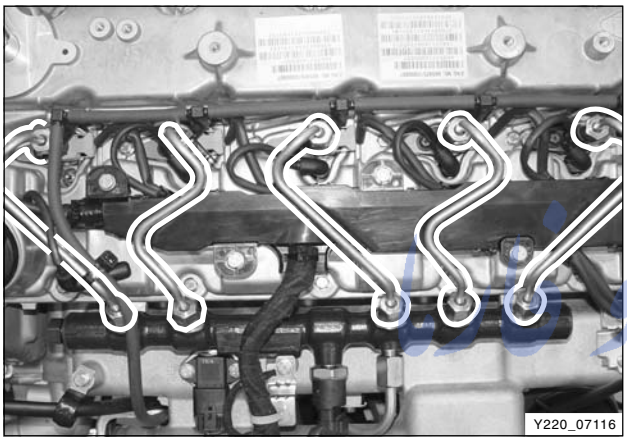

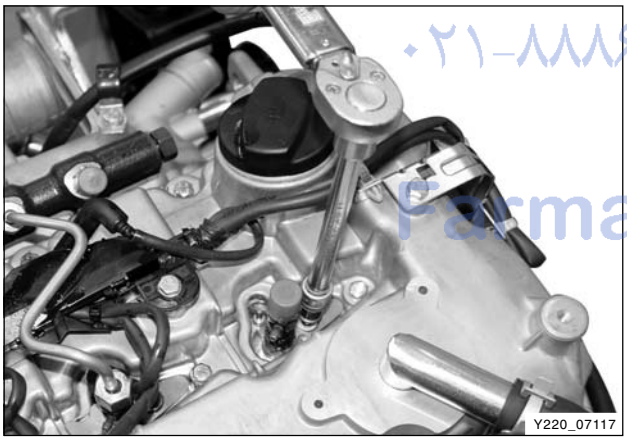

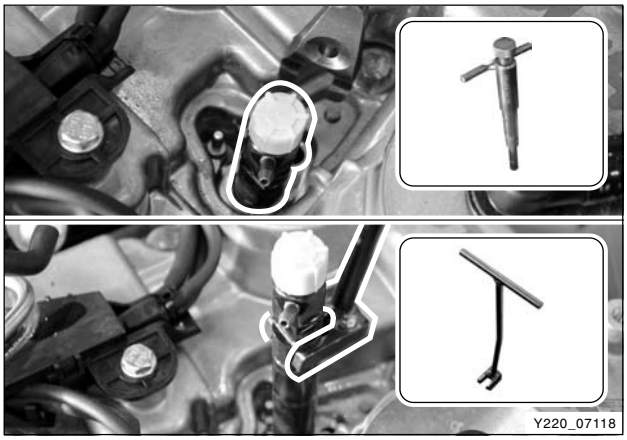

Removal and Installation

※ Preceding Work: Removal of engine cover

1. Disconnect the injector return hose.

   Notice

   Plug the openings with sealing caps.

2. Remove the relevant connector for the injector.

3. Unscrew the bolts and remove the fuel pipes.

   Installation Notice

Tightening torque	40 ± 10 Nm

   Installation Notice

   - ***Replace the fuel pipes with new ones.***
   - ***Plug the openings of the common rail with sealing caps.***

4. Unscrew the injector holder bolts.

   Installation Notice

Tightening torque	9 ± 1.0 Nm
	180° ± 10°

   Replace the bolts and washer with new ones.

5. Disconnect the injector holder.

6. Remove the injectors with a special tool.

   Notice

   - ***Plug the openings of the injectors with sealing caps.***
   - ***Pull the dropped washer out from the engine with a special tool.***
   - ***Clean carbon deposite in hole with specific tool.***

7. Install in the reverse order of removal.
8. Do not forget to update C2I with Scan 100 and cross old C2I on label fitted on engine.

   Notice

   Replace the copper washer, holder bolts and washer and fuel supply pipes with new ones.

امداد خودرو
۰۲۱-۸۸۸۶۲۰۸۵ تلفن شبانه روزی
FarmaSOS.com

ECU Wiring Diagram

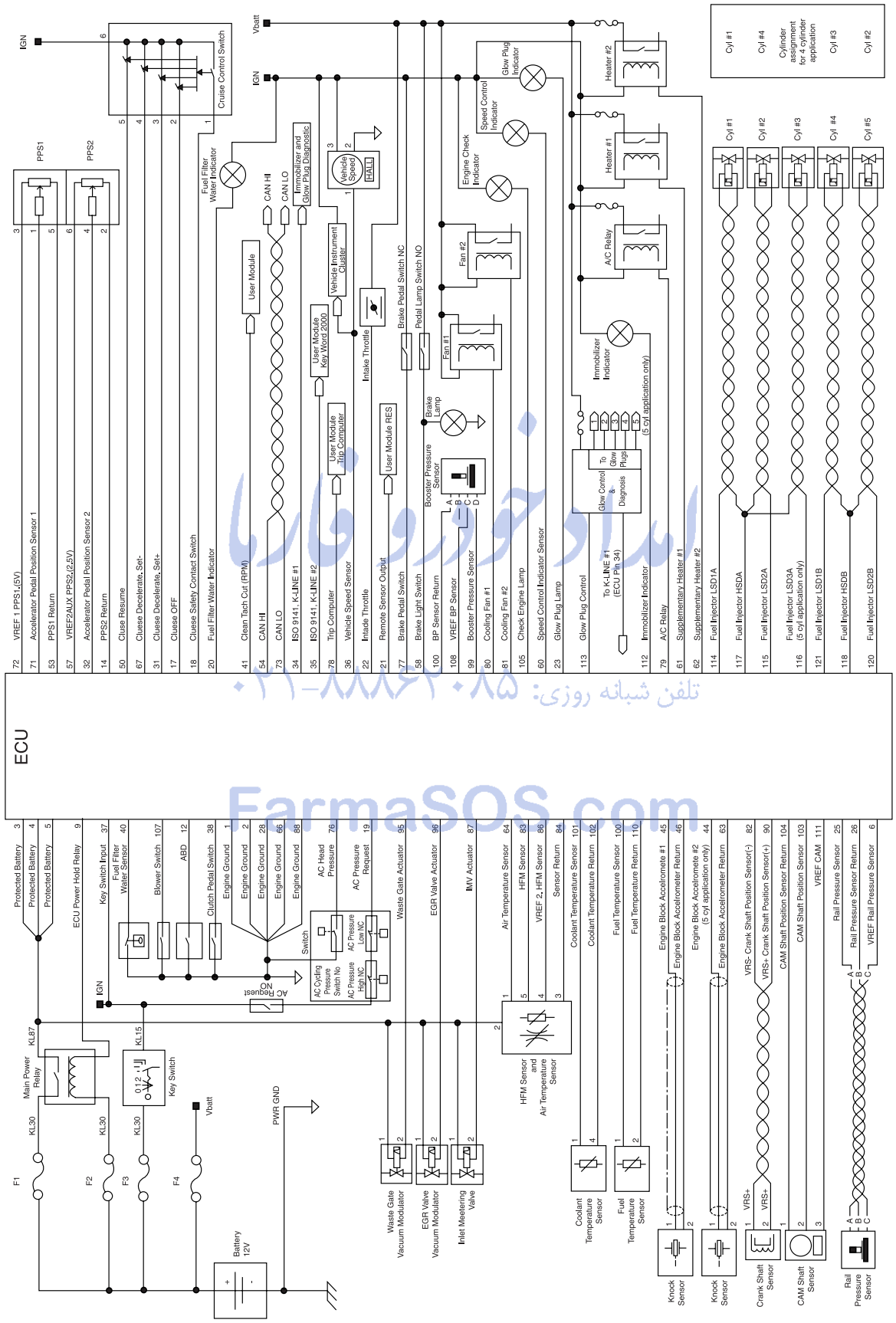

FarmaSOS.com

CHANGED BY	
EFFECTIVE DATE	
AFFECTED VIN	

MEMO

امداد خودرو فارما
تلفن شبانه روزی: ۰۲۱-۸۸۸۶۲۰۸۵
FarmaSOS.com

SECTION DI08

ENGINE CONTROL SYSTEM

امداد خودرو فارما

تلفن شبانه روزی: ۰۲۱-۸۸۸۶۲۰۸۵

FarmaSOS.com

SECTION DI08

ENGINE CONTROL SYSTEM

Table of Contents

SENSORS FOR DIAGNOSIS DI08-3

Engine ECU and other components DI08-3
Top view DI08-4
Side view DI08-5

ENGINE CONTROL SYSTEM DI08-6

ECU DI08-6
Fuel pressure control DI08-12
Fuel injecstion control DI08-13
Fuel flow control DI08-14
Individual injector calibration (C2I) DI08-19
Minimum drive pulse (MDP) learning DI08-21

FarmaSOS.com

CHANGED BY	
EFFECTIVE DATE	
AFFECTED VIN	

امداد خودرو فارما

تلفن شبانه روزی: ۸۸۸۶۲۰۸۵-۰۲۱

FarmaSOS.com

SENSORS FOR DIAGNOSIS

ENGINE ECU AND OTHER COMPONENTS

ECU/barometric sensor



Camshaft position sensor



Fuel filter (water sensor)



Accelerator pedal sensor

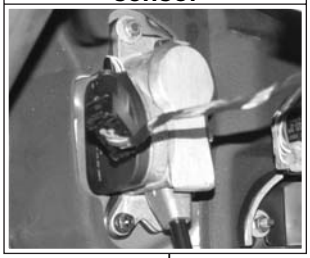

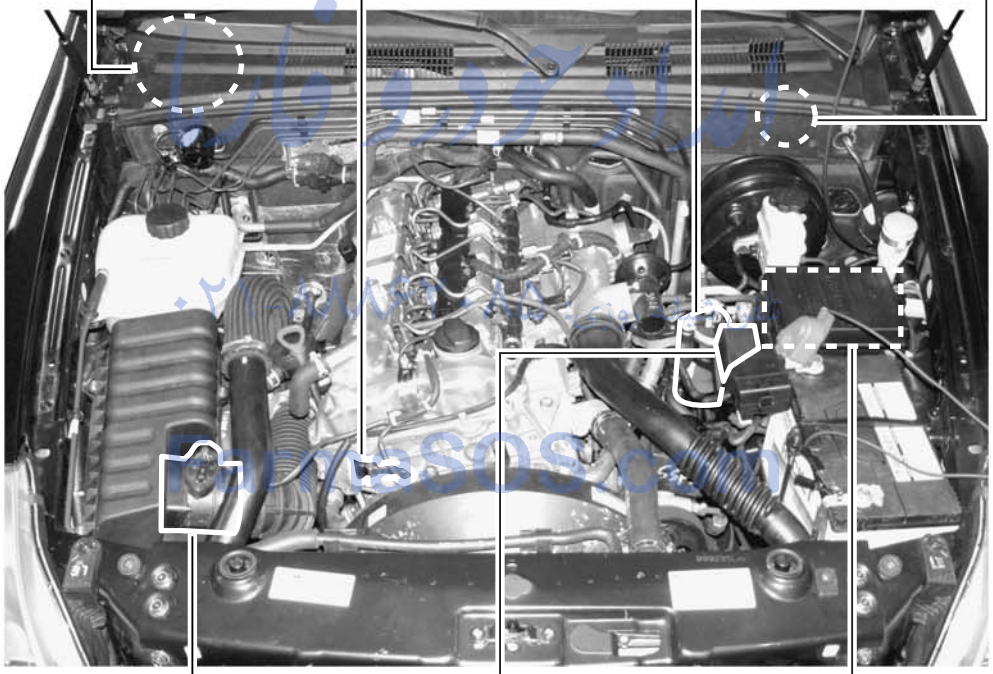

HFM sensor / intake air temperature sensor



Preheating relay



PTC Box

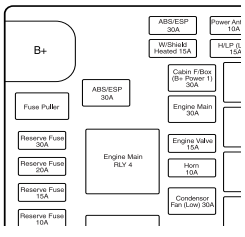

Y220_08001

CHANGED BY	
EFFECTIVE DATE	
AFFECTED VIN	

TOP VIEW

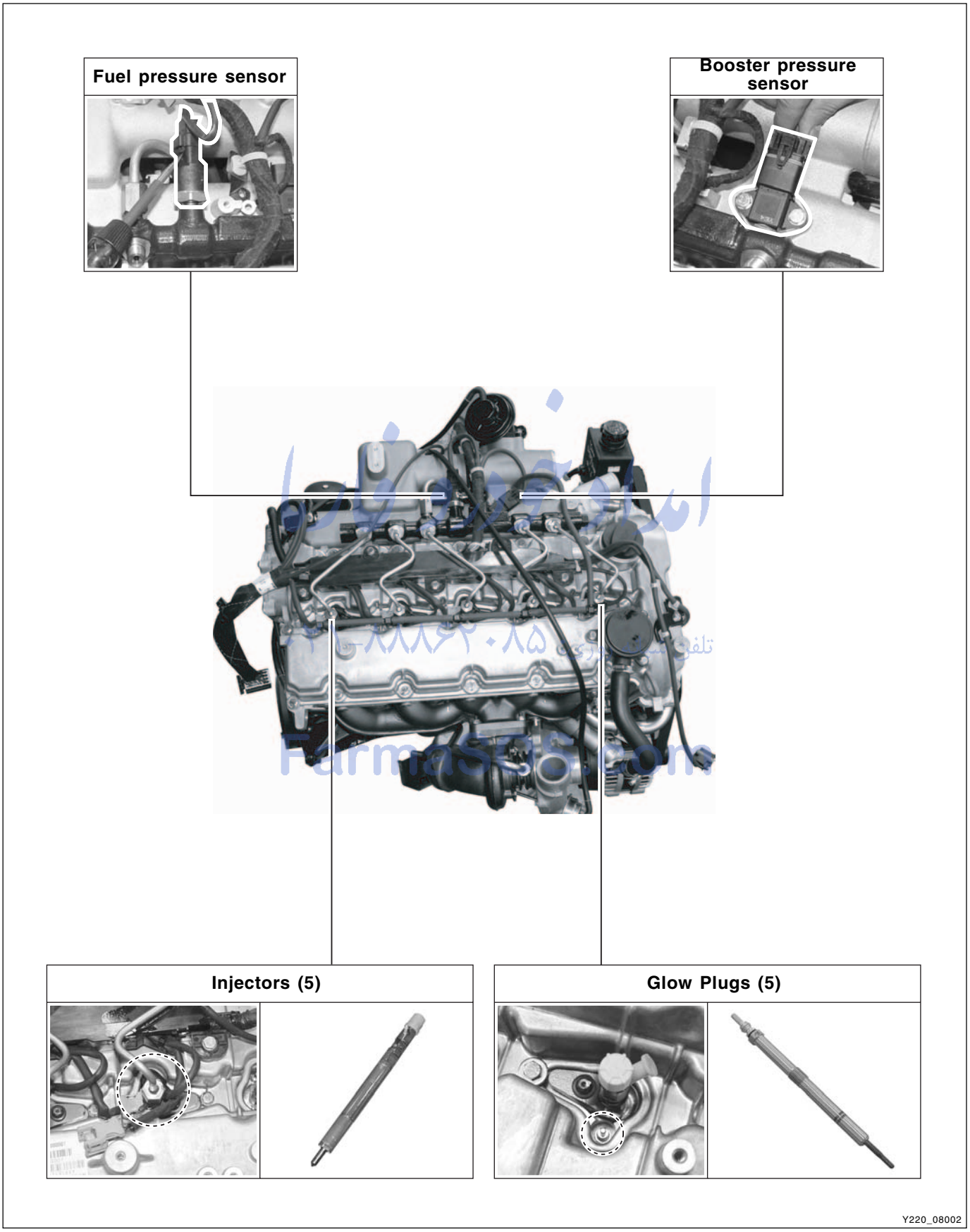
Fuel pressure sensor
Booster pressure sensor
Injectors (5)
Glow Plugs (5)
Y220_08002

SIDE VIEW

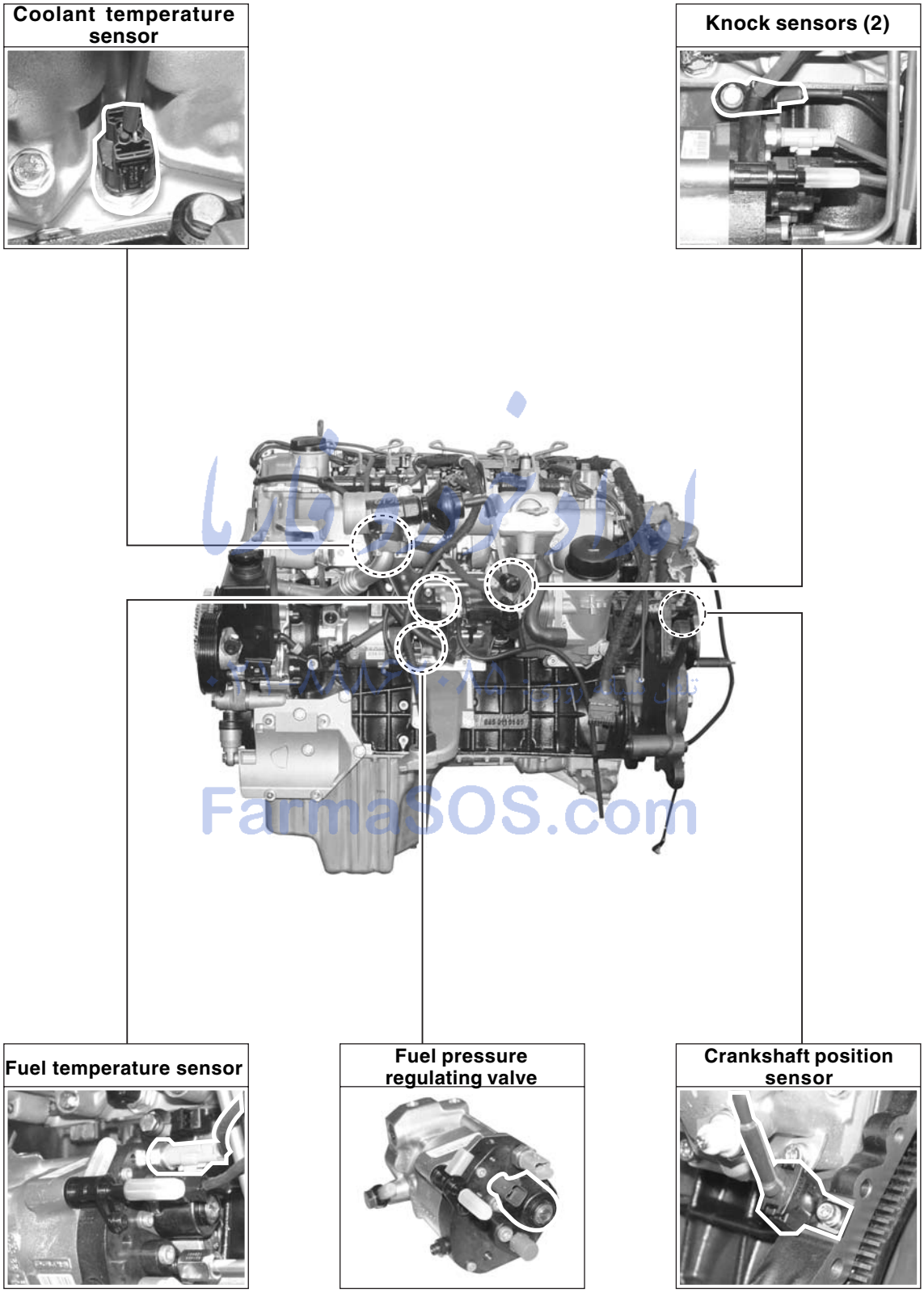

FarmaSOS.com

CHANGED BY	
EFFECTIVE DATE	
AFFECTED VIN	

ENGINE CONTROL SYSTEM

ECU

According to input signals from various sensors, engine ECU calculates driver's demand (position of the accelerator pedal) and then controls overall operating performance of engine and vehicle on that time.

ECU receives signals from sensors through data line and then performs effective engine air-fuel ratio controls based on those signals.

Engine speed is measured by crankshaft speed (position) sensor and camshaft speed (position) sensor determines injection order and ECU detects driver's pedal position (driver's demand) through electrical signal that generated by variable resistance changes in accelerator pedal sensor.

Air flow (hot film) sensor detects intake air volume and then transmits to ECU. Especially, the engine ECU controls the air-fuel ratio by recognizing instant air volume changes through air flow sensor to pursue low emission gases (EGR valve control). Furthermore, the ECU uses signals from coolant temperature and air temperature sensor, booster pressure sensor and atmospheric pressure sensor as compensation signal to respond to injection start and pilot injection set values and to various operations and variables.

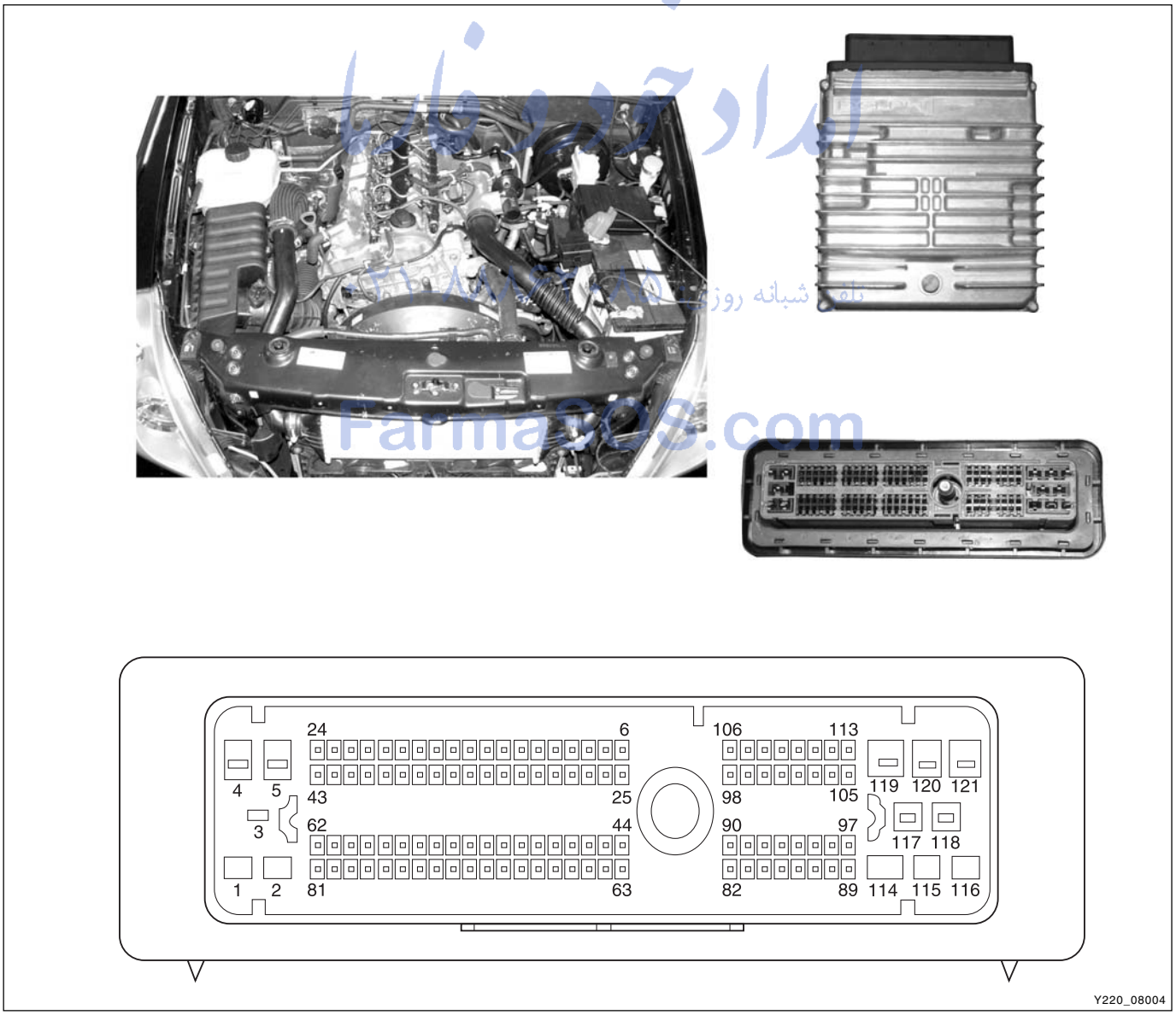

FarmaTOS.com

Pin No.	Description	Pin No.	Description
1	Engine ground	40	Fuel filter water detection sensor
2	Engine ground	41	RPM signal output
3	Main power (IG 1)	42	
4	Main power (IG 1)	43	
5	Main power (IG 1)	44	Knock sensor signal (#2)
6	Rail pressure sensor power supply	45	Knock sensor signal (#1)
7		46	Knock sensor ground (#1)
8		47	
9	ECU power hold relay	48	
10		49	
11		50	Auto cruise result signal
12	ABD signal	51	
13		52	
14	ACC 2 sensor ground	53	ACC 1 sensor ground
15		54	CAN- H1
16		55	
17	Auto cruise OFF	56	
18	Auto cruise safety switch	57	ACC 2 sensor power supply
19	A/C pressure signal	58	Brake lamp switch
20	Fuel filter water detection warning lamp	59	
21	Remote starter output	60	Vehicle speed indication lamp
22	Glow plug control	61	Preheater #1
23	Glow plug warning lamp	62	Preheater #2
24		63	Knock sensor ground (#2)
25	Rail pressure sensor signal	64	HFM sensor (air temperature sensor)
26	Rail pressure sensor ground	65	
27		66	Engine ground
28	Engine ground	67	Auto cruise deceleration signal
29		68	
30		69	
31	Auto cruise acceleration signal	70	
32	ACC 2 sensor signal	71	ACC 1 sensor signal
33		72	ACC 1 sensor power supply
34	K-LINE #1	73	CAN -LO
35	K-LINE #2	74	
36	Vehicle speed sensor signal input	75	
37	IG 1	76	A/C cycling pressure switch
38	Clutch pedal switch	77	Brake pedal switch
39		78	Trip computer

امداد خودرو فارا
FarmaSOS.com

CHANGED BY	
EFFECTIVE DATE	
AFFECTED VIN	

Pin No.	Description	Pin No.	Description
79	A/C relay	101	Coolant temperature signal
80	Cooling fan LOW	102	Coolant temperature sensor ground
81	Cooling fan HIGH	103	Camshaft position sensor signal
82	Crankshaft position sensor (-)	104	Camshaft position sensor ground
83	HFM sensor (air mass sensor)	105	Engine check warning lamp
84	HFM sensor (ground)	106	
85		107	Blower switch
86	HFM sensor (power supply)	108	Booster pressure sensor power supply
87	IMV (fuel pressure regulating valve)	109	Fuel temperature sensor signal
88	Engine ground	110	Fuel temperature sensor ground
89		111	Camshaft position sensor power supply
90	Crankshaft position sensor (+)	112	Immobilizer
91		113	Engine check warning lamp
92		114	Injector #1
93		115	Injector #4
94		116	Injector #3
95	Waste gate actuator	117	Injector ground (#1, 3, 4)
96	EGR valve	118	Injector ground (#2, 5)
97		119	
98		120	Injector #5
99	Booster pressure sensor signal	121	Injector #2
100	Booster pressure sensor ground		

امداد خودرو فارما
۰۲۱ ۸۸۸۶۲۰۸۸ تلفن شبانه روزی:
FarmaSOS.com

▶ ECU Inputs·Outputs

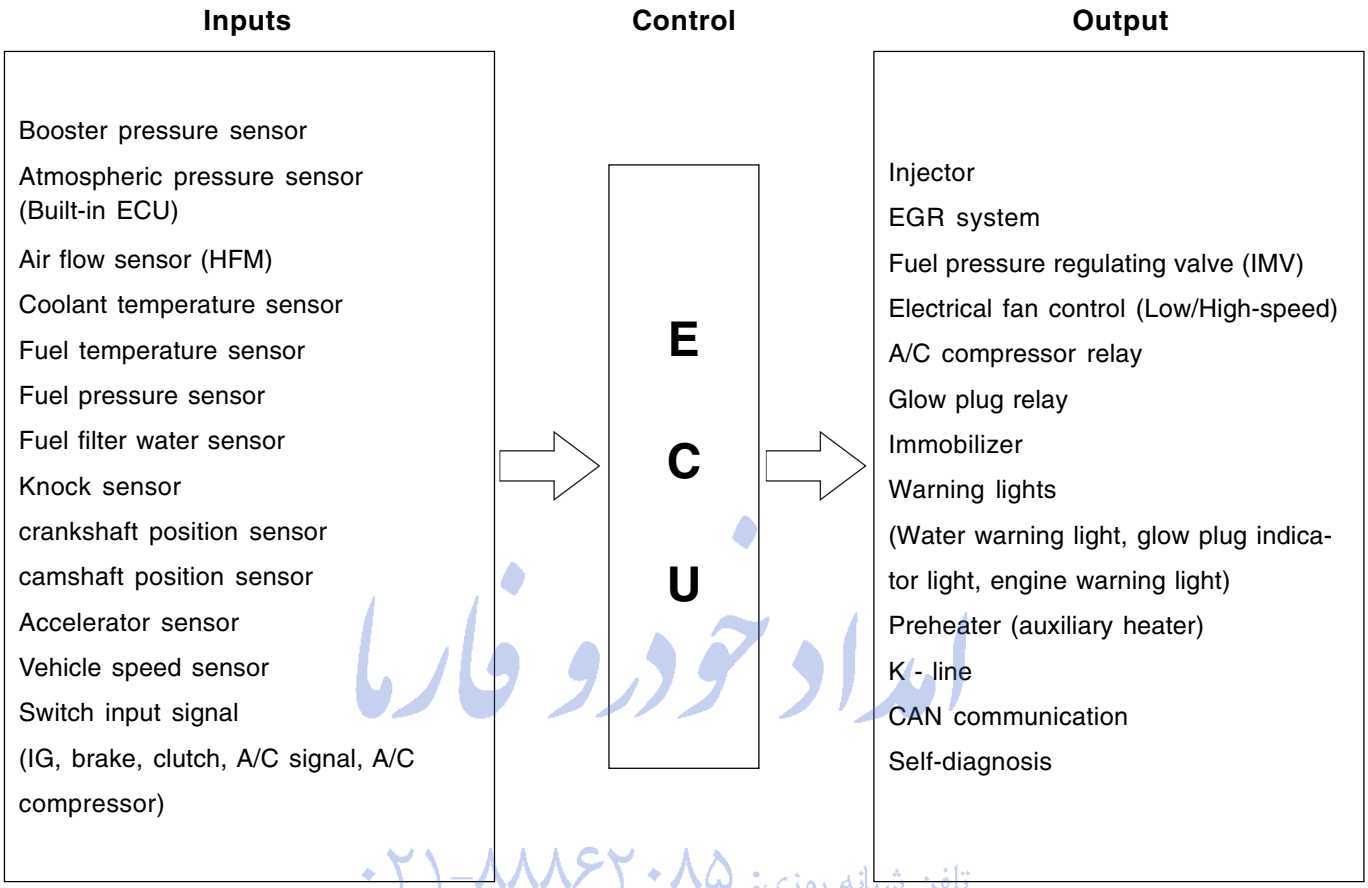

امداد خودرو فارما
تلفن شبانه روزی: ۰۲۱-۸۸۸۶۲۰۸۵

▶ Structure and Function of ECU

FarmaSOS.com

Function of ECU

ECU receives and analyzes signals from various sensors and then modifies those signals into permissible voltage levels and analyzes to control respective actuators.

ECU microprocessor calculates injection period and injection timing proper for engine piston speed and crankshaft angle based on input data and stored specific map to control the engine power and emission gas.

Output signal of the ECU microprocessor drives pressure control valve to control the rail pressure and activates injector solenoid valve to control the fuel injection period and injection timing; so controls various actuators in response to engine changes. Auxiliary function of ECU has adopted to reduce emission gas, improve fuel economy and enhance safety, comforts and conveniences. For example, there are EGR, booster pressure control, autocruise (export only) and immobilizer and adopted CAN communication to exchange data among electrical systems (automatic T/M and brake system) in the vehicle fluently. And Scanner can be used to diagnose vehicle status and defectives.

Operating temperature range of ECU is normally -40 ~ +85°C and protected from factors like oil, water and electromagnetism and there should be no mechanical shocks.

To control the fuel volume precisely under repeated injections, high current should be applied instantly so there is injector drive circuit in the ECU to generate necessary current during injector drive stages.

Current control circuit divides current applying time (injection time) into full-in-current-phase and hold-current-phase and then the injectors should work very correctly under every working condition.

▶ Control Function of ECU

- Controls by operating stages
  : To make optimum combustion under every operating stage, ECU should calculate proper injection volume in each stage by considering various factors.
- Starting injection volume control
  : During initial starting, injecting fuel volume will be calculated by function of temperature and engine cranking speed.

  Starting injection continues from when the ignition switch is turned to ignition position to till the engine reaches to allowable minimum speed.
- Driving mode control
  : If the vehicle runs normally, fuel injection volume will be calculated by accelerator pedal travel and engine rpm and the drive map will be used to match the drivers inputs with optimum engine power.

امداد خودرو فارما
تلفن شبانه روزی: ۰۲۱-۸۸۸۶۲۰۸۵
FarmaSOS.com

ECU - Removal and Installation

1. Flip up the front passenger's seat and remove the ECU cover nuts.
2. Remove the ECU bracket nuts.



3. Unscrew the ECU connect bolt and remove the ECU assembly.

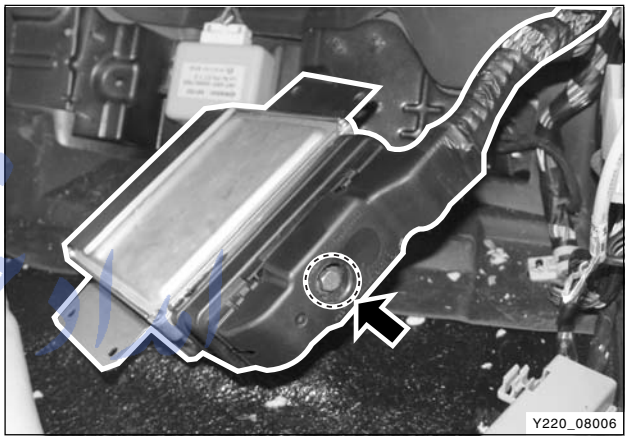

4. Install in the reverse order of removal.
5. Backup the below data with Scan-i when replacing the ECU.
   - Current ECU data
   - Vehicle Identification Number (VIN)
   - Variant coding data
   - Then, input the data into new ECU. For immobilizer equipped vehicle, additional coding operation is necessary.

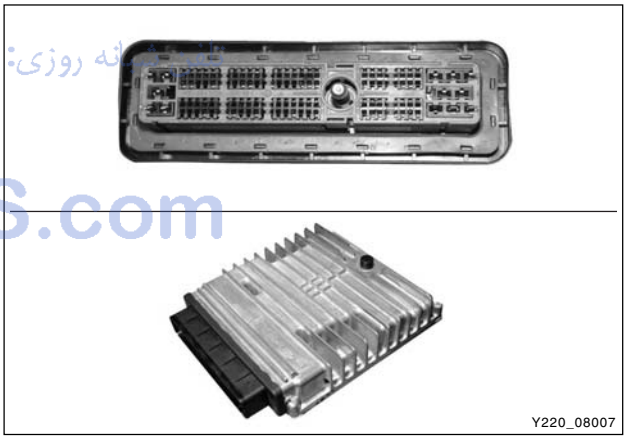

FarmaSOS.com

CHANGED BY	
EFFECTIVE DATE	
AFFECTED VIN	

FUEL PRESSURE CONTROL

▶ Fuel Pressure Control Elements

Pressure control consists of 2 principle modules.

- Determines rail pressure according to engine operating conditions.
- Controls IMV to make the rail pressure to reach to the required value.

Pressure in the fuel rail is determined according to engine speed and load on the engine. The aim is to adapt the injection pressure to the engine's requirements.

- When engine speed and load are high
  : The degree of turbulence is very great and the fuel can be injected at very high pressure in order to optimize combustion.
- When engine speed and load are low
  : The degree of turbulence is low. If injection pressure is too high, the nozzle's penetration will be excessive and part of the fuel will be sprayed directly onto the sides of the cylinder, causing incomplete combustion. So there occurs smoke and damages engine durability.

Fuel pressure is corrected according to air temperature, coolant temperature and atmospheric pressure and to take account of the added ignition time caused by cold running or by high altitude driving. A special pressure demand is necessary in order to obtain the additional flow required during starts. This demand is determined according to injected fuel and coolant temperature.

▶ Fuel Pressure Control

Rail pressure is controlled by closed loop regulation of IMV. A mapping system – open loop – determines the current which needs to be sent to the actuator in order to obtain the flow demanded by the ECU. The closed loop will correct the current value depending on the difference between the pressure demand and the pressure measured.

- If the pressure is lower than the demand, current is reduced so that the fuel sent to the high pressure pump is increased.
- If the pressure is higher than the demand, current is increased so that the fuel sent to the high pressure pump is reduced.

FarmaSOS.com

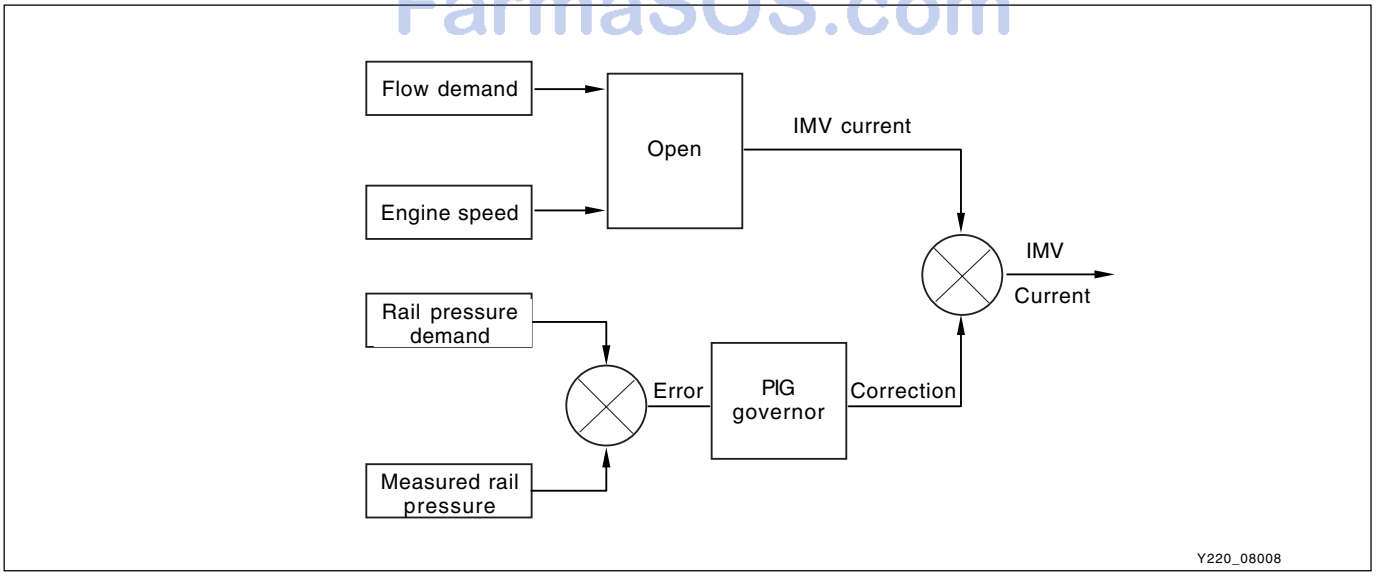

FUEL INJECSTION CONTROL

▶ Fuel Injection Control

Injection control is used in order to determine the characteristics of the pulse which is sent to the injectors.

Injection control consists as below.

- Injection timing
- Injection volume
- Translating fuel injection timing and injection volume into values which can be interpreted by the injector driver.
  - a reference tooth (CTP)
  - the delay between this tooth and the start of the pulse (Toff)
  - the pulse time (Ton)

Main injection timing control

The pulse necessary for the main injection is determined as a function of the engine speed and of the injected flow.

The elements are;

- A first correction is made according to the air and coolant temperatures.

  This correction makes it possible to adapt the timing to the operating temperature of the engine. When the engine is warm, the timing can be retarded to reduce the combustion temperature and polluting emissions (NOx). When the engine is cold, the timing advance must be sufficient to allow the combustion to begin correctly.
- A second correction is made according to the atmospheric pressure.

  This correction is used to adapt the timing advance as a function of the atmospheric pressure and therefore the altitude.
- A third correction is made according to the coolant temperature and the time which has passed since starting.

  This correction allows the injection timing advance to be increased while the engine is warming up (initial 30 seconds). The purpose of this correction is to reduce the misfiring and instabilities which are liable to occur after a cold start.
- A fourth correction is made according to the pressure error.

  This correction is used to reduce the injection timing advance when the pressure in the rail is higher than the pressure demand.
- A fifth correction is made according to the rate of EGR.

  This correction is used to correct the injection timing advance as a function of the rate of exhaust gas recirculation. When the EGR rate increases, the injection timing advance must in fact be increased in order to compensate for the fall in termperature in the cylinder.

During starting, the injection timing must be retarded in order to position the start of combustion close to the TDC. To do this, special mapping is used to determine the injection timing advance as a function of the engine speed and of the water temperature. This requirement only concerns the starting phase, since once the engine has started the system must re-use the mapping and the corrections described previously.

Pilot injection timing control

The pilot injection timing is determined as a function of the engine speed and of the total flow.

The elements are;

- A first correction is made according to the air and coolant temperatures.

  This correction allows the pilot injection timing to be adapted to the operating temperature of the engine.
- A second correction is made according to the atmospheric pressure.

  This correction is used to adapt the pilot injection timing as a function of the atmospheric pressure and therefore the altitude.

During the starting phase, the pilot injection timing is determined as a function of the engine speed and of the coolant temperature.

امداد خودرو ایران
تلفن شبانه روزی: ۰۲۱-۸۸۳۶۰۸۵
FarmaSOS.com

FUEL FLOW CONTROL

Main Flow Control

The main flow represents the amount of fuel injected into the cylinder during the main injection. The pilot flow represents the amount of fuel injected during the pilot injection.

The total fuel injected during 1 cycle (main flow + pilot flow) is determined in the following manner.

: The driver's demand is compared with the value of the minimum flow determined by the idle speed controller.

- When the driver depress the pedal, it is his demand which is taken into account by the system in order to determine the fuel injected.
- When the driver release the pedal, the idle speed controller takes over to determine the minimum fuel which must be injected into the cylinder to prevent the enigne from stalling.

It is therefore the greater of these 2 values which is retained by the system. This value is then compared with the lower flow limit determined by the ASR trajectory control system. As soon as the injected fuel becomes lower than the flow limit determined by the ASR trajectory control system, the antagonistic torque (engine brake) transmitted to the drive wheels exceeds the adherence capacity of the vehicle and there is therefore a risk of the drive wheels locking. The system thus chooses the greater of these 2 values (main flow & pilot flow) in order to prevent any loss of control of the vehicle during a sharp deceleration.

This value is then compared with the flow limit determined by the cruise control. As soon as the injected fuel becomes lower than the flow limit determined by the cruise control, the vehicle's speed falls below the value required by the driver. The system therefore chooses the greater of these 2 values in order to maintain the speed at the required level.

This valve is then compared with the flow limit determined by the flow limitation strategy. This strategy allows the flow to be limited as a function of the operating conditions of the engine. The system therefore chooses the smaller of these 2 values in order to protect the engine. This value is then compared with the fuel limit determined by the ASR trajectory control system.

As soon as the injected fuel becomes higher than the fuel limit determined by the ASR trajectory control system, the engine torque transmitted to the wheels exceeds the adhesion capacity of the vehicle and there is a risk of the drive wheels skidding. The system therefore chooses the smaller of the two values in order to avoid any loss of control of the vehicle during accelerations.

FarmaSOS.com

The anti-oscillation strategy makes it possible to compensate for fluctuations in engine speed during transient conditions. This strategy leads to a fuel correction which is added to the total fuel of each cylinder. The correction is determined before each injection as a function of the instantaneous engine speed.

A switch makes it possible to change over from the supercharge fuel to the total fuel according to the state of the engine.

- Until the stating phase has finished, the system uses the supercharged fuel.
- Once the engine changes to normal operation, the system uses the total fuel.

The main fuel is obtained by subtracting the pilot injection fuel from the total fuel.

A mapping determines the minimum fuel which can control an injector as a function of the rail pressure. As soon as the main fuel falls below this value, the fuel demand changes to 0 because in any case the injector is not capable of injecting the quantity demand.

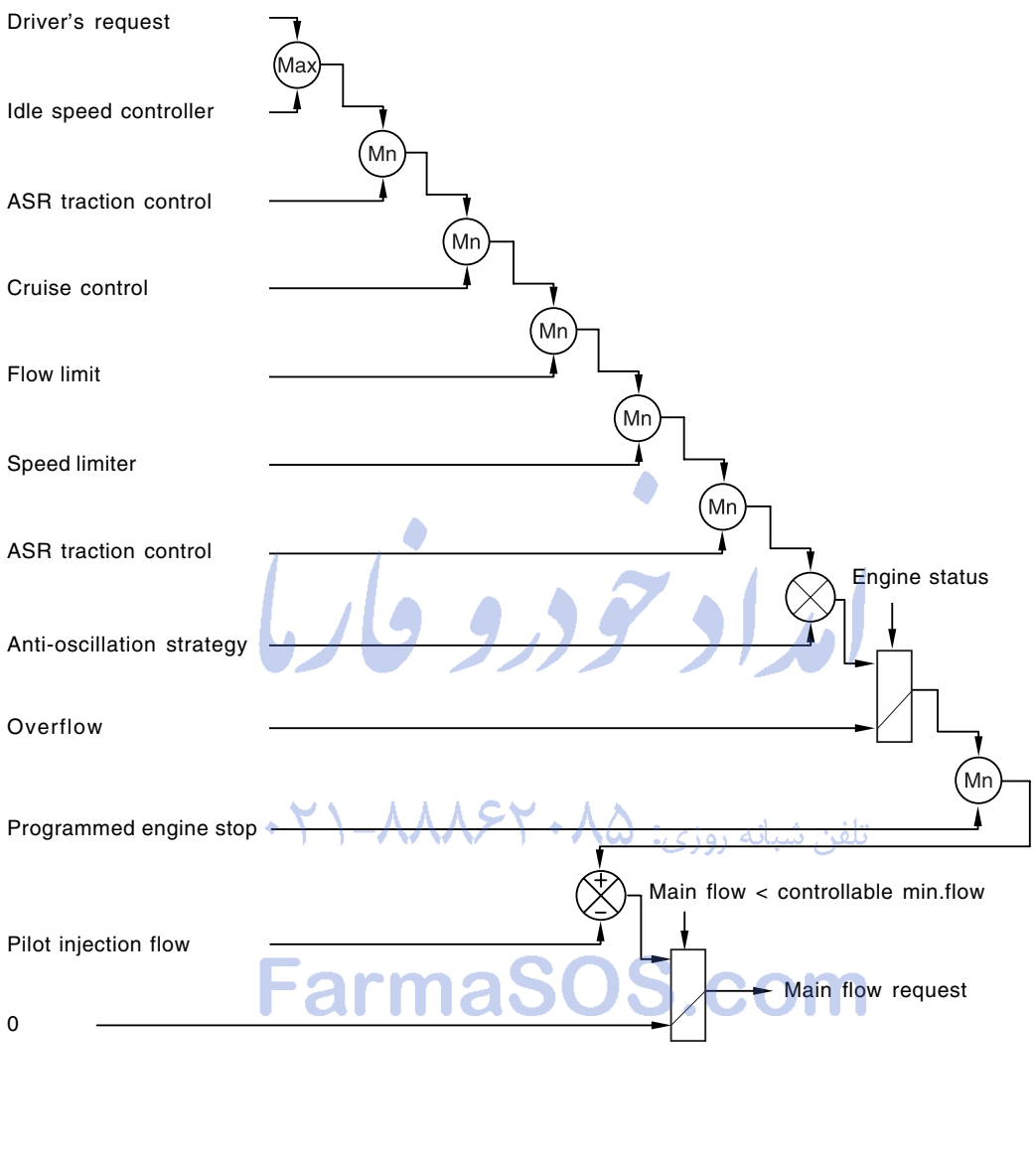

امداد خودرو فارما
تلفن شبانه روزی: ۰۲۱-۸۸۸۶۲۰۸۵
FarmaSOS.com

Driver Demand

The driver demand is the translation of the pedal position into the fuel demand. It is calculated as a function of the pedal position and of the engine speed. The driver demand is filtered in order to limit the hesitations caused by rapid changes of the pedal position. A mapping determines the maximum fuel which can be injected as a function of the driver demand and the rail pressure. Since the flow is proportional to the injection time and to the square root of the injection pressure, it is necessary to limit the flow according to the pressure in order to avoid extending the injection for too long into the engine cycle. The system compares the driver demand with this limit and chooses the smaller of the 2 values. The driver demand is then corrected according to the coolant temperature. This correction is added to the driver demand.

Idle Speed Controller

The idle speed controller consists of 2 principal modules:

- The first module determines the required idle speed according to:
  - The operating conditions of the engine (coolant temperature, gear engaged)
  - Any activation of the electrical consumers (power steering, air conditioning, others)
  - The battery voltage
  - The presence of any faults liable to interface with the rail pressure control or the injection control. In this case, the accelerated idle speed is activated to prevent the engine from stalling when operating in degraded mode.
  - It is possible to increase or to reduce the required idle speed with the aid of the diagnostic tool.
- The second module is responsible for providing closed loop control of the engine's idle speed by adapting the minimum fuel according to the difference between the required idle speed and the engine speed.

Flow Limitation

The flow limitation strategy is based on the following strategies:

- The flow limitation depending on the filling of the engine with air is determined according to the engine speed and the air flow. This limitation allows smoke emissions to be reduced during stabilized running.
- The flow limitation depending on the atmospheric pressure is determined according to the engine speed and the atmospheric pressure. It allows smoke emissions to be reduced when driving at altitude.
- The full load flow curve is determined according to the gear engaged and the engine speed. It allows the maximum torque delivered by the engine to be limited.
- A performance limitation is introduced if faults liable to upset the rail pressure control or the injection control are detected by the system. In this case, and depending on the gravity of the fault, the system activates:
  - Reduced fuel logic 1: Guarantees 75 % of the performance without limiting the engine speed.
  - Reduced fuel logic 2: Guarantees 50 % of the performance with the engine speed limited to 3,000 rpm.
  - Reduce fuel logic 3: Limits the engine speed to 2,000 rpm.

The system chooses the lowest of all these values.

A correction depending on the coolant temperature is added to the flow limitation. This correction makes it possible to reduce the mechanical stresses while the engine is warming up. The correction is determined according to the coolant temperature, the engine speed and the time which has passed since starting.

Superchager Flow Demand

The supercharge flow is calculated according to the engine speed and the coolant temperature. A correction depending on the air temperature and the atmospheric pressure is made in order to increase the supercharge flow during cold starts. It is possible to alter the supercharge flow value by adding a flow offset with the aid of the diagnostic tool.

Pilot flow control

The pilot flow represents the amount of fuel injected into the cylinder during the pilot injection. This amount is determined according to the engine speed and the total flow.

- A first correction is made according to the air and water temperature.

  This correction allows the pilot flow to be adapted to the operating temperature of the engine. When the engine is warm, the ignition time decreases because the end-of-compression temperature is higher. The pilot flow can therefore be reduced because there is obviously less combustion noise when the engine is warm.
- A second correction is made according to the atmospheric pressure.

This correction is used to adapt the pilot flow according to the atmospheric pressure and therefore the altitude.

During starting, the pilot flow is determined on the basis of the engine speed and the coolant temperature.

Cylinder Balancing Strategy

Balancing of the point to point flows

The pulse of each injector is corrected according to the difference in instantaneous speed measured between 2 successive injectors.

- The instantaneous speeds on two successive injections are first calculated.
- The difference between these two instantaneous speeds is then calculated.
- Finally, the time to be added to the main injection pulse for the different injectors is determined. For each injector, this time is calculated according to the initial offset of the injector and the instantaneous speed difference.

Detection of an injector which has stuck closed

The cylinder balancing strategy also allows the detection of an injector which has stuck closed. The difference in instantaneous speed between 2 successive injections then exceeds a predefined threshold. In this case, a fault is signaled by the system.

Accelerometer Strategy

Resetting the pilot injection

The accelerometer is used to reset the pilot injection flow in closed loop for each injector. This method allows the correction of any injector deviations over a period of time. The principle of use of the accelerometer is based on the detection of the combustion noises.

The sensor is positioned in such a way as to receive the maximum signal for all the cylinders. The raw signals from the accelerometer are processed to obtain a variable which quantifies the intensity of the combustion. This variable, known as the ratio, consists of the ratio between the intensity of the background noise and the combustion noise.

- A first window is used to establish the background noise level of the accelerometer signal for each cylinder. This window must therefore be positioned at a moment when there cannot be any combustion.
- The second window is used to measure the intensity of the pilot combustion. Its position is such that only the combustion noises produced by the pilot injection are measured . It is therefore placed just before the main injection.

The accelerometer does not allow any evaluation of the quantity injected. However, the pulse value will be measured when the injector starts injection and this pulse value is called the MDP (Minimum Drive Pulse). On the basis of this information, it is possible to efficiently correct the pilot flows. The pilot injection resetting principle therefore consists of determining the MDP, in other words the pulse corresponding to the start of the increase in value of the ratio (increase of vibration due to fuel combustion).

FarmaSOS.com

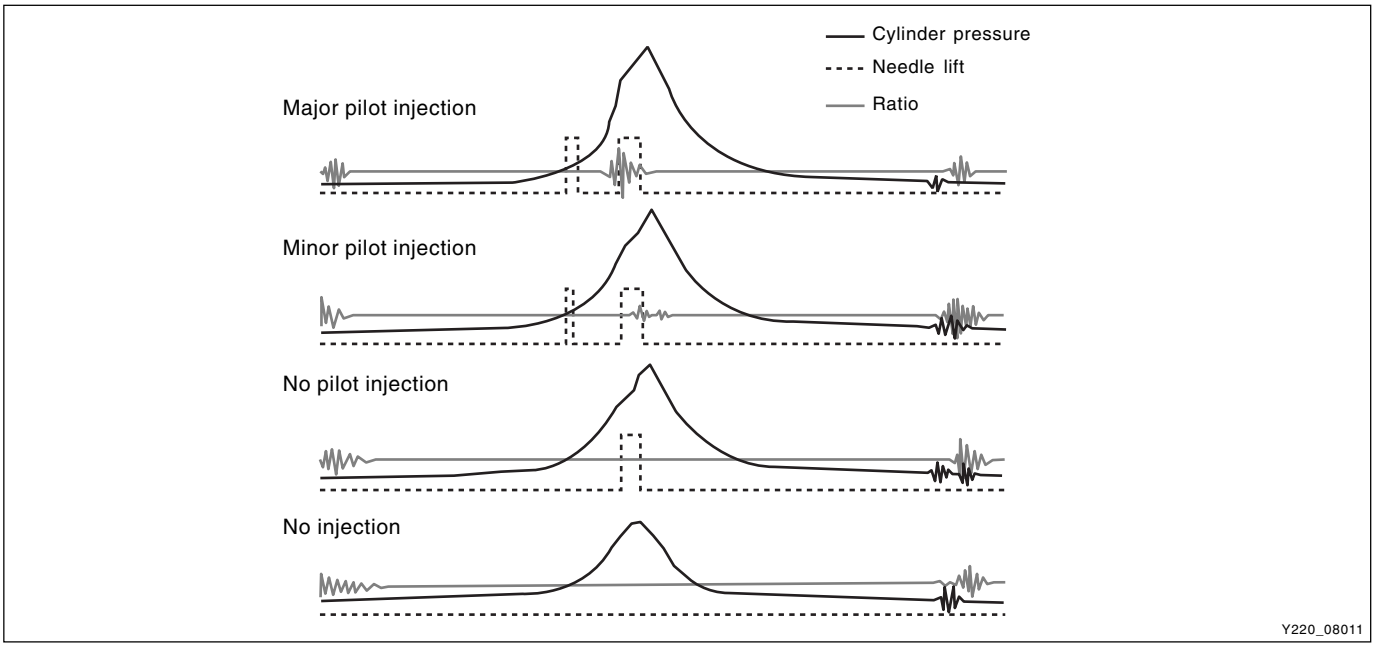

CHANGED BY	
EFFECTIVE DATE	
AFFECTED VIN	

This is done periodically under certain operating conditions. When the resetting is finished, the new minimum pulse value replaces the value obtained during the previous resetting. The first MDP value is provided by the C2I. Each resetting then allows the closed loop of the MDP to be updated according to the deviation of the injector.

Detection of leaks in the cylinders

The accelerometer is also used to detect any injector which may have stuck open. The detection principle is based on monitoring the ratio. If there is a leak in the cylinder, the accumulated fuel self-ignites as soon as the temperature and pressure conditions are favorable (high engine speed, high load and small leak).

This combustion is set off at about 20 degrees before TDC and before main injection.

The ratio therefore increases considerably in the detection window. It is this increase which allows the leaks to be detected. The threshold beyond which a fault is signaled is a percentage of the maximum possible value of the ratio. Because of the severity of the recovery process (engine shut-down), the etection must be extremely robust.

An increase in the ratio can be the consequence of various causes:

- Pilot injection too strong
- Main combustion offset
- Fuel leak in the cylinder

If the ratio becomes too high, the strategy initially restricts the pilot injection flow and retards the main injection. If the ratio remains high despite these interventions, this shows that a real leak is present, a fault is signaled and the engine is shut down.

Detection of an accelerometer fault

This strategy permits the detection of a fault in the sensor or in the wiring loom connecting the sensor to the ECU. It is based on detection of the combustion. When the engine is idling, the detection window is set too low for the combustion caused by the main injection. If the ratio increases, this shows that the accelerometer is working properly, but otherwise a fault is signaled to indicate a sensor failure. The recovery modes associated with this fault consist of inhibition of the pilot injection and discharge through the injectors.

ایران خودرو فارما
تلفن شبانه روزی: ۰۲۱-۸۸۸۶۲۰۸۵
FarmaSOS.com

INDIVIDUAL INJECTOR CALIBRATION (C2I)

Injected fuel is proportional to square root of injection time and rail pressure.

It is function between pulse and rail pressure and fuel injection curve is called injector characteristics curve having the following shape.

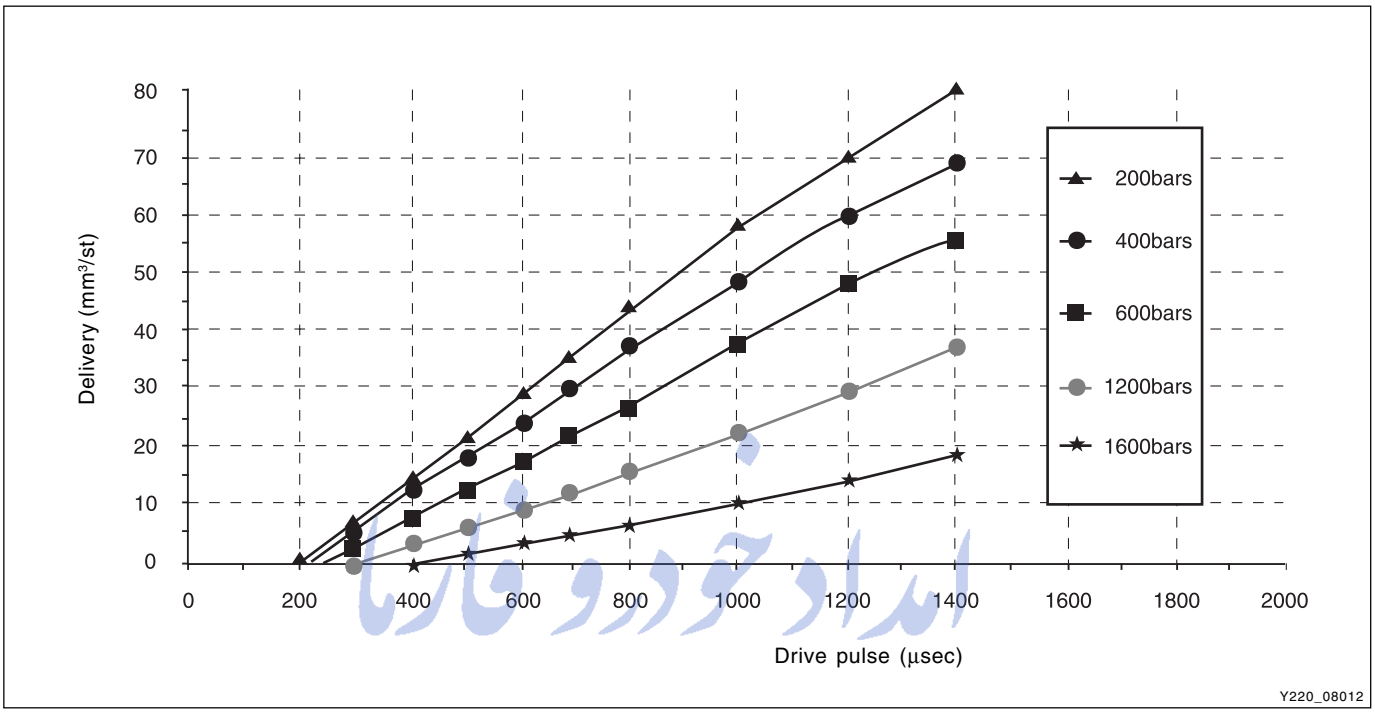

Common rail injectors are very accurate components. They are able to inject fuel delivery between 0.5 to 100 mg/str under pressure varying from 150 to 1600 bar.

This high level of accuracy requires very low machining tolerances (few µm).

Nevertheless, due to the machining dispersion, the loss of charge through the functional orifices, the friction between moving parts and electromagnetic field level are different from one injector to the other. So, the difference of fuel delivery for the same pressure and the same pulse can reach 5 mg/str from one injector to the other. It is impossible to control efficiently the engine with such a dispersion between the different injectors. It is necessary to add a correction that allows injecting the demanded fuel delivery whatever the initial hydraulic characteristics of the injector is. The method consists in correcting the pulse that is applied to the injector with an offset that depends on the initial hydraulic map of the injector. So, the pulse should be corrected according to characteristics of each injector.

امداد خودرو فارما
تلفن شبانه روزی ۰۲۱-۸۸۸۶۰۰۸۵
FarmaSOS.com

CHANGED BY	
EFFECTIVE DATE	
AFFECTED VIN	

C2I is composed of models on these characteristics of injectors.

C2I consists of 16-digit; composed of numbers from 1 to 9 and alphabets from A to F. ECU remembers C2I, characteristics of each injector, to make the most optimal fuel injection.

- When replacing the injector, C2I code on the top of new injector should be input into ECU because the ECU is remembering the injector's C2I value. If C2I is not input, engine power drops and occurs irregular combustion.
- When ECU is replaced, C2I code of every injector should be input. If not, cannot accelerate the vehicle even when the accelerator pedal is depressed.

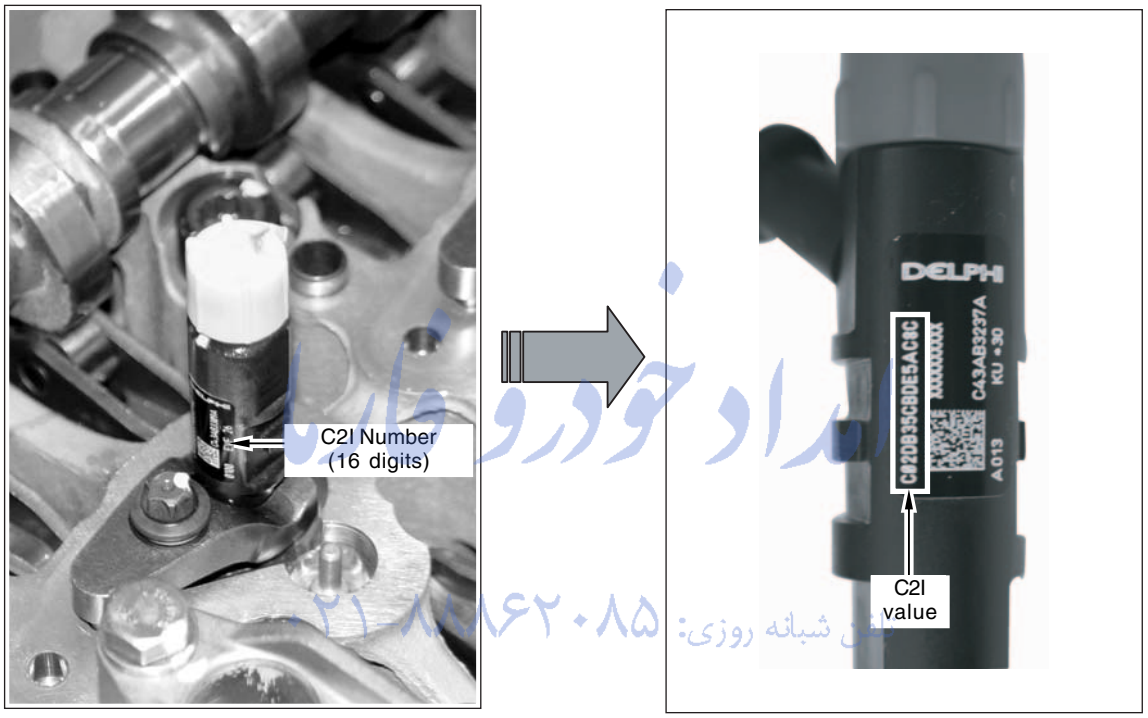

FarmaSOS.com

※ For coding of C2I, refer to "Diagnosis" section

MINIMUM DRIVE PULSE (MDP) LEARNING

When the pulse value that the injector starts injection is measured, it is called mininum drive pulse (MDP). Through MDP controls, can correct pilot injections effectively. Pilot injection volume is very small, 1 ~ 2 mm/str, so precise control of the injector can be difficult if it gets old. So there needs MDP learning to control the very small volume precisely through learning according to getting older injectors.

▶ Learning Conditions

Coolant temperature	> 75°C
Vehicle speed	> 50 Km/h (over 5 seconds)
Intake manifold pressure	> 0.7 bar
Engine speed	> 2,500 rpm
Battery voltage	10 V < MDP < 16 V
Fuel temperature	0 < fuel temperature < 80 °C
Initial MDP learning on each injector	5 seconds

▶ Trouble Codes

Trouble code	Description	Diagnosis
P1171	Fault MDP learning on injector No. 1	• Check each injector
P1172	Fault MDP learning on injector No. 2	
P1173	Fault MDP learning on injector No. 3	
P1174	Fault MDP learning on injector No. 4	
P1175	Fault MDP learning on injector No. 5	

امداد خودرو فارما
تلفن شبانه روزی: ۰۲۱-۸۸۸۶۳۰۸۵
FarmaSOS.com

▶ Accelerator Pedal Sensor



<Location of accelerator pedal sensor>



<When depressing the accelerator pedal and brake pedal simultaneously>

Y220_08014

Accelerator pedal sensor changes accelerator pedal position into electrical signal and then sends to ECU to let know the driver's demand. There are 2 sensors in the accelerator pedal sensor. Accelerator pedal No.1 (ACC 1) sensor signal determines fuel injection volume and injection timing during driving, and accelerator pedal No. 2 (ACC 2) sensor signal compares whether the No. 1 sensor signal value is correct.

If accelerator pedal No. 1 and 2 sensors are defective, ECU remembers defect code, and acceleration responses are getting bad and engine rpm hardly increases.

Notice

When depressing the accelerator pedal and brake pedal simultaneously while driving, the acceleration response will be diminished abruptly and cannot drive with over 70 km/h even though depressing the accelerator pedal to its end. At this time, the trouble code of "P-1124 Accelerator pedal sensor stuck" is stored into ECU. If depressing the accelerator pedal over 3 times, it will be resumed to normal condition.

**** For detailed information, refer to "Diagnosis" section in this manual.***

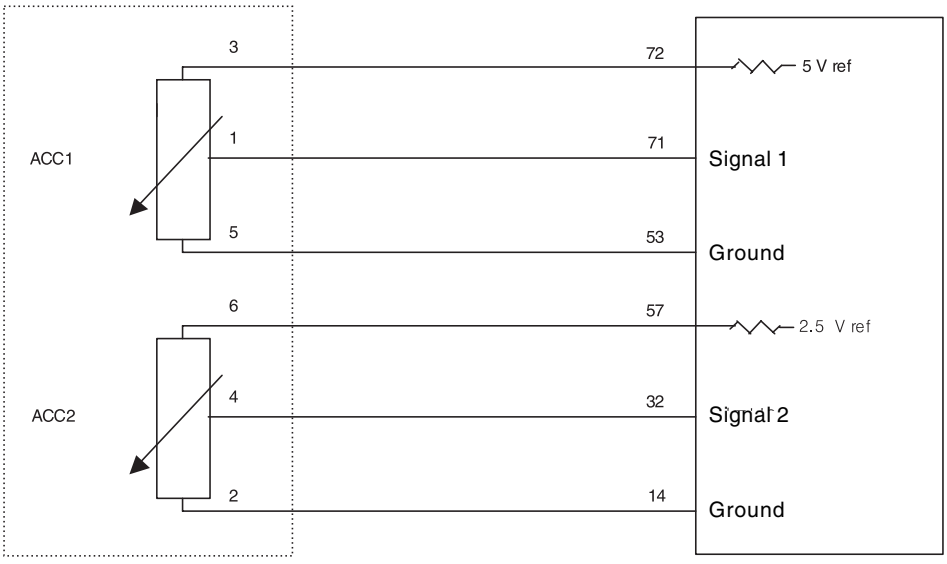

<Circuit diagram of Accelerator pedal sensor>

Y220_08015

▶ Coolant Temperature Sensor



<Coolant temperature sensor>

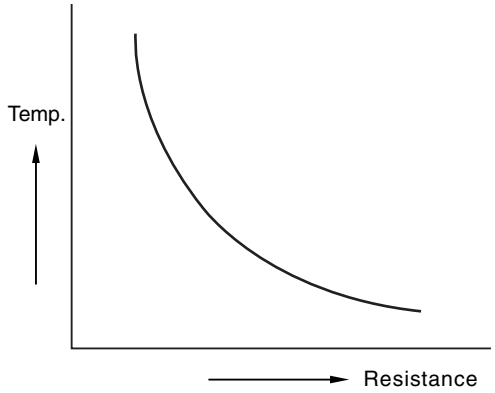

<Output characteristics of coolant temperature sensor>

Y220_08016

Coolant temperature sensor is a NTC resister that sends coolant temperature to ECU.

NTC resister has characteristics that if the engine temperature rises, the resistance lowers so the ECU detects lowering signal voltages.

If the fuel injected into the engine through injector has more turbulence, then combusts very well. However, if engine temperature is too low, the fuel injected as foggy state forms big compounds causing incomplete combustion. So the sensor detects coolant temperature and changes coolant temperature changes into voltage then sends to ECU to increase the fuel volume during cold start for better starting. And detects engine overheating for fuel volume reduction to protect the engine.

ECU functions as below with coolant temperature sensor signals.

- When engine is cold, controls fuel volume to correct idle speed.
- When engine is overheated, controls electrical fan and A/C compressor to protect the engine.
- Sends information for emission control.

Temperature (°C)	NTC 1 Resistance (Ω)	NTC 1 Resistance (Ω)
20	2,550	6,062
50	826	1,800
80	321	638
120	123	200

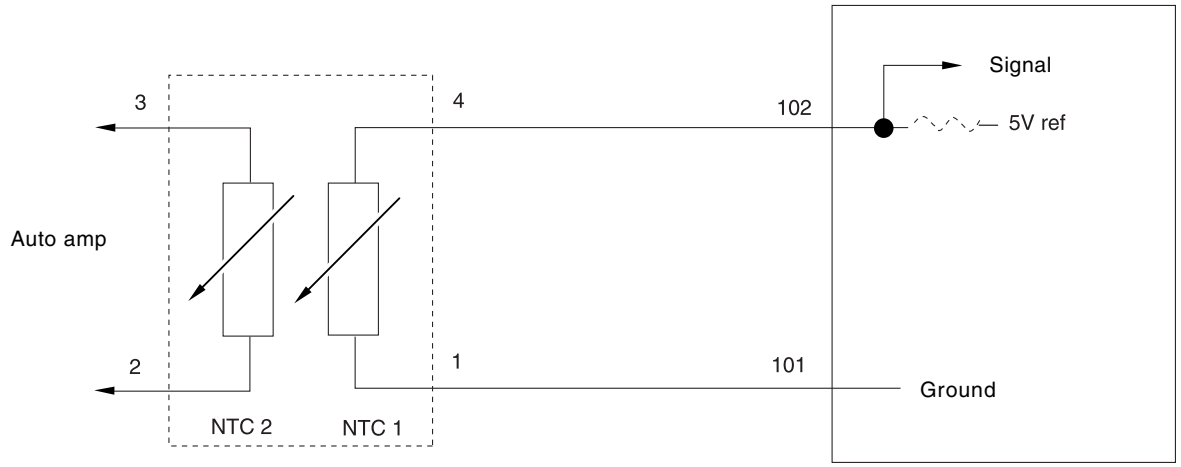

<Circuit diagram of coolant temperature sensor>

Y220_08017

CHANGED BY	
EFFECTIVE DATE	
AFFECTED VIN	

▶ Boost Pressure Sensor

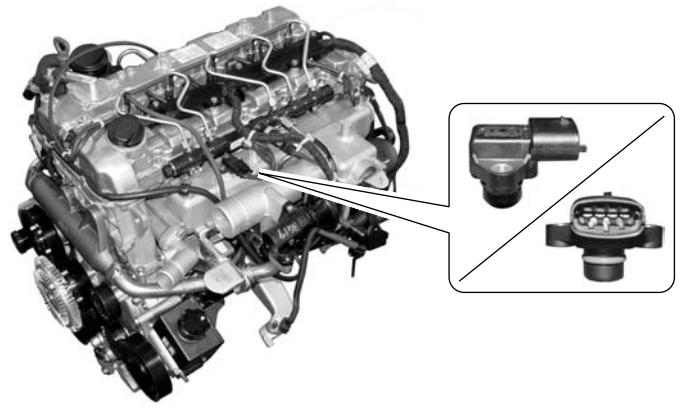

<Location of boost pressure sensor>

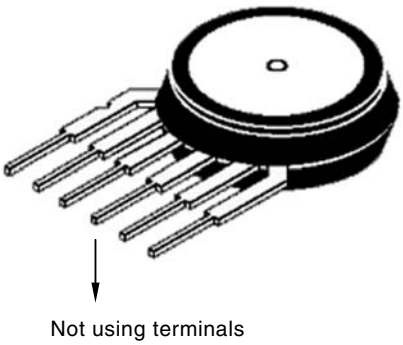

<Boost pressure sensor>

Y220_08018

Boost pressure sensor uses piezo element and uses only 3 terminals out of 6.

It sets fuel injection timing and corrects fuel injection volume according to atmospheric pressure.

The other function is determining EGR operation stops.

- Output voltage calculation
  $V_O = V_S \times (P \times 0.004 - 0.04)$
  V_O : Output voltage
  V_S : Supply voltage
  P : Applying voltage

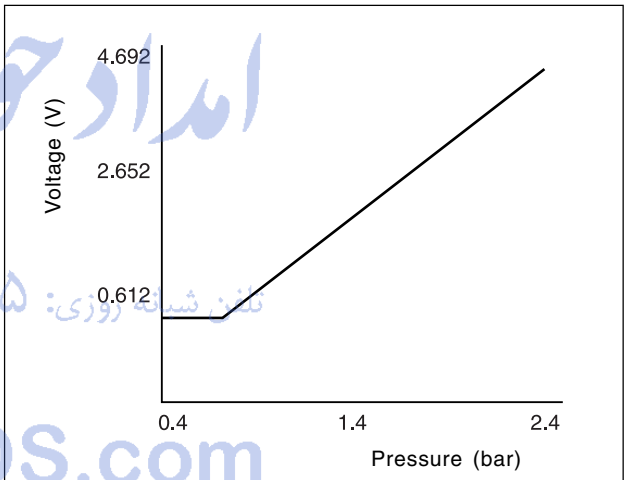

<Output characteristics of sensor>

Y220_08019

امداد خودرو فارما
تلفن شبانه روزی: ۰۲۱-۸۸۸۶۲۰۸۵
FarmaSOS.com

Performance proofing pressure range	20 ~ 250 KPa
Performance proofing temperature range	- 40 ~ 110°C
Storage proofing temperature range	- 40 ~ 125°C
Performance proofing supply voltage	4.85 ~ 5.35 V
Max. consuming current	10 mA (supply voltage at 5.35 V)
Responsibility	$T_R \leq$ 7ms
Tightening torque	10 Nm

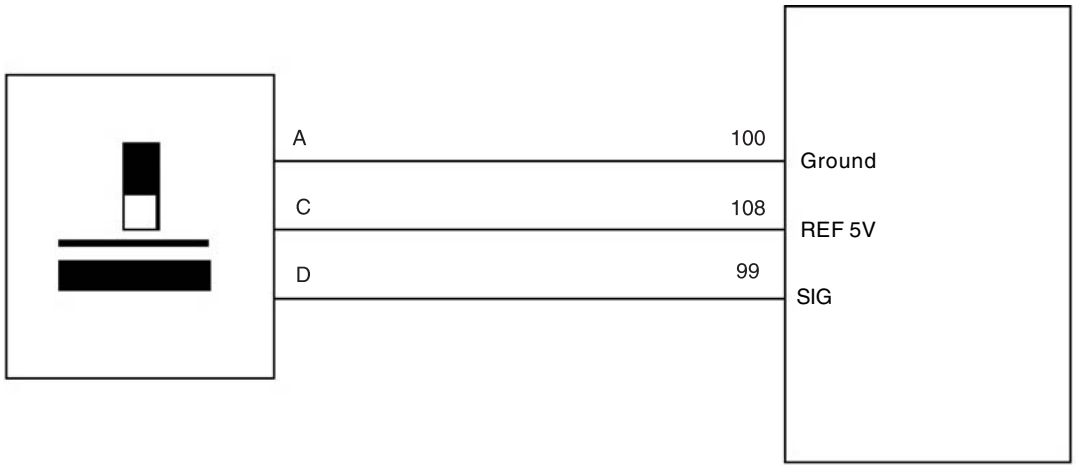

<Circuit diagram of booster pressure sensor>

Y220_08020

▶ Vehicle Speed Sensor

The ABS or ESP control unit sends the vehicle speed signals to ECU. ECU uses these signals to calculate the vehicle speed and meter cluster shows signals as vehicle speed.

Function

- Limits idle control correction duty range
- Controls cooling fan
- Cuts fuel injection if exceeds max. speed
- Controls vehicle shifting feeling
- Used for exhaust gas control mode

امداد خودرو فارما
تلفن شبانه روزی: ۰۲۱-۸۸۸۶۲۰۸۵
FarmaSOS.com

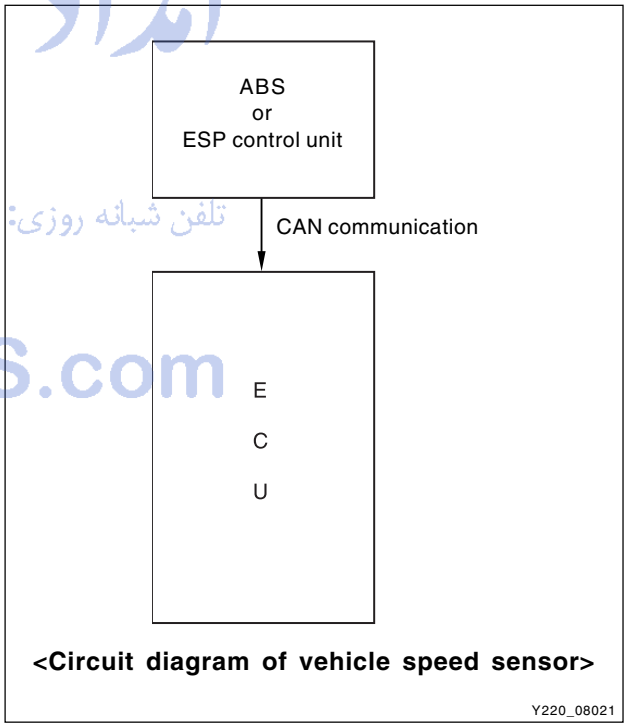

<Circuit diagram of vehicle speed sensor>

Y220_08021

CHANGED BY	
EFFECTIVE DATE	
AFFECTED VIN	

▶ Barometric Pressure Sensor

It is built-in the ECU and detects absolute pressure of atmosphere to correct fuel injection timing and injection volume according to altitude.

▶ Other switches

Brake switch

Brake switch detects brake pedal operations and then sends to engine ECU. It has dual structure with 2 combined switches and there are brake switch 1 and 2. When these 2 signals are input, engine ECU recognizes as normal brake signals. These switch signals are related with accelerator pedal sensor operations and used to control the fuel volume during braking. It means there are no problems in operating accelerator pedal when the brake pedal is operated but the fuel volume reduces if operates brake pedal while the accelerator pedal is depressed.

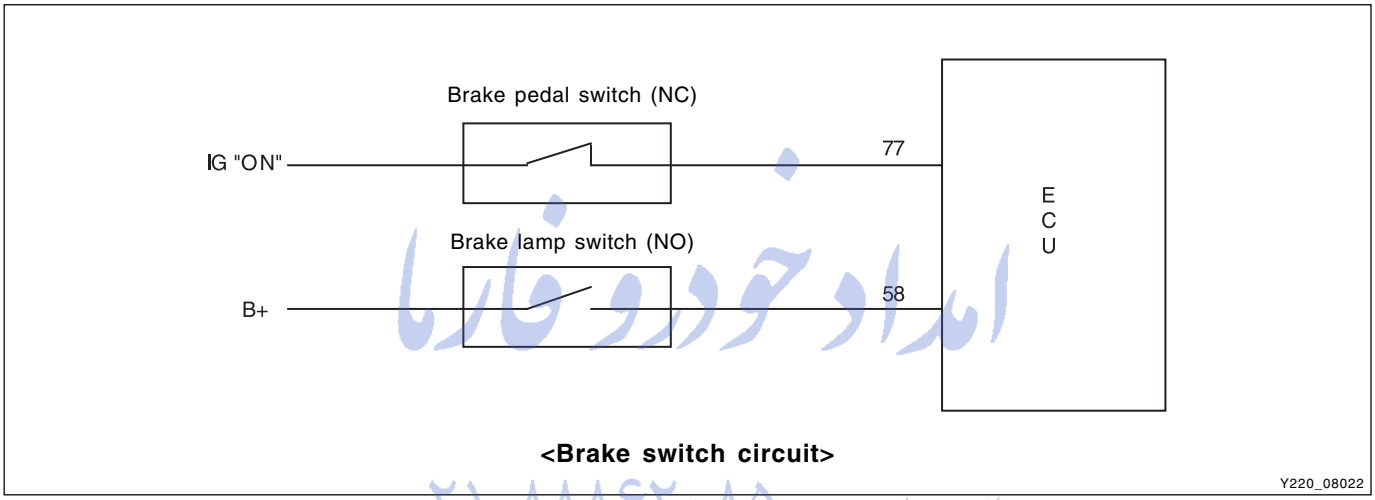

<Brake switch circuit>

Y220_08022

امداد خودرو فارما
تلفن شبانه روزی: ۰۲۱-۸۸۸۶۲۰۸۵

Clutch pedal switch

Clutch pedal switch is installed on the upper of the clutch and sends clutch pedal operations to engine ECU. Contact type switch allows engine ECU to recognize the shifting points to correct the fuel volume. It means it corrects fluctuation happens during gear shifting. Another different function is canceling auto cruise function if equipped (auto cruise control - equipped for export).

Farma808.com

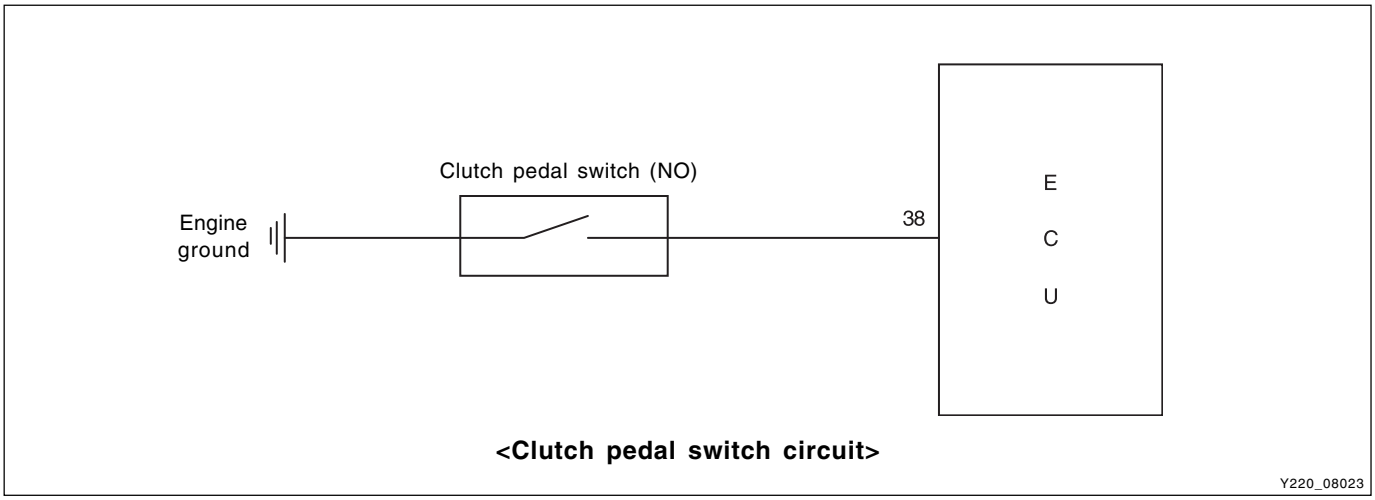

<Clutch pedal switch circuit>

Y220_08023

SECTION DI09

ELECTRIC DEVICES AND SENSORS

امداد خودرو فارما

تلفن شبانه روزی: ۰۲۱-۸۸۸۶۲۰۸۵

FarmaSOS.com

SECTION DI09

ELECTRIC DEVICES AND SENSORS

Table of Contents

ELECTRIC DEVICES AND SENSORS DI09-3
Sensors in engine compartment DI09-3
Electric devices in engine compartment DI09-4
Specifications DI09-5
Circuit diagram of preheating system DI09-6
Circuit diagram of starting and alternator DI09-7
TROUBLE DIAGNOSIS DI09-8
General DI09-8
Alternator DI09-10
Starter DI09-12
Preheating system DI09-14
Preheating time relay DI09-16
Glow plug DI09-17
SPECIAL TOOLS AND EQUIPMENT DI09-19

امداد خودرو فارما
تلفن ثبت سفارش ۰۲۱-۸۸۸۶۲۰۸۵
FarmaSOS.com

CHANGED BY	
EFFECTIVE DATE	
AFFECTED VIN	

امداد خودرو فارما

تلفن شبانه روزی: ۸۸۸۶۲۰۸۵-۰۲۱

FarmaSOS.com

ELECTRIC DEVICES AND SENSORS

SENSORS IN ENGINE COMPARTMENT



امداد خودرو فارما
تلفن شبانه روزی ۰۲۱-۸۸۰۰۲۲۰۰
Farmacars.com

CHANGED BY	
EFFECTIVE DATE	
AFFECTED VIN	

ELECTRIC DEVICES IN ENGINE COMPARTMENT

Alternator



* Capacity
  PTC equipped vehicle
  : 12V - 140A
  FFH equipped vehicle
  : 12V - 115A

Glow plug

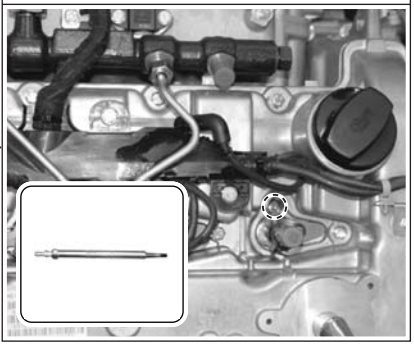

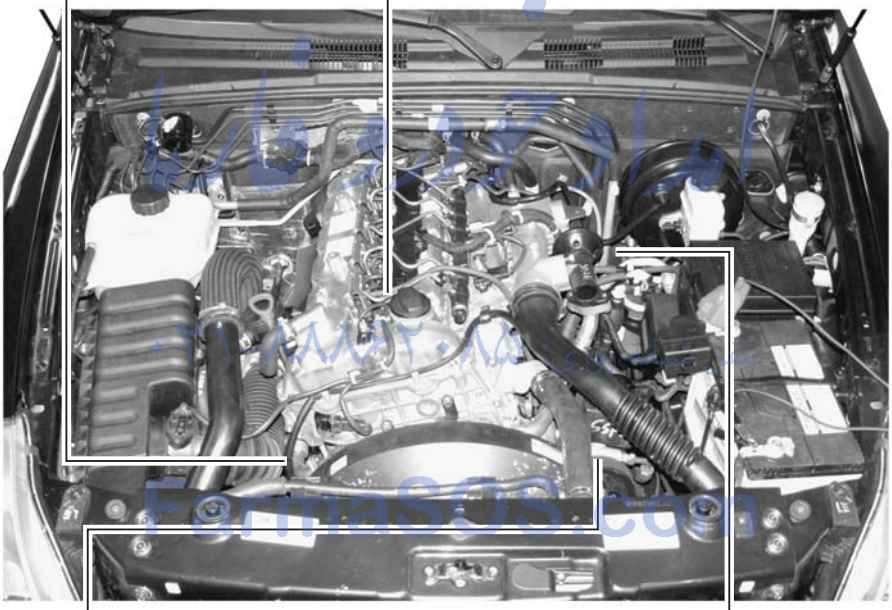

Air conditioner compressor



Starter



Y220_09002

CHANGED BY	
EFFECTIVE DATE	
AFFECTED VIN	

SPECIFICATIONS

Description			Unit	Specification
Starter	Type		-	WP220
	Output power		Kw	2.2
	No load test @ 12 volts		A	160
	Drive pinion speed at no load		rpm	4500
	Drive pinion speed at load		rpm/A	1700/430
	Brush length		mm	18
	Armature diameter		mm	55
	Armature run-out		mm	0.1
	Segment groove depth		mm	21.7
Alternator	Type		-	CS128D
	Output voltage / current		V/A	PTC equipped vehicle: 12V-140A FFH equipped vehicle: 12V-115A
	Regulator type		-	←
	Regulating voltage		V	14.6
	Brush	Length	mm	12.5
		Quantity	-	2
		Wear limit	mm	7
Battery	Type		-	M F
	Capacity		AH	12V - 90AH
	Rupture capatity		RC	160
Glow plug	Type		-	Seized type
	Rated voltage		-	11.5
	Circuit connection		-	Parallel
	Preheating time		sec	Max. 60 ~ 90

امداد خودرو فارما
تلفن شبانه روزی: ۰۲۱-۸۸۸۶۲۰۸۵
FarmaSOS.com

CHANGED BY	
EFFECTIVE DATE	
AFFECTED VIN	

CIRCUIT DIAGRAM OF PREHEATING SYSTEM

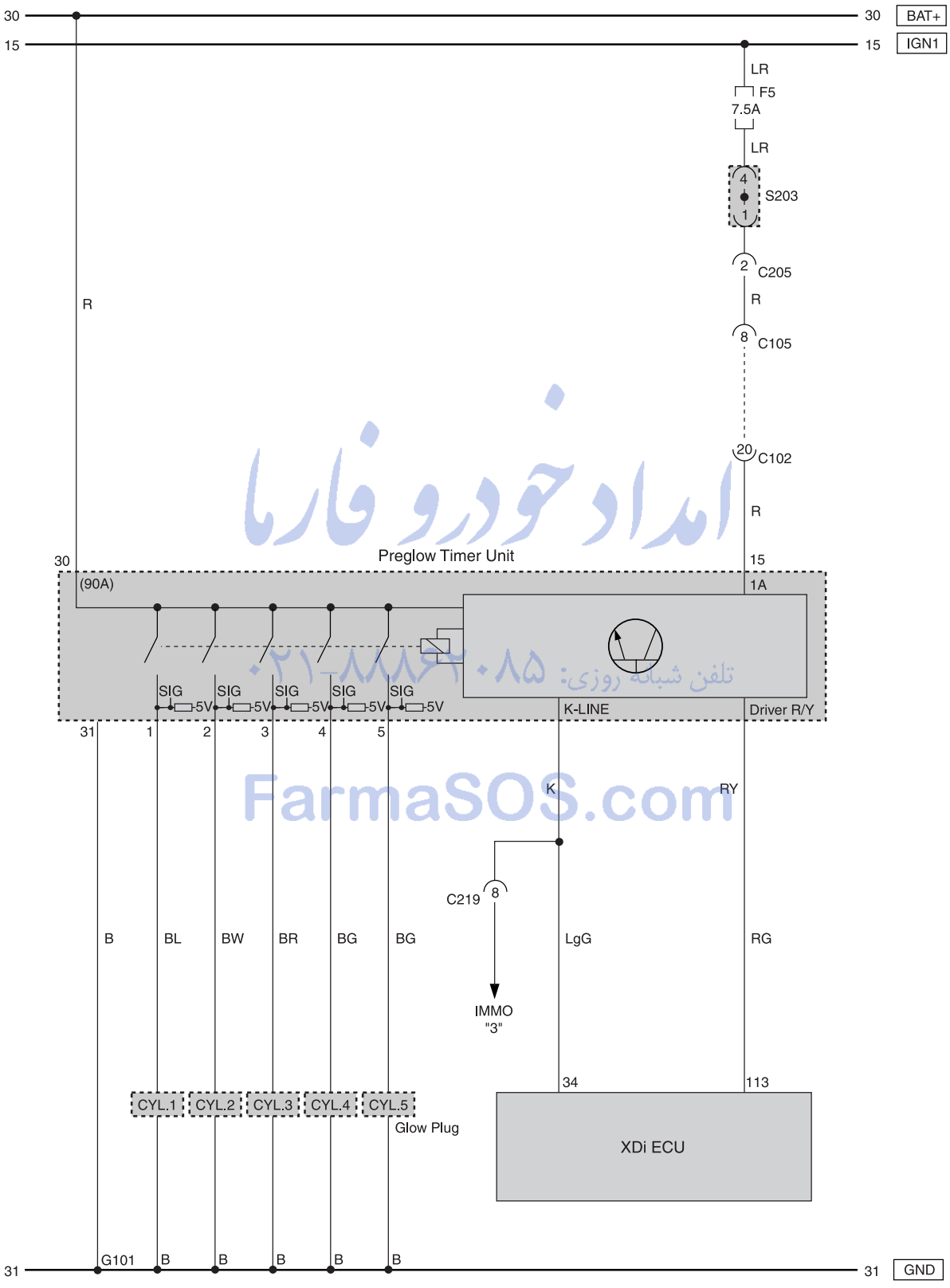

امداد خودرو فارما
تلفن شبانه روزی: ۰۸۵-۸۸۸۶۰۲۱
FarmaSOS.com

CIRCUIT DIAGRAM OF STARTING AND ALTERNATOR

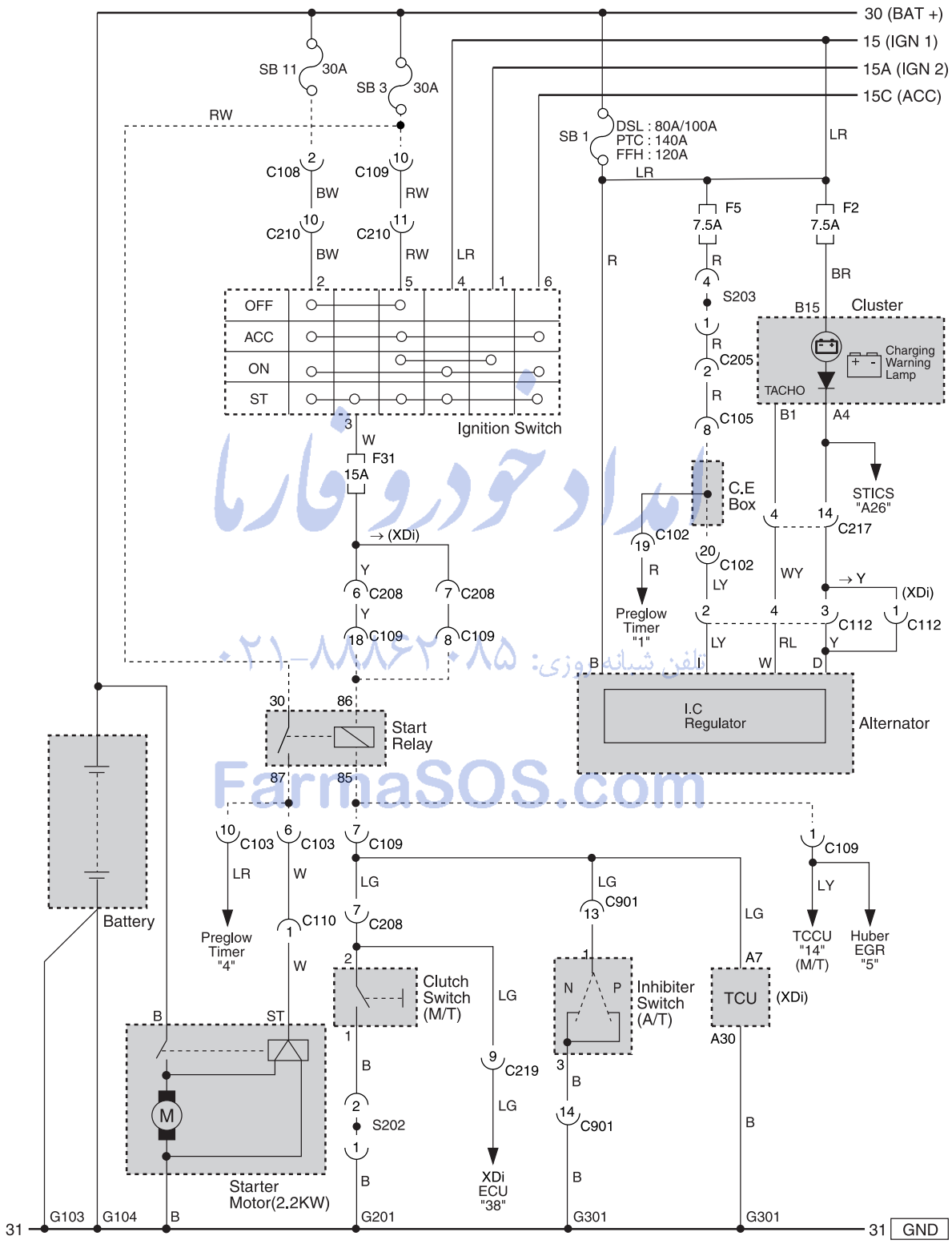

FarmaSOS.com

CHANGED BY	
EFFECTIVE DATE	
AFFECTED VIN	

TROUBLE DIAGNOSIS

GENERAL

Condition	Probable Cause	Correction
No crank	• Low battery voltage.	• Charging the battery or replace the battery.
	• Battery cable is loose, corroded, or damaged.	• Repair or replace the battery cable.
	• Faulty starter motor or starter motor circuit is open.	• Repair or replace the starter motor/starter motor circuit.
	• Faulty ignition switch.	• Replace the ignition switch.
	• Ground short.	• Repair the ground short.
Crank ok, but too slow	• Low battery voltage.	• Charging the battery or replace the battery.
	• Battery. • Battery cables are loose, corroded, or damaged.	• Repair or replace the battery cable.
	• Faulty starter motor.	• Repair or replace the starter motor.
Starter motor does not stop	• Faulty starter motor.	• Repair or replace the starter motor.
	• Faulty ignition switch.	• Replace the ignition switch.
Starter motor running, but not cranking	• Broken the clutch pinion gear or faulty starter motor.	• Replace the starter motor.
	• Broken the flywheel ring gear.	• Replace the flywheel.
	• Connected circuit is open.	• Repair the open circuit.
Battery discharge	• Loosen the generator drive belt.	• Adjust the belt tension or replace the belt.
	• The circuit is open or a short.	• Repair the open or a short circuit.
	• Battery run down.	• Replace the battery.
	• Open ground circuit.	• Repair the open ground circuit.
Charging indicator lamp does not work when the ignition switch on (engine does not work)	• Charging indicator lamp is blown or fuse is blown.	• Repair or replace the charging indicator lamp/fuse.
	• Faulty ignition switch.	• Replace the ignition switch.
	• Generator ground circuit is open or a short.	• Repair the circuit.
Charging indicator lamp does not put out lights after starting the engine	• Battery cable is corroded or damaged.	• Repair or replace the battery cable.
	• Loosen the generator drive belt.	• Adjust the belt tension or replace the belt.
	• Faulty wiring harness.	• Repair the wiring harness.
Battery over charging	• Generator voltage regulator faulty	• Replace generator
	• Voltage detecfing wiring faulty	• Repair wiring

ایداد خودرو فارما
تلفن شبانه روزی: ۰۲۱-۸۸۶۲۰۸۵
FarmaSOS.com

Symptom	Cause	Action
Hard engine starting	• Ignition coil faulty	• Replace ignition coil
	• Distributor (including optical sensor) faulty	• Replace distribator (or sensor)
	• Spark plug malfuntion	• Replace spark plug or adjust clearance
	• Ignition timing faulty (spark plug light is normal)	• Resetting valve timing
Unstable engine idling	• Spark plug malfunction	• Replace spark plug or adjust clearance
	• Ignition coil faulty	• Replace ignition coil
	• Ignition timing faulty	• Resetting valve timing
Enging acceralation malfunction	• Ignition timing faulty	• Resetting valve timing

امداد خودرو فارما
تلفن شبانه روزی: ۰۲۱-۸۸۸۶۲۰۸۵
FarmaSOS.com

ALTERNATOR

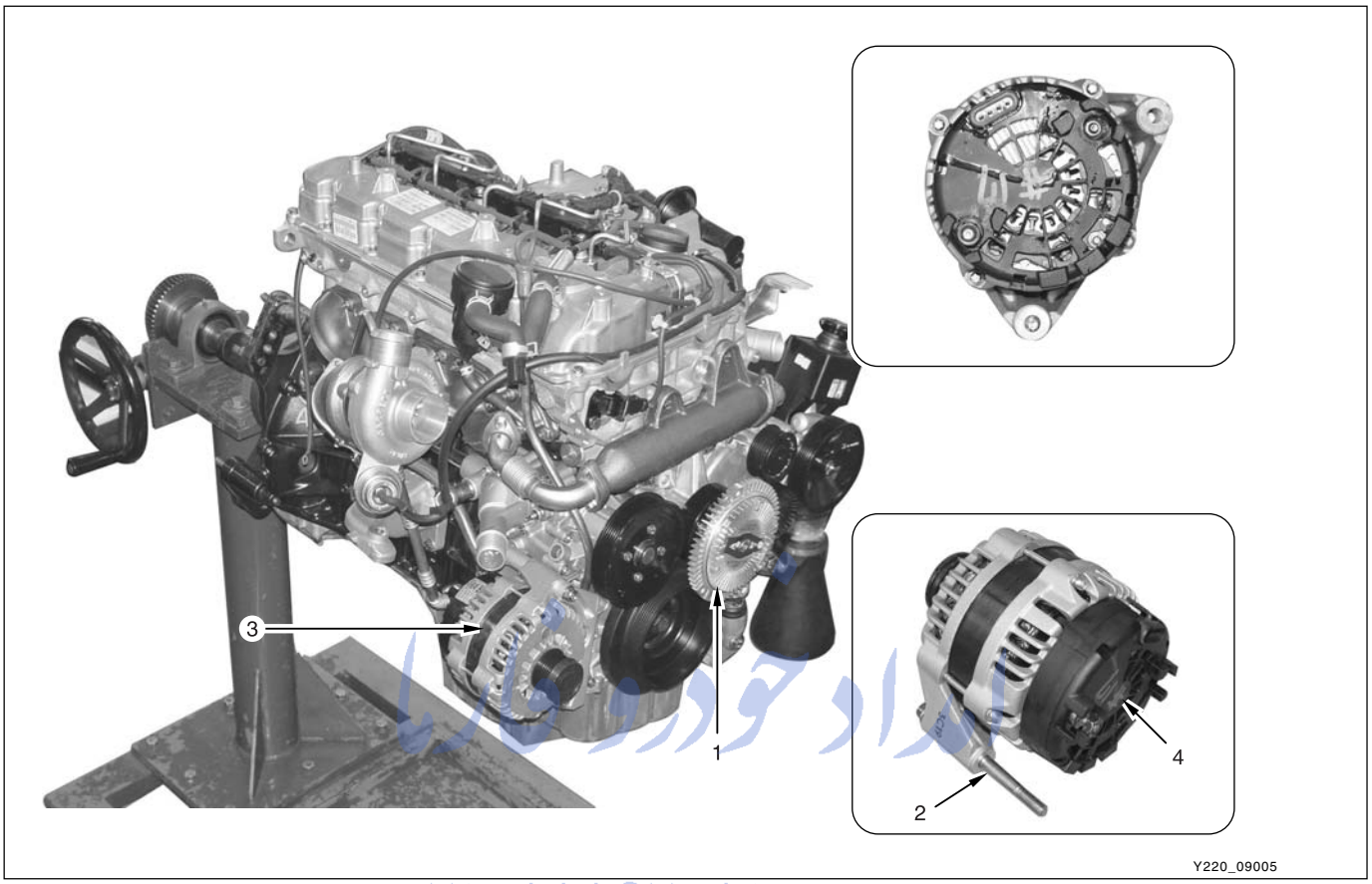

۰۲۱-۸۸۸۶۲۰۸۵ تلفن شبانه روزی
FarmaSOS.com

1. Cooling fan
2. Bolt ..... 45 Nm
3. Alternator
4. Plug connection

Removal and Installation

1. Disconnect the negative battery cable.
2. Remove the plug connection.

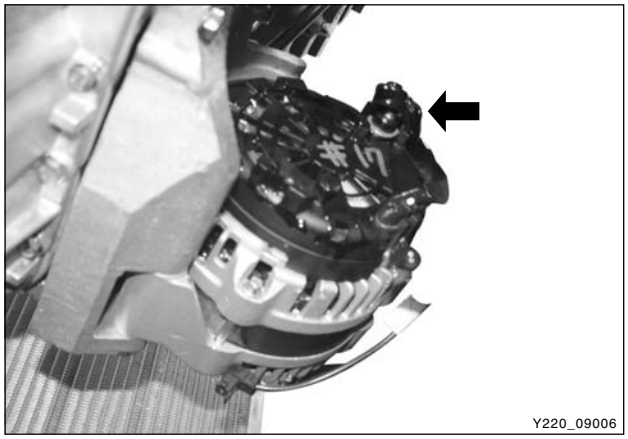

3. Unscrew the bolts and remove the alternator.

   Installation Notice

Tightening torque	45 Nm

4. Install in the reverse order of removal.

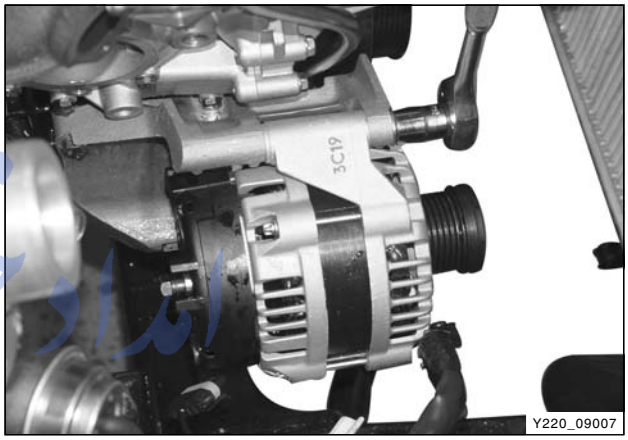

امداد خودرو فارما
تلفن شبانه روزی: ۰۲۱-۸۸۸۶۲۰۸۵
FarmaSOS.com

STARTER

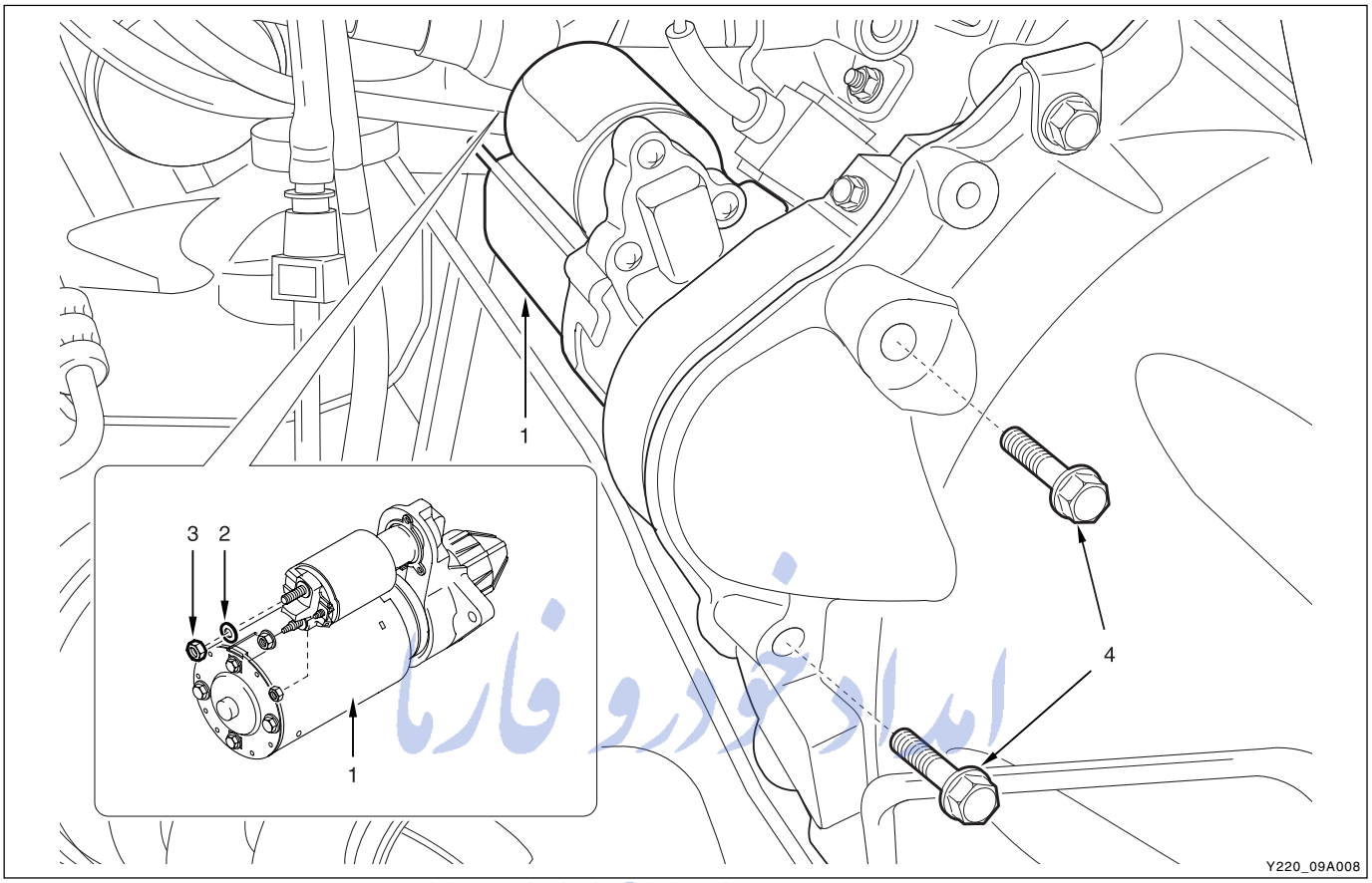

1. Starter
2. Washer
3. Nut ..... 15 Nm
4. Bolt ..... 48 Nm

ایران خودرو فارما
۰۲۱-۸۸۸۶۲۰۸۵ تلفن شبانه روزی
FarmaSOS.com

Removal and Installation

1. Disconnect the negative battery cable.
2. Disconnect the starter terminal.

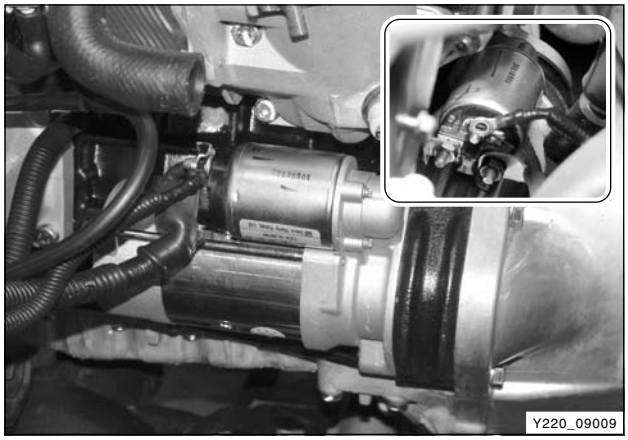

3. Lift up the vehicle and remove the front propeller shaft mounting bolts.

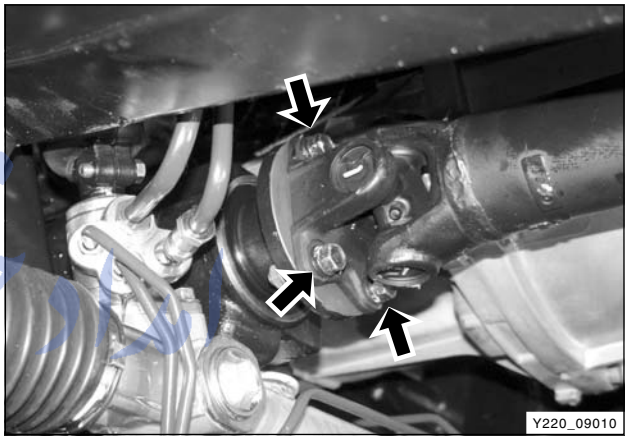

4. Remove the upper and lower mounting bolts.

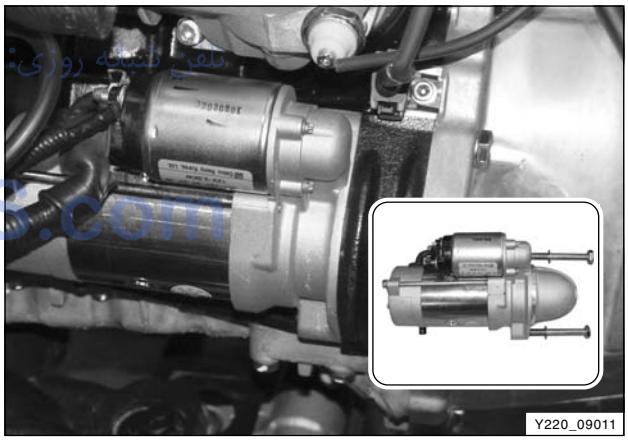

5. Install in the reverse order of removal.

ایران خودرو فارما
۰۲۱-۸۸۸۶۲۰۸۵ تلفن شبانه روزی
FarmaSOS.com

CHANGED BY	
EFFECTIVE DATE	
AFFECTED VIN	

PREHEATING SYSTEM

▶ General

Glow plug is installed on the cylinder head (combustion chamber) in the D27DT preheating control unit system. Cold starting performance has improved and exhaust gas during cold starting has reduced.

ECU receives coolant temperature and engine speed to control; after monitoring the engine preheating/after heating and glow plug diagnosis function, the fault contents will be delivered to ECU.

- Engine preheating/after heating functions
- Preheating relay activation by ECU controls
  - Senses engine temperature and controls the preheating/after heating time
  - Preheating warning light
- K-LINE for information exchanges between preheating unit and ECU
  - Transmits preheating unit self-diagnosis results to ECU
  - Transmits glow plug diagnosis results and operating status to ECU

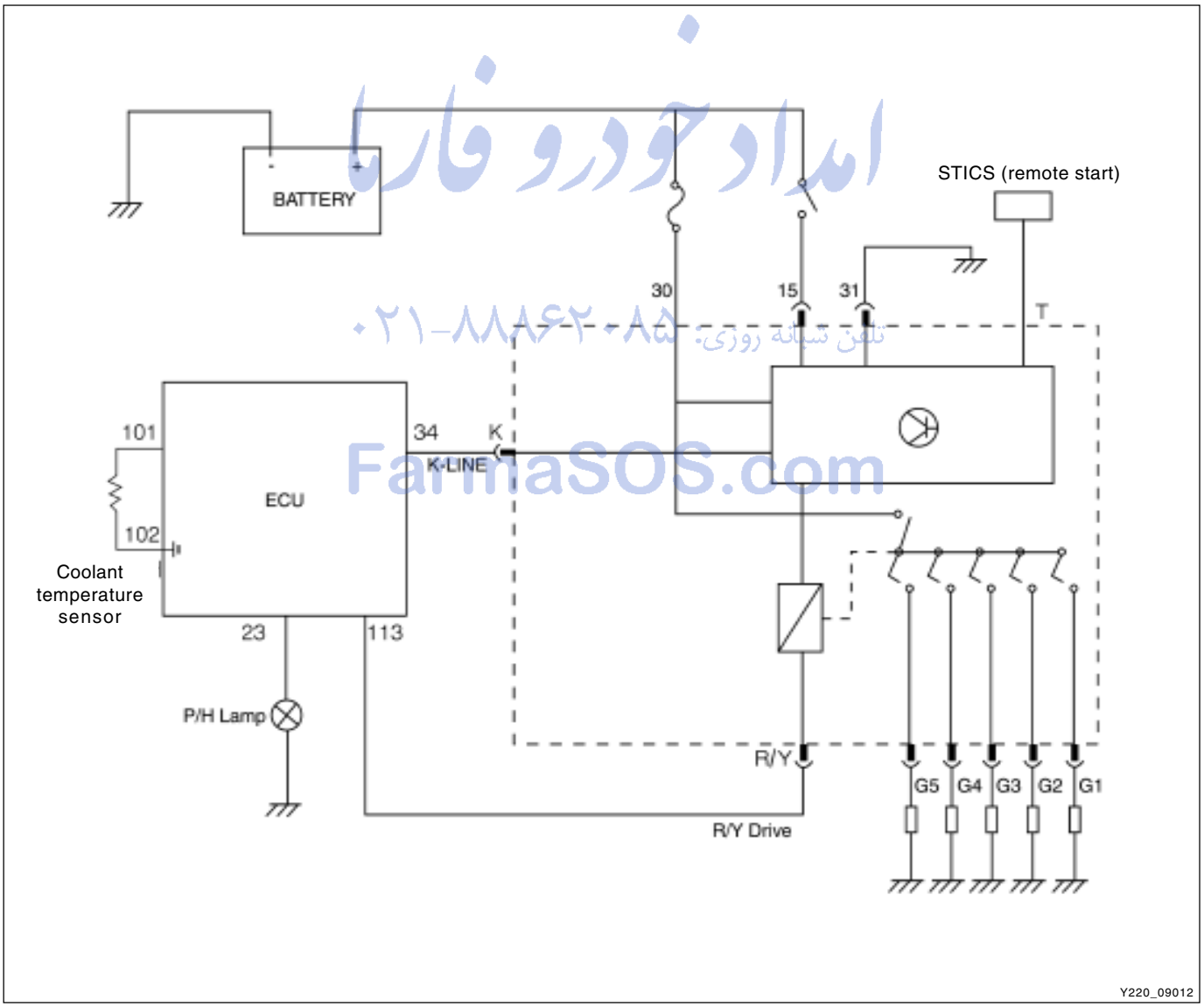

امداد خودرو فارس
۰۲۱-۸۸۸۶۲۰۸۵ تلفن شبانه روزی
FarsSOS.com

▶ Function

Preheating system controls and checks following functions and operating conditions.

- Pre-Heating
  : The power will be supplied to the glow plugs by ECU controls when the power is supplied to the IG terminal from the battery and there are normal communications with ECU within 2 seconds. The surface of glow plug will be heated up to 850°C very quickly to aid combustion by vaporizing air-fuel mixture during compression stroke.
  Preheating time is controlled by ECU.

- While engine starting
  : Help to warm up engine

- After-heating
  : When the engine is started, after-heating starts by ECU controls. The idle rpm will be increased to reduce toxic smoke, pollutants and noises.
  After-heating time is controlled by ECU.

- Checking glow plugs
  - Check each glow plug for short in circuit
  - Check each glow plug for open in circuit due to overvoltage
  - Check glow plug for short to ground

- Forceful relay shut-down
  - When glow plug is shorted to ground

- K-Line communication
  - ECU sends the results to preheating time control relay through K-Line to start communication.
  - Preheating time control relay sends messages including self-diagnosis data for glow plugs to ECU.
  - Glow plug makes communication only as response to demand.
  - When power is supplied, ECU starts self-diagnosis within 2 seconds.
  - Under the following conditions, communication error occurs.
    When there is no response from glow plug module within 2 seconds
    When an error is detected in checksum
    Less byte is received
    Error code of “Pre heating control communication fail” will be reported.

امداد خودرو فارس
تلفن شبانه روزی: ۰۲۱-۸۸۸۶۲۰۸۵
FarmaSOS.com

CHANGED BY	
EFFECTIVE DATE	
AFFECTED VIN	

PREHEATING TIME RELAY

▶ Structure

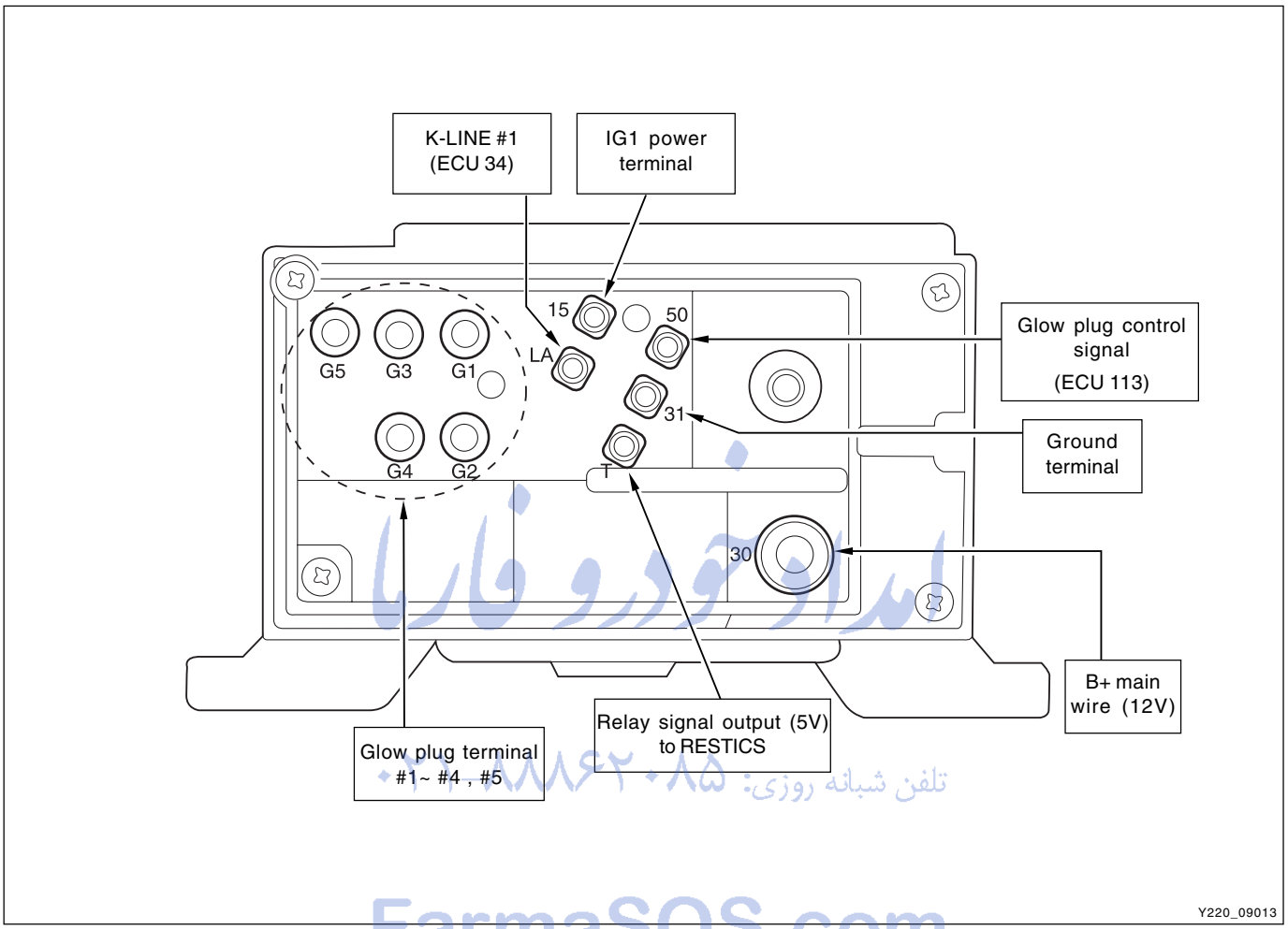

FarmaSOS.com

▶ Specifications

Description	Specification
Rated voltage	DC 12 V
Operating voltage range	DC 8 ~ 15 V
Operating range	- 40 ~ + 100°C
Relay operating voltage	Over 6.5 V
Relay releasing voltage	Over 1.5 V
Relay coil resistance	11.3 Ω
Voltage drop	Below 150 mV at each glow plug (at 16A of current)
Parasitic current	Max. 1mA

GLOW PLUG

Cylinder type glow plug is inserted into the cylinder and composed of heating pin and housing.

There are heating coil and control coil in the heating pin and those coils located inside of ceramic cover turn ON or OFF the internal switch.

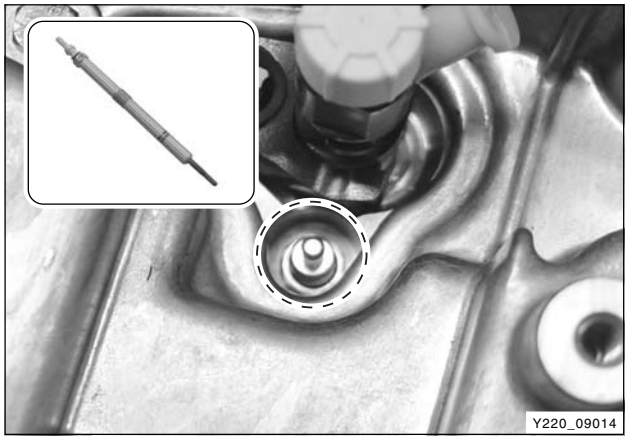

▶ Purposes of use

- Preheating before engine starting
- During engine starting
- After-heating after engine starting

▶ Conditions for glow plugs

- Prompt heating and secured temperature stabilities (temperature changes) in low operating voltage
- Should not exceed permissible max. temperature under max. operating voltage
- Heating pin should have good heat-resisting properties against combustion gas and durability
- Material of the glow plug should meet high stressing conditions (e.g., temperature, vibration and environmental factors)

امداد خودرو فارما
۰۲۱-۸۸۸۶۲۰۸۵ تلفن شبانه روزی:
FarmaSOS.com

▶ Specifications

Description	Specification
Rated voltage	11 ± 0.1 V
Current consumption	Initial current I_{intial} < 30.0 A
Preheating time (From ambient temperature up to 85°C)	$T_{850°C}$ = 5 ± 1.5 sec.
Operating temperature	900 °C
Tightening torque	15 + 3 Nm

▶ Trouble Code

Refer to “Diagnosis” section in this manual.

CHANGED BY	
EFFECTIVE DATE	
AFFECTED VIN	



Removal and Installation

1. Turn the ignition switch to “OFF” position and disconnect the negative battery cable.
2. Set aside the harnesses on the cylinder head.

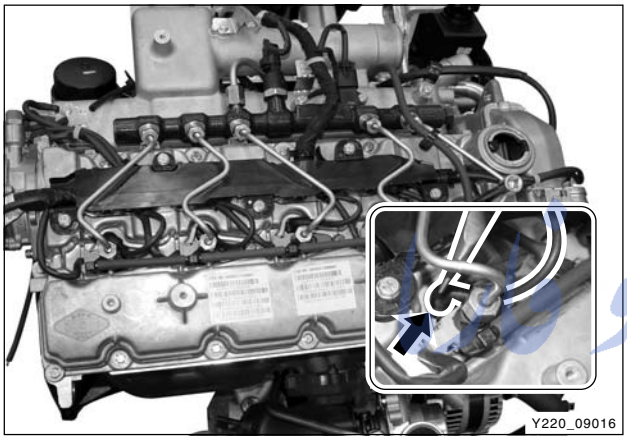

3. Disconnect the glow plug connectors and loosen the glow plugs.

   Installation Notice

Tightening torque	15 Nm

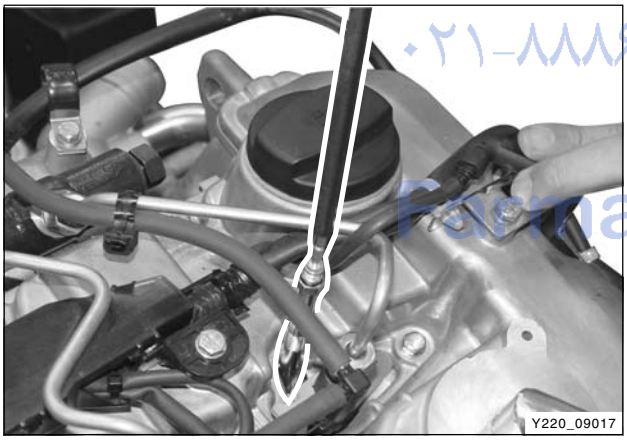

4. Remove the glow plugs from the cylinder head with a special tool. Plug the openings of the glow plugs with sealing caps.

امداد خودرو
۰۲۱-۸۸۸۶۲۰۸۵
PamaSOS.com

SPECIAL TOOLS AND EQUIPMENT

Name and Part Number	Application
Glow plug remover Y220_09018	Removal of glow plug 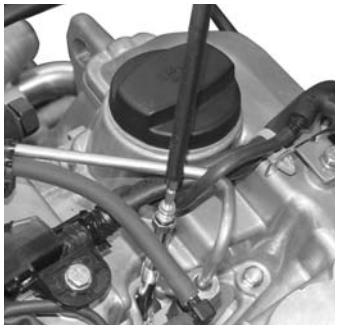 Y220_09019

امداد خودرو فارما
تلفن شبانه روزی: ۰۲۱-۸۸۸۶۲۰۸۵
FarmaSOS.com

MEMO

امداد خودرو فارما
تلفن شبانه روزی: ۰۲۱-۸۸۸۶۲۰۸۵
FarmaSOS.com

SECTION DI10

DIAGNOSIS

امداد خودرو فارما

تلفن شبانه روزی: ۰۲۱-۸۸۸۶۲۰۸۵

FarmaSOS.com

SECTION DI10

DIAGNOSIS

Table of Contents

SCAN-I OPERATING PROCEDURES - XDi270 ENGINE DI10-3

TROUBLE DIAGNOSIS TABLE DI10-23

FUEL SYSTEM DIAGNOSIS DI10-177

امداد خودرو فارما

تلفن شبانه روزی: ۰۲۱-۸۸۸۶۲۰۸۵

FarmaSOS.com

CHANGED BY	
EFFECTIVE DATE	
AFFECTED VIN	

امداد خودرو فارما

تلفن شبانه روزی: ۸۸۸۶۲۰۸۵-۰۲۱

FarmaSOS.com

SCAN-I OPERATING PROCEDURES - XDi270 ENGINE

ENTERING DIAGNOSIS PROCEDURES DI10-4

FUNCTION SELECTION DI10-6

Check the trouble code DI10-6
Sensor data check DI10-7
Actuator check DI10-8
Trouble code clear DI10-10
ECU identification DI10-12
Injector coding (C2I) DI10-13
Leak detection DI10-15
Variant coding DI10-16
ECU replace DI10-18

امداد خودرو فارما
تلفن شبانه روزی: ۰۲۱-۸۸۸۶۲۰۸۵
FarmaSOS.com

SCAN-I OPERATING PROCEDURES - D27DT ENGINE

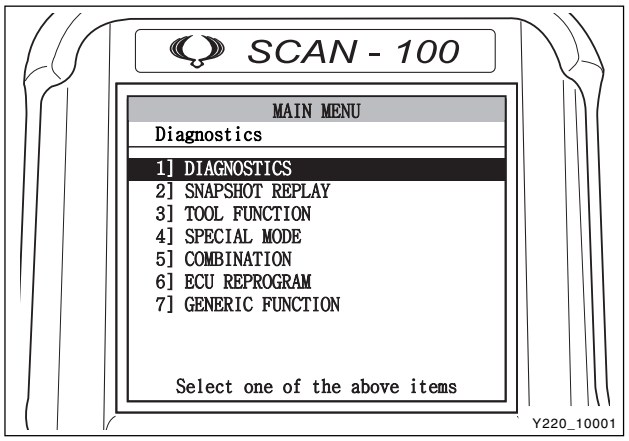

ENTERING DIAGNOSIS PROCEDURES

1. Select “1] DIAGNOSIS” and press “ENTER” in “MAIN MENU” screen.

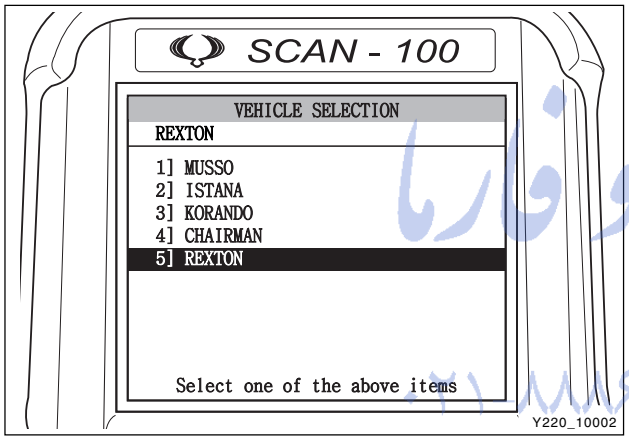

2. Select “5] REXTON” and press “ENTER” in “VEHICLE SELECTION” screen.

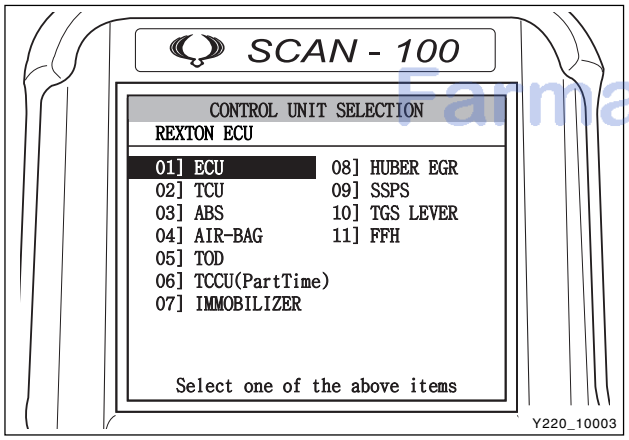

3. Select “1] ECU” and press “ENTER” in “CONTROL UNIT SELECTION” screen.

امداد خودروفارما
تلفن شبانه روزی: ۰۲۱۸۸۸۶۲۰۸۵
FarmaSOS.com

4. Select “4] XDi 270” and press “ENTER” in “MODEL SELECTION” screen.

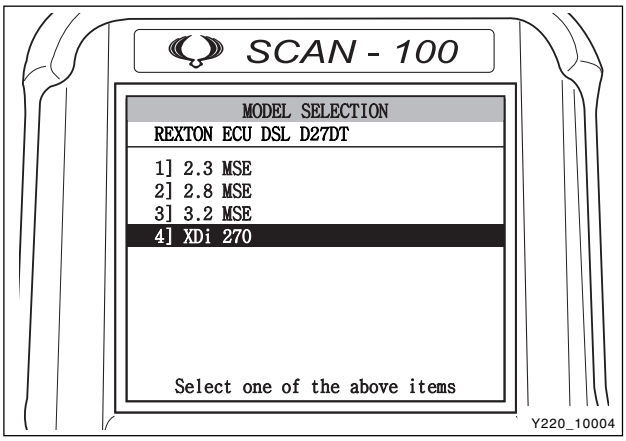

5. The “FUNCTION SELECTION” screen is displayed.

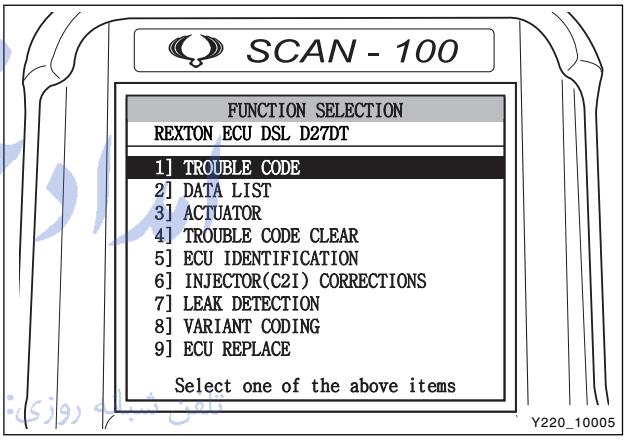

FarmaSOS.com

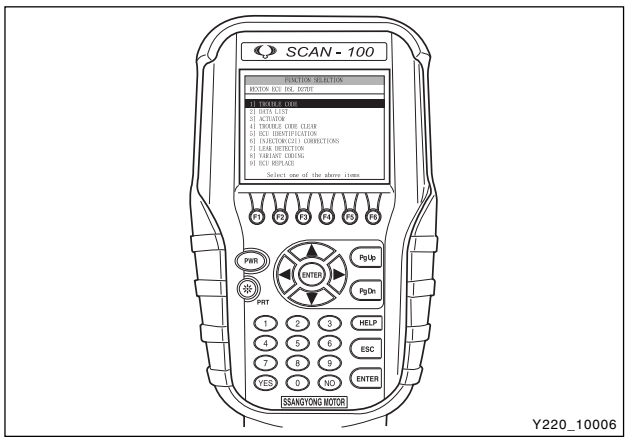

FUNCTION SELECTION

Check the Trouble Code

※ Preceding work: Perform the “Entering Diagnosis Procedures”

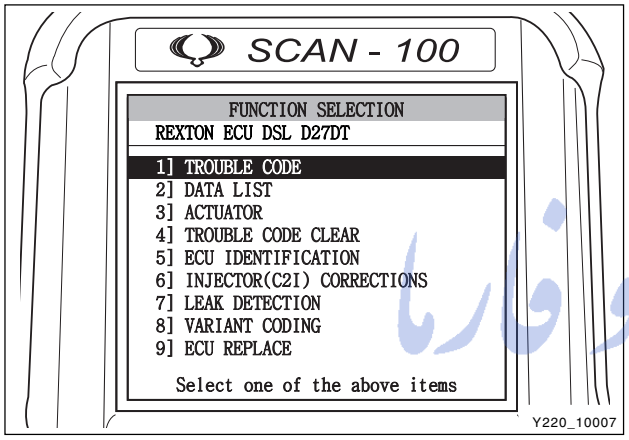

1. Select “1] TROUBLE CODE” and press “ENTER” in “FUNCTION SELECTION” screen.

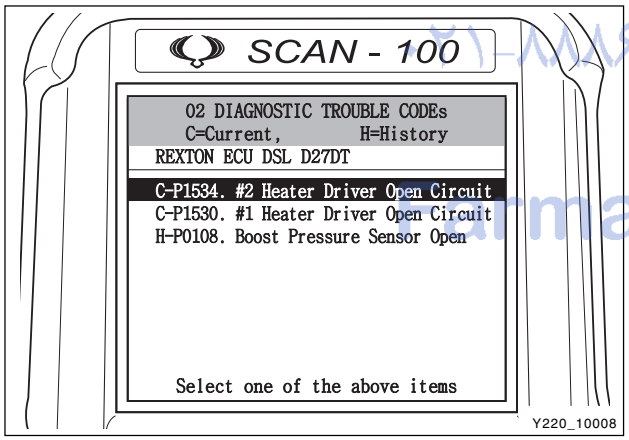

2. The “DIAGNOSTIC TROUBLE CODEs” screen is displayed and it shows the trouble.

Note

If there is not any fault, “NO TROUBLE DETECTED” message appears.

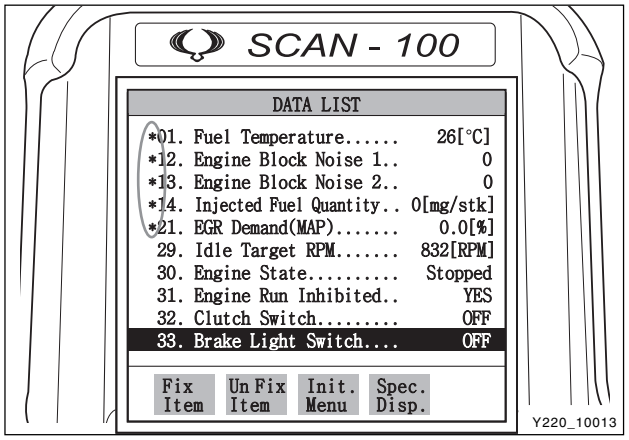

3. When selecting a trouble code, then
   if you press “ENTER”: Displays the sensor data for the detected trouble (Freeze Frame Mode).
   if you press “HELP”: Displays the help tips for the detected trouble.

امداد خودرو فارما
PharmaSOS.com

Sensor Data Check

※ Preceding Work: Perform the “Entering Diagnosis Procedures”

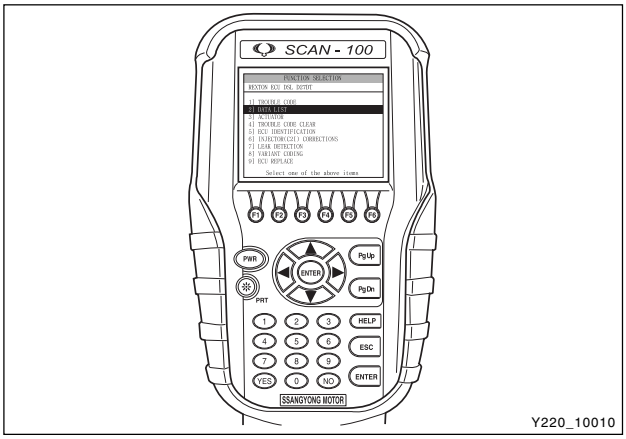

1. Select “2] DATA LIST” and press “ENTER” in “FUNCTION SELECTION” screen.

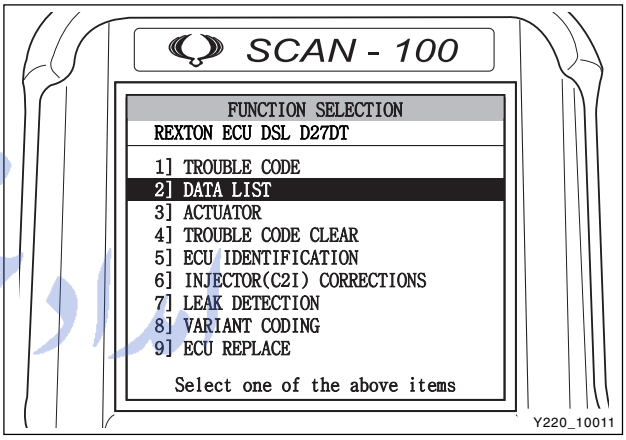

2. The screen shows approx. 54 sensor data.

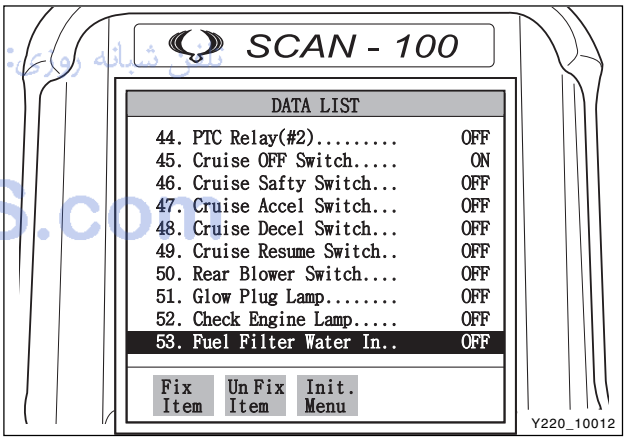

3. Select the items you want to see and press “F1” key to freeze them.

Note

You can freeze up to 5 items (*: selected items).

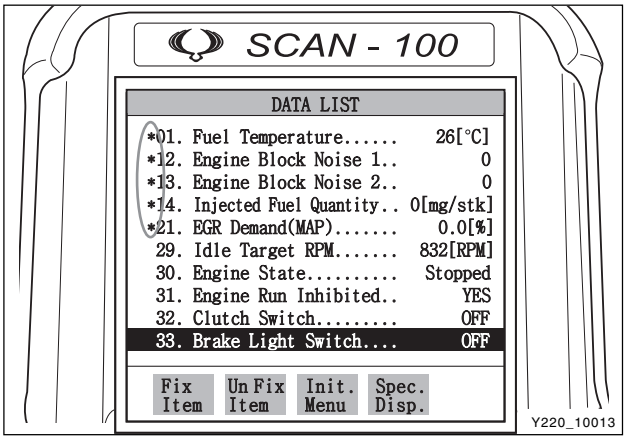

فرادخودرو فارما
۰۲۱-۸۸۸۶۲۰۸۵ تلفن شبانه روزی:
FarmaSOS.com

CHANGED BY	
EFFECTIVE DATE	
AFFECTED VIN	

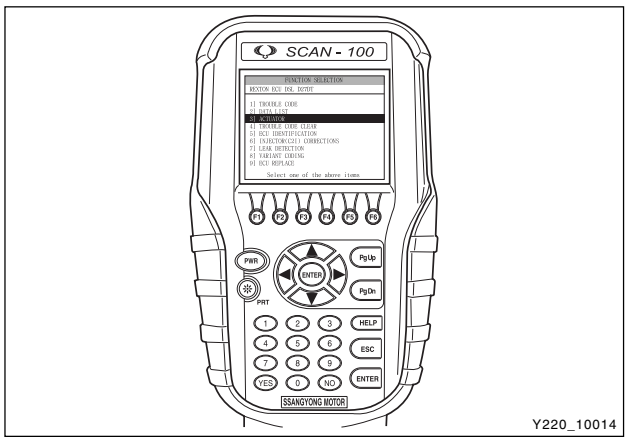

Actuator Check

※ Preceding Work: Perform the “Entering Diagnosis Procedures”

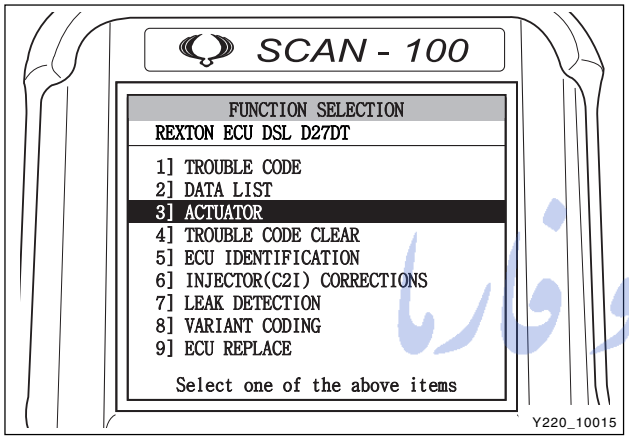

1. Select “3] ACTUATOR” and press “ENTER” in “FUNCTION SELECTION” screen.

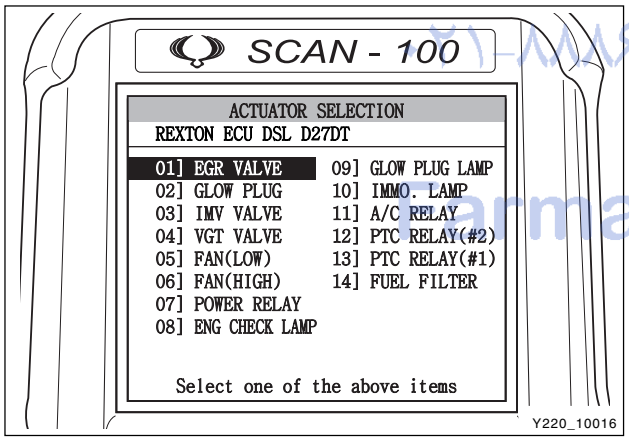

2. The screen shows 14 items. Select the item you want to see and press “ENTER”.

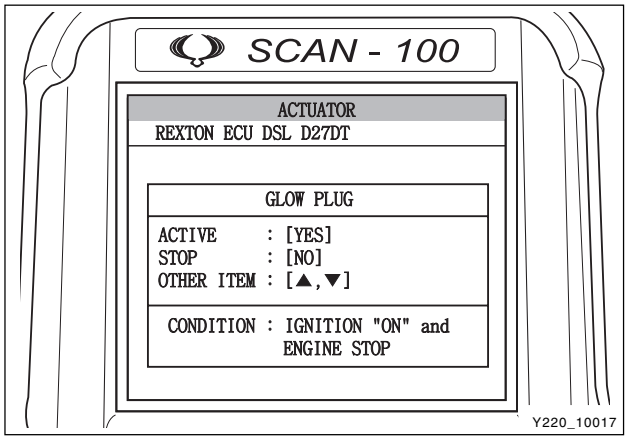

3. For example, if you select “02] GLOW PLUG” item and press “ENTER”, the screen as shown in figure is displayed.

امداد خودرو فارما
تلفن پشتیبانی روزانه ۲۱-۸۸۸۶۲۰۸۵
FarmaSOS.com

4. If you want to operate the glow plug relay, press "YES" key. The "OPERATING" message appears and the relay operation alarm sounds.

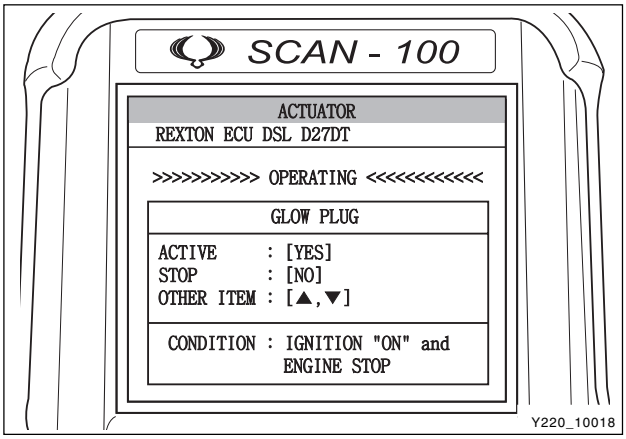

5. If you want to stop the operation press "NO" key in keyboard.

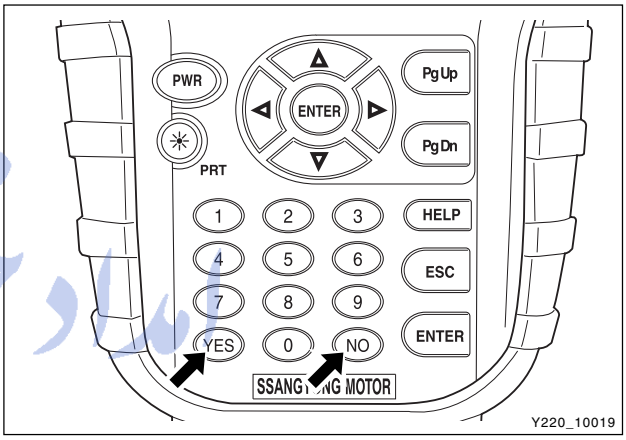

تلفن شبانه روزی: ۰۲۱-۸۸۸۶۲۰۸۵
FarmaSOS.com

CHANGED BY	
EFFECTIVE DATE	
AFFECTED VIN	

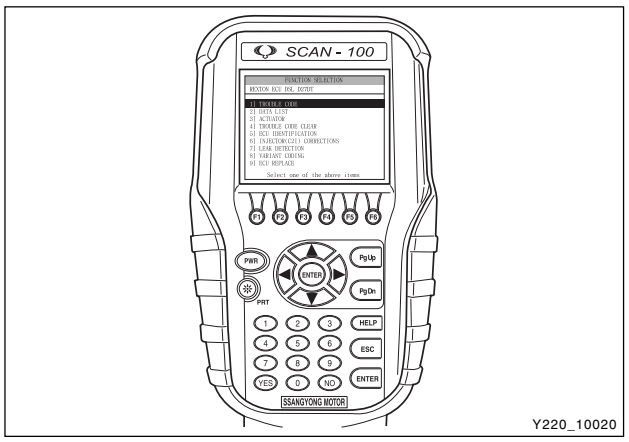

Y220_10020

Trouble Code Clear

※ Preceding Work: Perform the “Entering Diagnosis Procedures”

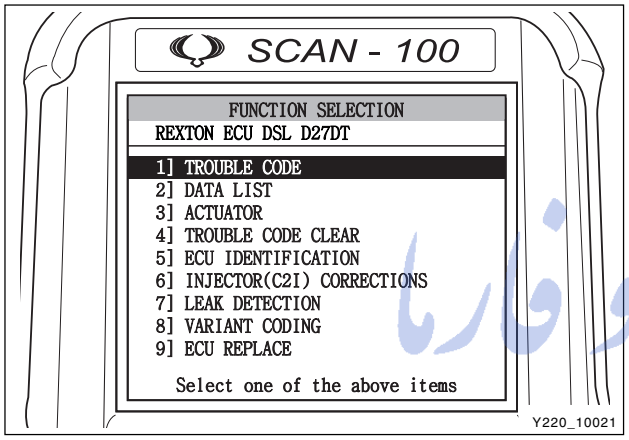

Y220_10021

1. Select “1] TROUBLE CODE” and press “ENTER” in “FUNCTION SELECTION” screen.

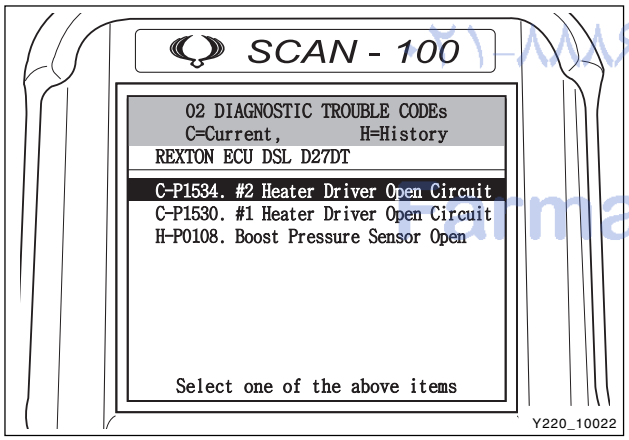

Y220_10022

2. The “DIAGNOSTIC TROUBLE CODEs” screen is displayed and it shows the trouble.

Note

C = Current trouble, H = History trouble

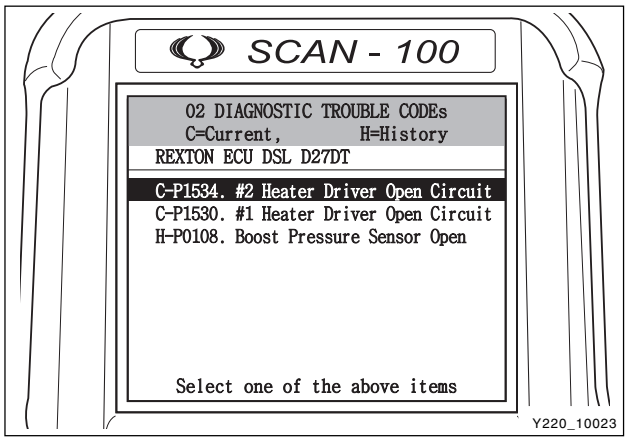

Y220_10023

3. Fix the trouble and go back to “1] TROUBLE CODE” screen and check if the trouble has been changed to “H (History trouble code)” code.

امداد خودرو فارما
PharmaSOS.com

4. If the trouble has been change to “H (History trouble code)” code, press “(ESC)” key to go back to “FUNCTION SELECTION” screen. In this screen, select “4] TROUBLE CODE CLEAR” and press “(ENTER)”.

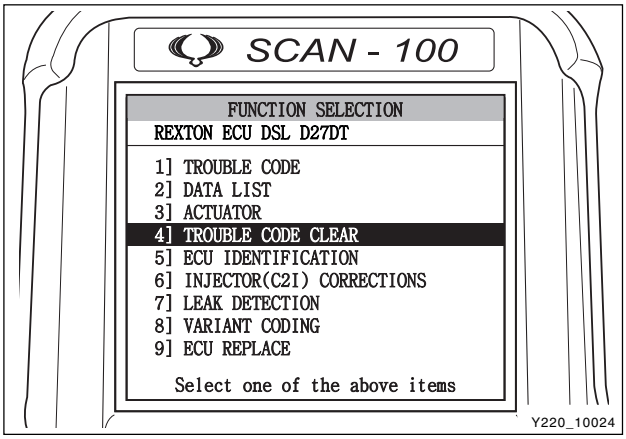

5. The “TROUBLE CODE CLEAR” screen is displayed. If you press “(ENTER)”, only the history trouble codes will be cleared.

Note

- ***Current trouble codes will not be cleared.***
- ***Check the trouble codes after clearing the trouble codes.***

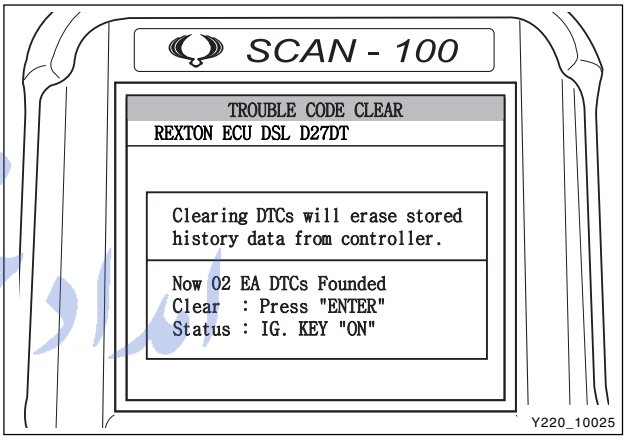

امداد خودرو فارما
تلفن شبانه روزی: ۰۲۱-۸۸۸۶۲۰۸۵
FarmaSOS.com

CHANGED BY	
EFFECTIVE DATE	
AFFECTED VIN	

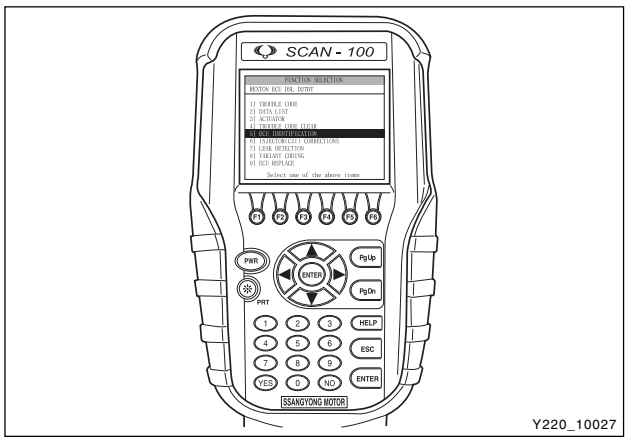

ECU Identification

※ Preceding Work: Perform the “Entering Diagnosis Procedures”

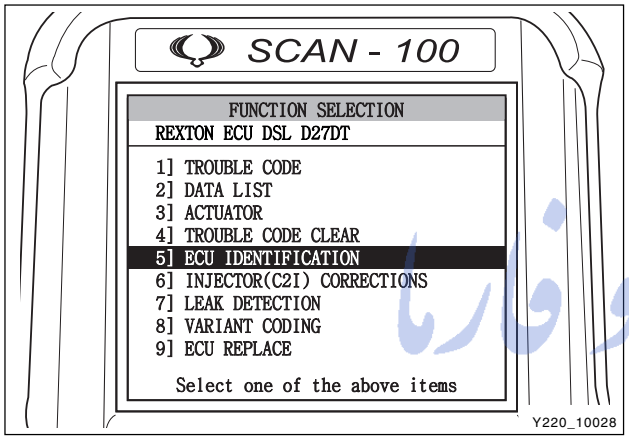

1. Select “1] ECU IDENTIFICATION” and press “ENTER” in “FUNCTION SELECTION” screen.

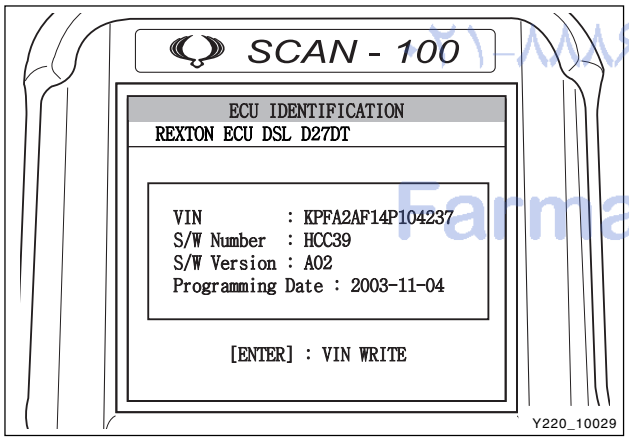

2. The “ECU IDENTIFICATION” screen that shows the VIN, ECU software number, ECU software version and programming date is displayed.

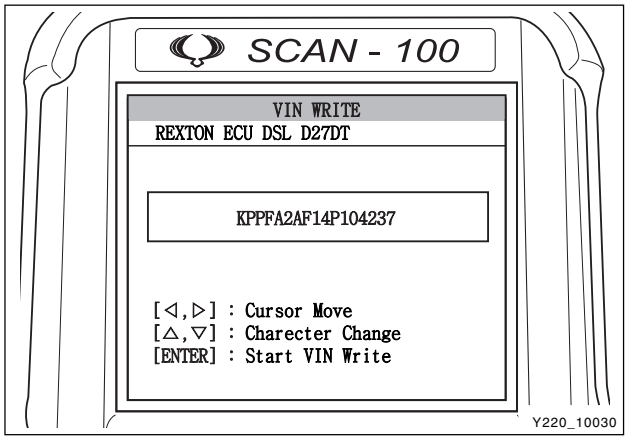

3. If you replaced the ECU, press “ENTER” to input the vehicle identification number.

امداد خودرو فارما
FarmaSOS.com

CHANGED BY	
EFFECTIVE DATE	
AFFECTED VIN	

Injector Coding (C2I)

※ Preceding Work: Perform the “Entering Diagnosis Procedures”

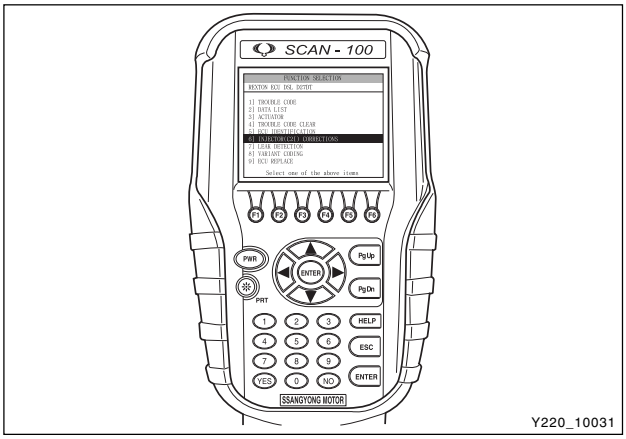

Y220_10031

Notice

If the injector/ECU has been replaced or the injector system defective is suspected, go to C2I Coding item and check the injector and coded injector C2I value.

1. Select “6] INJECTOR (C2I) CORRECTIONS” and press “ENTER” in “FUNCTION SELECTION” screen.

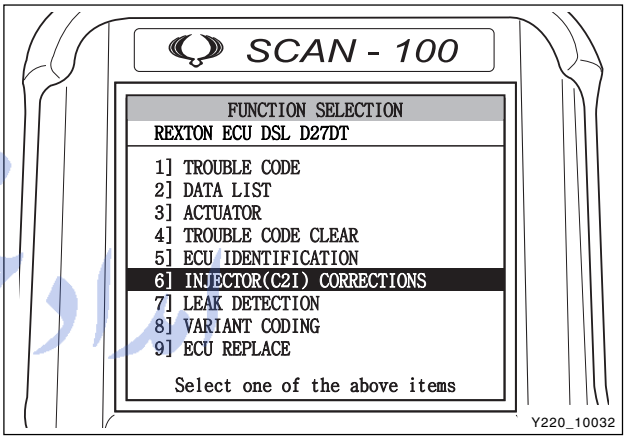

Y220_10032

2. The “INJECTOR (C2I) CORRECTIONS” screen that shows current C2I coding values of #1 to #5 injector is displayed.
3. If you replaced the ECU, enter the C2I value of the relevant injector.

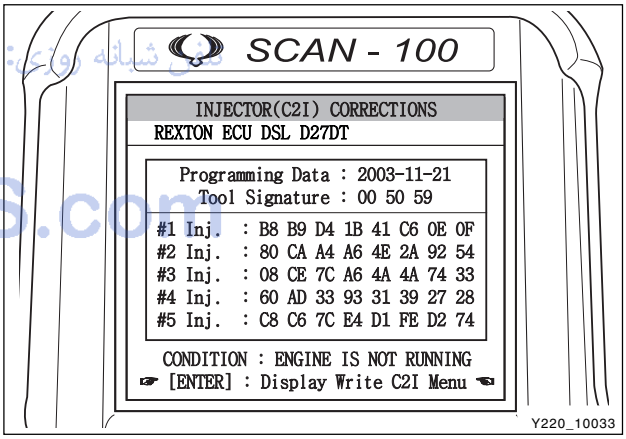

Y220_10033

Note

- ***The C2I value of replacing injector is recorded in the label.***
- ***C2I coding number: 16 digits (ex, B1 B9 D4 1B 43 C6 0E 4F)***



Y220_10034

فروش شبانه روزی: ۰۹۱۲۰۸۸۱۶۲۵
FarmaSOS.com

CHANGED BY	
EFFECTIVE DATE	
AFFECTED VIN	

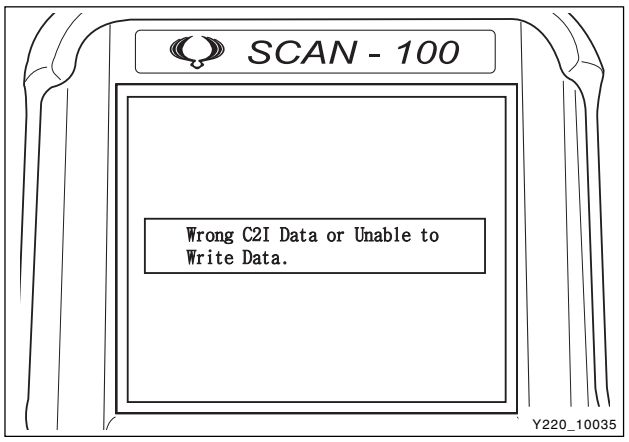

3-1. If you enter the invalid C2I value of the relevant injector, the message as shown in figure appears with alarm sound.

Note

If you want to go back to previous screen, press "ESC" key. You can see the previous C2I value.

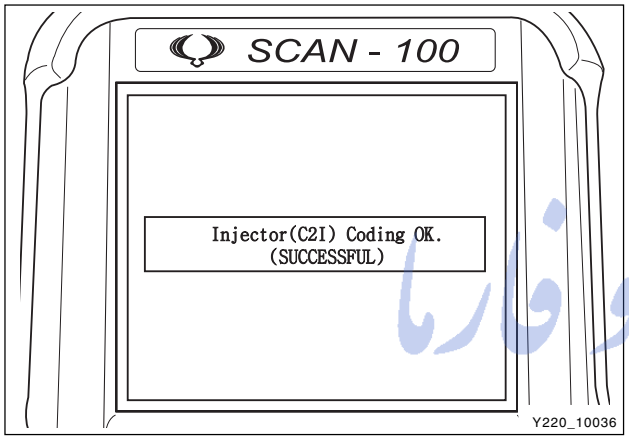

3-2. If you enter the valid C2I value of the relevant injector, the message as shown in figure appears with alarm sound.

امداد خودرو فارما
تلفن شبانه روزی: ۰۲۱-۸۸۸۶۲۰۸۵
FarmaSOS.com

Leak Detection

※ Preceding Work: Perform the “Entering Diagnosis Procedures”

Note

This item is for checking the high fuel pressure after the IMV supply line of HP pump in DI engine fuel system. If you still suspect that the fuel pressure system is defective even after no trouble is detected, perform the fuel pressure test again by using a fuel pressure tool kit.

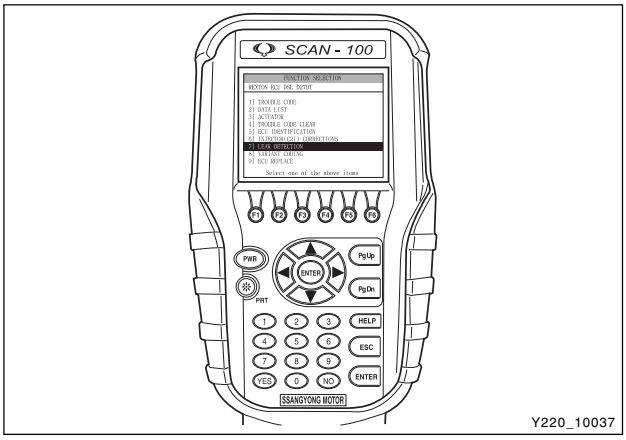

1. Select “7] LEAK DETECTION” and press “ENTER” in “FUNCTION SELECTION” screen.

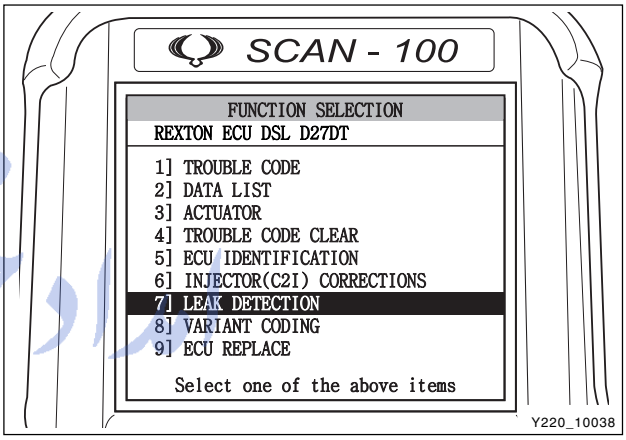

2. The “LEAK DETECTION” screen that shows the checking conditions as shown in figure is displayed.

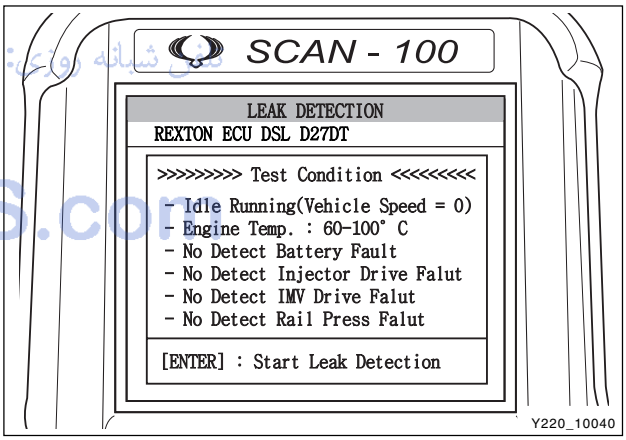

FarmaSOS.com

CHANGED BY	
EFFECTIVE DATE	
AFFECTED VIN	

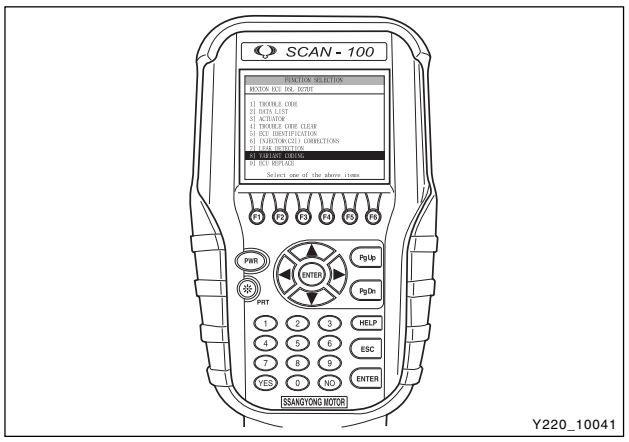

Variant Coding

※ Preceding Work: Perform the “Entering Diagnosis Procedures”

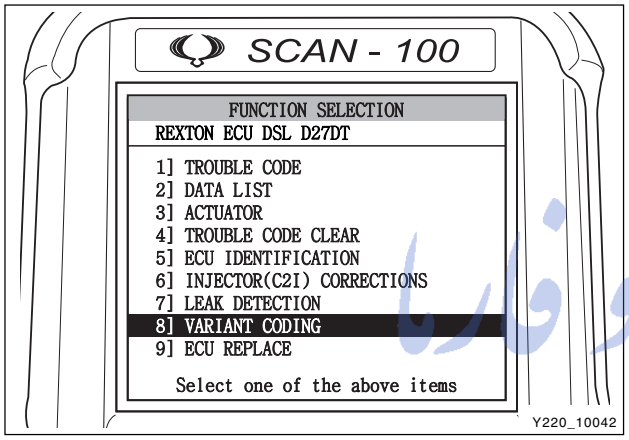

1. Select “8] VARIANT CODING” and press “ENTER” in “FUNCTION SELECTION” screen.

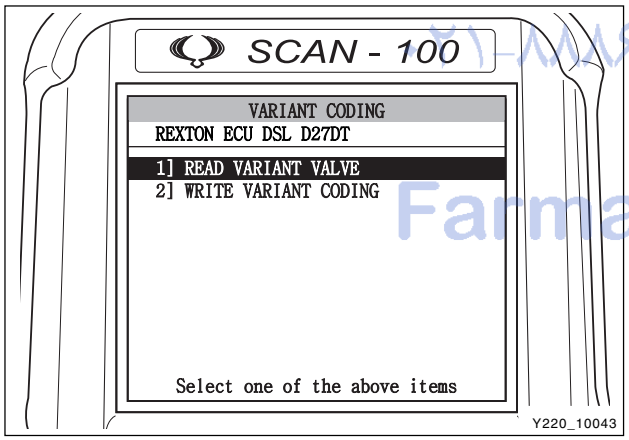

2. When the “VARIANT CODING” screen is displayed, select “1] READ VARIANT VALUE” and press “ENTER”.

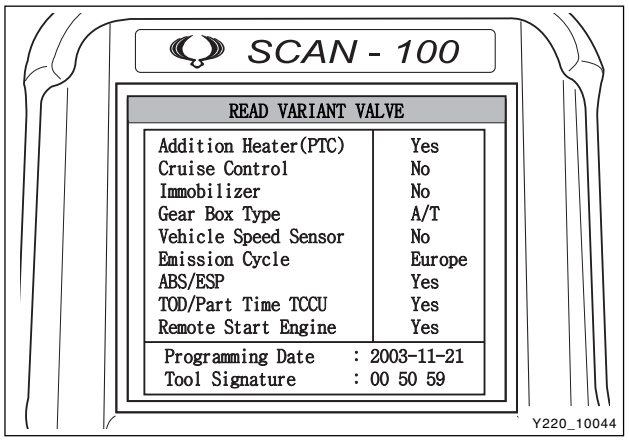

3. The “VARIANT CODING” screen that shows currently equipped devices is displayed.

امداد خودرو فارما
FarmaSOS.com

4. If you need to change the variant coding, press "ESC" key to go back to "VARIANT CODING" screen. In the screen, select "2] WRITE VARIANT CODING" and press "ENTER".

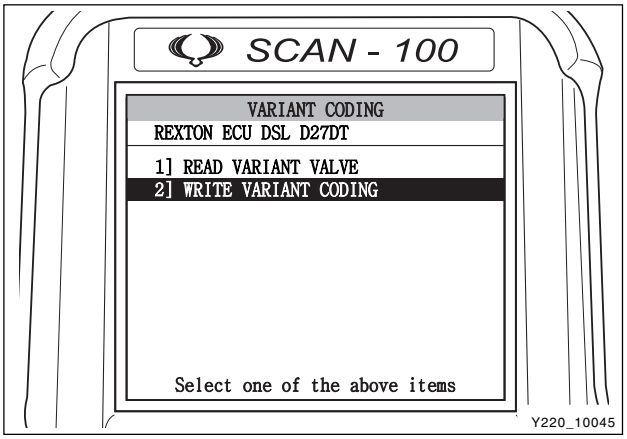

5. When the "VARIANT CODING" screen is displayed, change the item by using arrow keys.

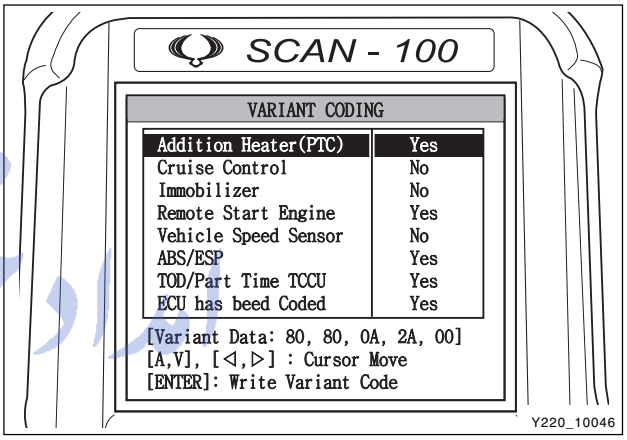

6. If you press "ENTER", the message as shown in figure appears. And, then "VARIANT CODING" screen is displayed.

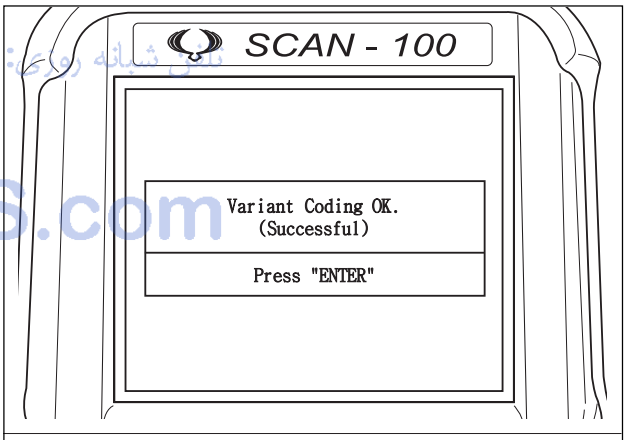

7. Select "READ VARIANT VALUE" to see the coding coded value.

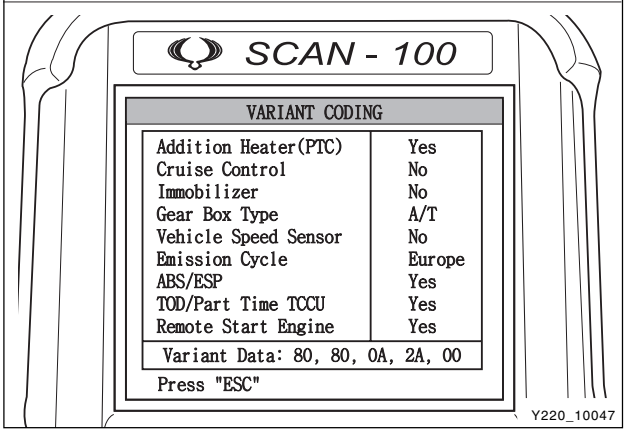

FarmaSOS.com

CHANGED BY	
EFFECTIVE DATE	
AFFECTED VIN	

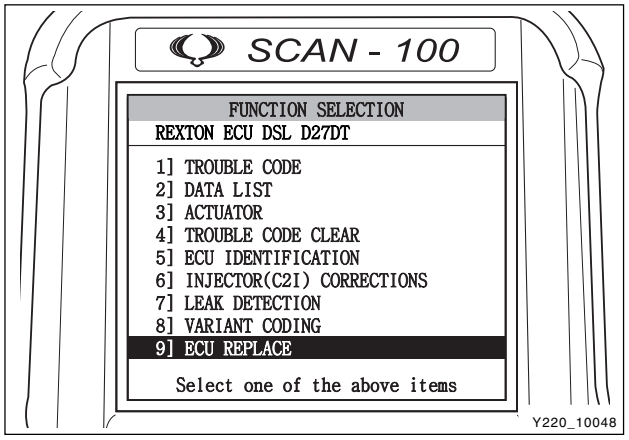

ECU Replace

※ Preceding Work: Perform the “Entering Diagnosis Procedures”

1. Select “9] ECU REPLACE” and press “ENTER” in “FUNCTION SELECTION” screen.

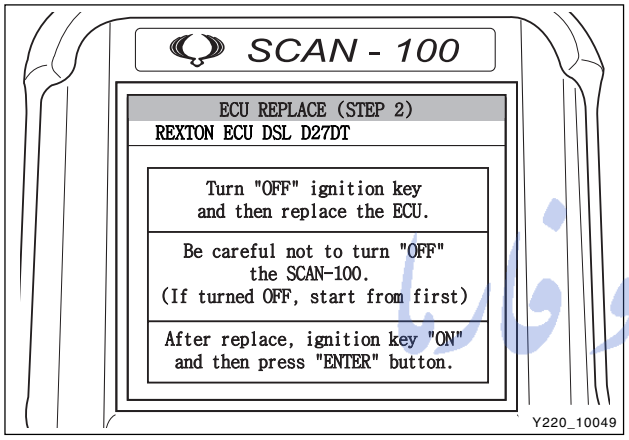

2. When the “ECU REPLACE (STEP 2)” screen is displayed followed by “ECU REPLACE (STEP 1) screen, turn the ignition “OFF” and remove the currently installed ECU.

Notice

Do not turn off the Scan-100 at this time.
Record the below data:
- ***Vehicle identification number***
- ***Variant coding value***
- ***C2I coding value***
- ***Multi calibration***

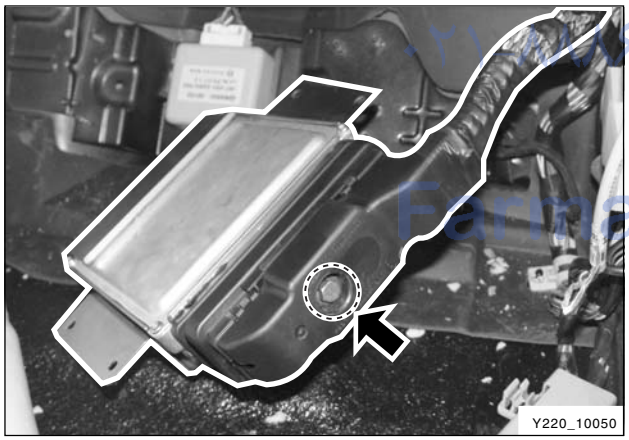

3. Install the new ECU.

FarmaSOS.com
تلفن شبانه روزی: ۰۲۱۷۶۶۲۰۸۵

4. If you turn the ignition switch to “ON” position and press “ENTER”, the message as shown in figure 1 (system initialization) appears, and then “MULTI CALIBRATION SELECTION” screen (fig. 2) is displayed.

figure 1

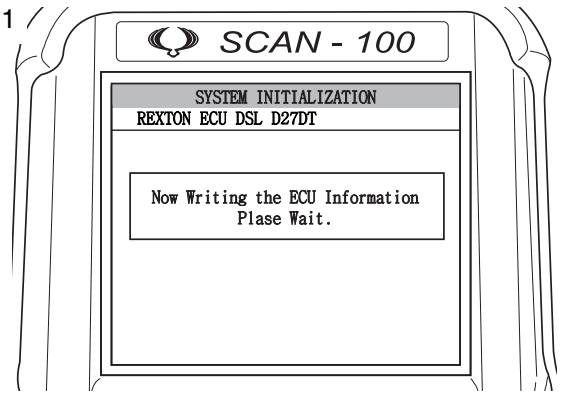

figure 2

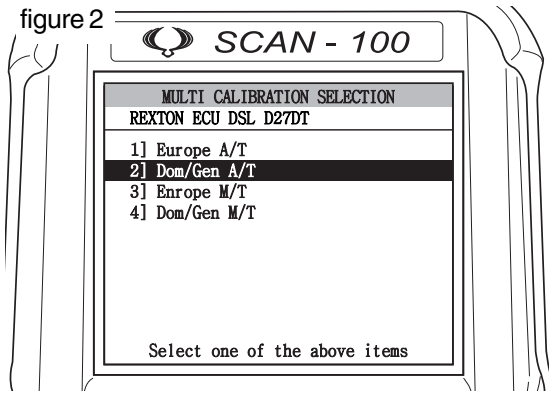

Y220_10051

5. In “MULTI CALIBRATION SELECTION” screen, select “2] DOM/GEN” for automatic transmission equipped vehicle and select “4] DOM/GEN” for manual transmission equipped vehicle.

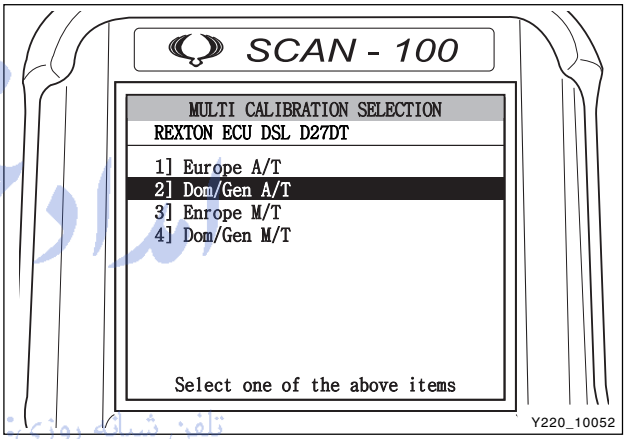

Y220_10052

6. When you press “ENTER”, the processing message as shown in figure appears.

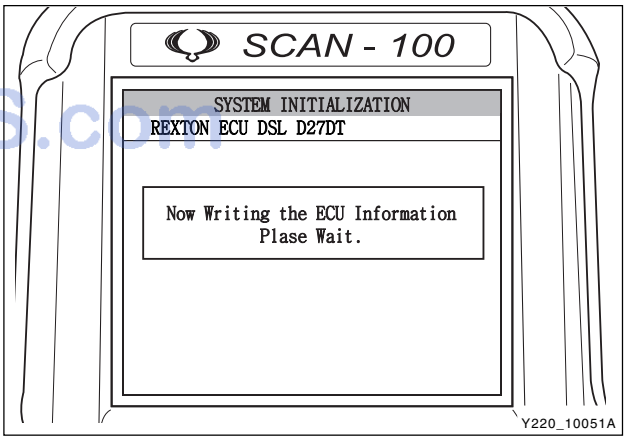

Y220_10051A

FarmaSOS.com

CHANGED BY	
EFFECTIVE DATE	
AFFECTED VIN	

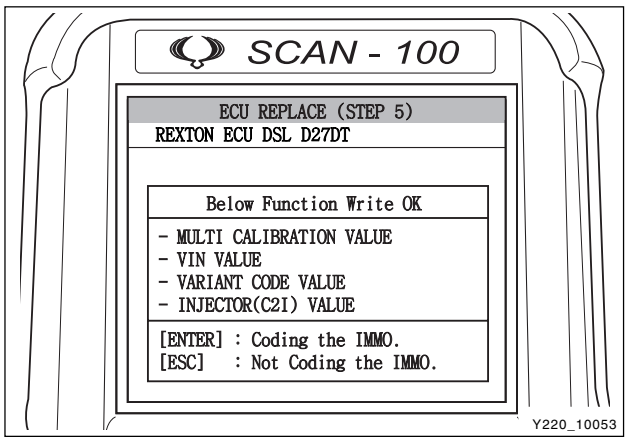

7. If the multi calibration is completed successfully, “ECU REPLACE (STEP 5) screen is displayed.

   Backup data:

   - Multi calibration value
   - VIN value
   - Variant code value
   - Injector (C2I) value

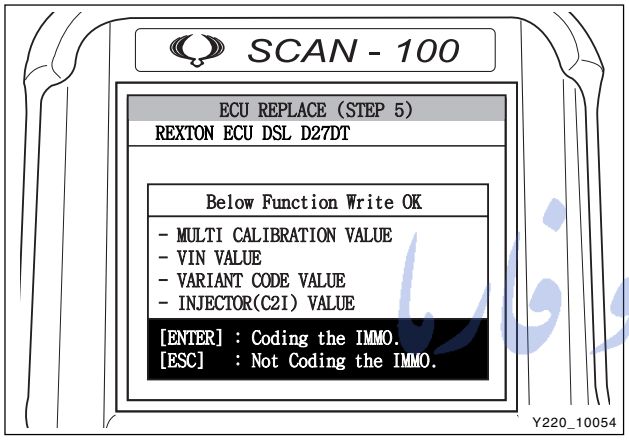

8. In immobilizer equipped vehicle, the immobilizer coding should be done after completed the multi calibration.

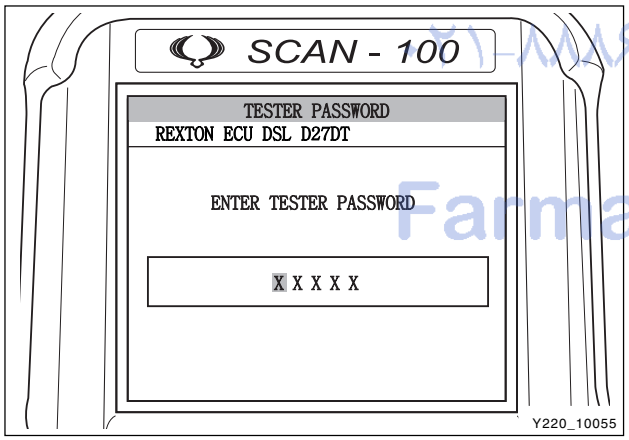

9. Press “ENTER” and enter the user password.

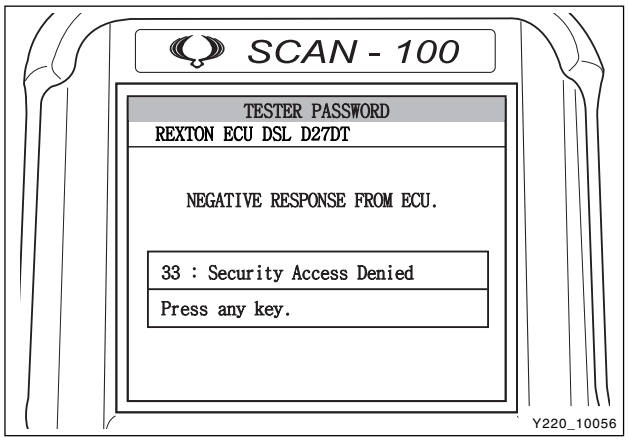

10. If the password is invalid, the “access denied” screen as shown in figure is displayed.

امداد خودرو فارس
تلفن شبانه روزی: ۰۸۵-۸۸۸۶۲۰۸۵
FarmaSOS.com

11. If the password is valid, an immobilizer coding is started.

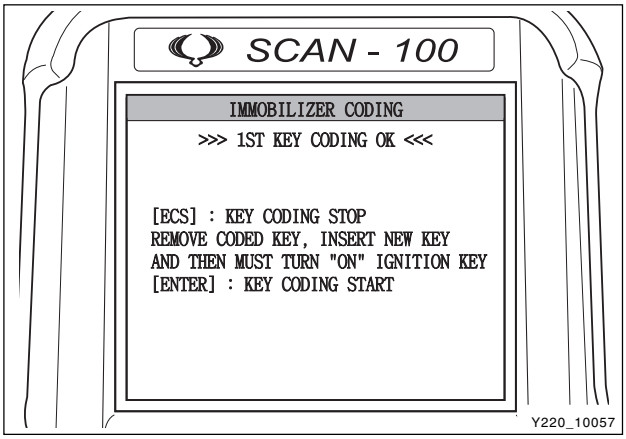

12. If you want to code for additional keys, remove the first key from key switch and insert the second key. Turn it to “ON” position and press “(ENTER)” to proceed.

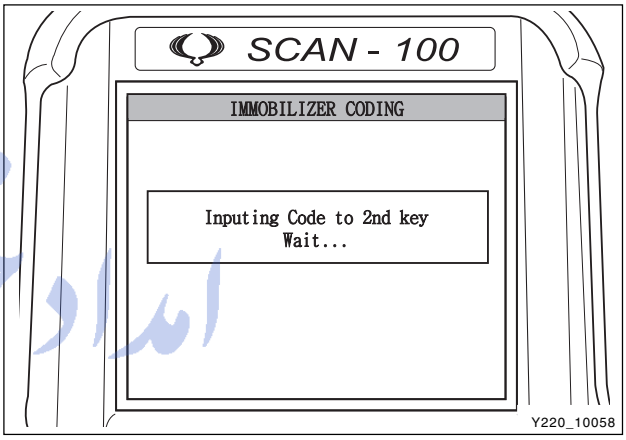

13. You can code up to five keys with same manner.

14. When the immobilizer coding is completed, press “(ESC)”. The completion message as shown in figure appears.

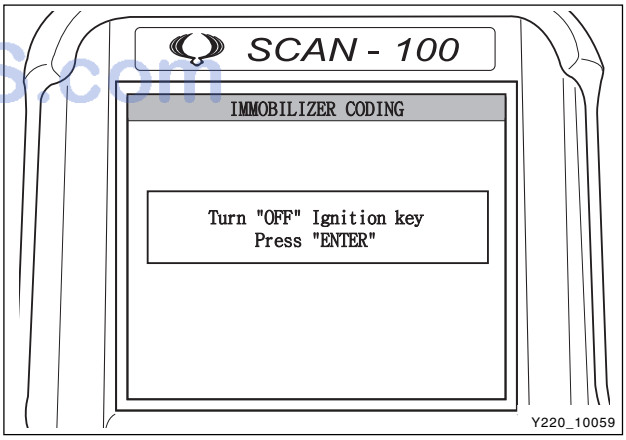

امداد خودرو فارما
تلفن شبانه روزی: ۰۲۱-۸۸۸۶۲۰۸۵
FarmaSOS.com

CHANGED BY	
EFFECTIVE DATE	
AFFECTED VIN	

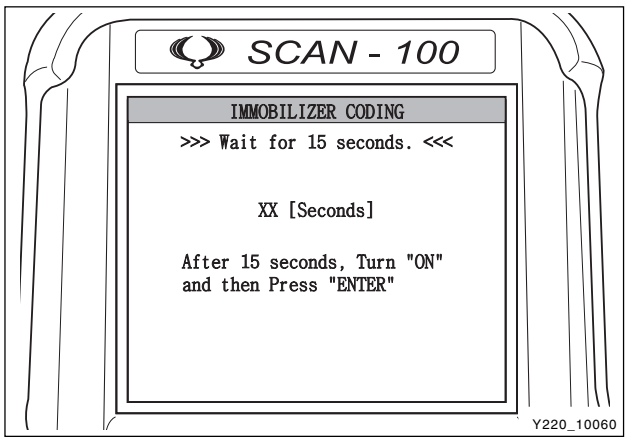

15. When you turn the ignition key to “OFF” position, the message screen as shown in figure is displayed. Wait for 15 seconds and turn the ignition key to “ON” position.

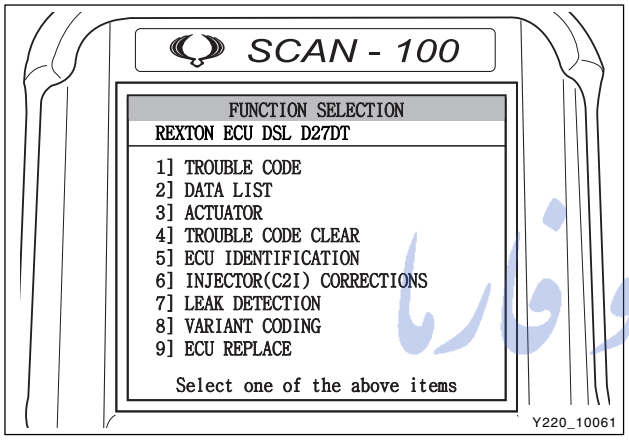

16. Press “ENTER” to return to “MAIN MENU” screen.

امداد خودرو فارما
تلفن شبانه روزی: ۰۲۱-۸۸۸۶۲۰۸۵
FarmaSOS.com

TROUBLE DIAGNOSIS TABLE

INDEX OF DTC 10D-24, 71
Trouble diagnosis table 10D-27
Trouble diagnosis procedures 10D-75

امداد خودرو فارما
تلفن شبانه روزی: ۰۲۱-۸۸۸۶۲۰۸۵
FarmaSOS.com

CHANGED BY	
EFFECTIVE DATE	
AFFECTED VIN	

INDEX OF DTC

P0102 Low HFM Sensor Signal (Circuit Open) DI10-27
P0103 High HFM Sensor Signal (Circuit Short) DI10-27
P0100 Air Mass Flow (HFM) Malfunction DI10-28
P0344 Cam Position Sensor Malfunction DI10-28
P0341 Cam Position Sensor Malfunction (Poor Synchronization) DI10-28
P0219 Too Small Clearance of Crank Angle Sensor .. DI10-28
P0336 Too Large Clearance of Crank Angle Sensor . DI10-29
P0372 Crank Angle Sensor Malfunction DI10-29
P1107 Barometric Sensor Circuit Short/GND Short ... DI10-29
P1108 Barometric Sensor Circuit Short DI10-29
P1105 Barometric Sensor Circuit Short DI10-29
P0562 Low Battery Voltage DI10-30
P0563 High Battery Voltage DI10-30
P0560 Battery Voltage Malfunction DI10-30
P0109 Low Booster Pressure Sensor Signal DI10-31
P0106 High Booster Pressure Sensor Signal DI10-31
P0107 Booster Pressure Sensor Open/GND Short ... DI10-32
P0108 Booster Pressure Sensor Short DI10-32
P0105 Supply Voltage Fault to Booster Pressure Sensor DI10-33
P1106 Booster Pressure Sensor Malfunction DI10-33
P1109 Booster Pressure Sensor Initial Check Fault . DI10-34
P0571 Brake Pedal Switch Fault DI10-34
P1572 Brake Lamp Signal Fault DI10-35
P1571 Brake Lamp Signal Fault DI10-35
P1286 Low Resistance for Injector #1 wiring harness . DI10-35
P1287 High Resistance for Injector #1 wiring harness .. DI10-36
P1288 Low Resistance for Injector #2 wiring harness . DI10-36
P1289 High Resistance for Injector #2 wiring harness .. DI10-36
P1292 Low Resistance for Injector #4 wiring harness . DI10-37
P1293 High Resistance for Injector #4 wiring harness .. DI10-37
P1294 Low Resistance for Injector #5 wiring harness . DI10-37
P1295 High Resistance for Injector #5 wiring harness .. DI10-38
P1290 Low Resistance for Injector #3 wiring harness . DI10-38
P1291 High Resistance for Injector #3 wiring harness .. DI10-38
P0704 Clutch switch malfunction DI10-38
P1115 Coolant Temperature Sensor Malfunction DI10-39
P0118 Coolant Temperature Sensor Malfunction - Short DI10-39
P0117 Coolant Temperature Sensor Malfunction - Open DI10-40
P0115 Supply Voltage Fault to Coolant Temperature Sensor DI10-40
P0685 Main Relay Malfunction DI10-40
P1405 EGR Solenoid Valve Short Malfunction - Short .. DI10-40
P1406 EGR Solenoid Valve Malfunction - Short DI10-40
P1480 Condenser Fan #1 Circuit Malfunction - Open . DI10-41
P1481 Condenser Fan #1 Circuit Malfunction - Short . DI10-41
P1482 Condenser Fan #1 Circuit Malfunction - Short to Ground DI10-41
P1526 Condenser Fan #2 Circuit Malfunction - Open . DI10-41
P1527 Condenser Fan #2 Circuit Malfunction - Short . DI10-41
P1528 Condenser Fan #2 Circuit Malfunction - Short to Ground DI10-41
P0325 Accelerometer #1 (Knock Sensor) Malfunction DI10-42
P0330 Accelerometer #2 (Knock Sensor) Malfunction DI10-42
P1611 Injector Bank #1 Malfunction - Low Voltage ... DI10-42
P1612 Injector Bank #1 Malfunction - High Voltage ... DI10-43
P1618 Injector Bank #2 Malfunction - Low Voltage ... DI10-43
P1619 Injector Bank #2 Malfunction - High Voltage .. DI10-43
P0263 Injector #1 Balancing Fault DI10-44
P0266 Injector #2 Balancing Fault DI10-44
P0272 Injector #4 Balancing Fault DI10-44
P0275 Injector #5 Balancing Fault DI10-44
P0269 Injector #3 Balancing Fault DI10-44
P0201 Injector #1 Circuit Open DI10-44
P0202 Injector #2 Circuit Open DI10-44
P0204 Injector #4 Circuit Open DI10-45
P0205 Injector #5 Circuit Open DI10-45

امداد خودرو فارما
تلفن شبانه روزی: ۰۲۱-۸۸۸۶۲۰۸۵
FarmaSOS.com

P0203 Injector #3 Circuit Open DI10-45
P1201 Injector #1 Circuit Short DI10-45
P1202 Injector #2 Circuit Short DI10-45
P1204 Injector #4 Circuit Short DI10-45
P1205 Injector #5 Circuit Short DI10-45
P1203 Injector #3 Circuit Short DI10-46
P0182 Fuel temperature sensor - Short to Ground ... DI10-46
P0183 Fuel temperature sensor - Short to B+ DI10-46
P0180 Fuel temperature sensor - Malfunction DI10-47
P1678 Glow Plug Malfunction - Open DI10-47
P1679 Glow Plug Malfunction - Short DI10-47
P1680 Glow Plug Malfunction - Short to Ground DI10-47
P1530 #1 Heater operating circuit - Open DI10-47
P1531 #1 Heater operating circuit - Short DI10-48
P1532 #1 Heater operating circuit - Short to Ground . DI10-48
P1534 #2 Heater operating circuit - Open DI10-48
P1535 #2 Heater operating circuit - Short DI10-48
P1536 #2 Heater operating circuit - Short to Ground DI10-48
P1254 Maximum Rail Pressure Control Malfunction (IMV Fault) DI10-49
P1253 Minimum Rail Pressure Control Malfunction (IMV Fault) DI10-49
P1256 Too Small Transfer Pressure Fuel in Rail Pressure System DI10-50
P1257 Too Large Transfer Pressure Fuel in Rail Pressure System DI10-50
P1258 Too Small High Pressure Fuel in Rail Pressure System DI10-51
P1259 Too Large High Pressure Fuel in Rail Pressure System DI10-51
P1191 Pressure Build Up - Too Slow DI10-52
P0255 IMV Driver Circuit Malfunction - Open DI10-52
P0251 IMV Driver Circuit Malfunction - Short DI10-52
P0253 IMV Driver Circuit Malfunction - Short to Ground DI10-52
P0113 Intake Air Temperature Circuit Malfunction - Short DI10-53
P0112 Intake Air Temperature Circuit Malfunction - Open DI10-54
P0110 Intake Air Temperature Circuit Malfunction - Source Power Problem DI10-55
P1171 #1 Injector MDP Malfunction DI10-55
P1172 #2 Injector MDP Malfunction DI10-55
P1174 #4 Injector MDP Malfunction DI10-55
P1175 #5 Injector MDP Malfunction DI10-55
P1173 #3 Injector MDP Malfunction DI10-55
P1252 Too High IMV Pressure DI10-56
P1120 Accelerator Pedal Sensor #1 Malfunction DI10-56
P1121 Accelerator Pedal Sensor #2 Malfunction DI10-56
P1122 Accelerator Pedal Sensor Malfunction (Limp Home Mode) DI10-56
P1123 Accelerator Pedal Sensor Malfunction (Torque Mode) DI10-57
P1124 Accelerator Pedal Sensor Malfunction - Stuck .. DI10-57
P0122 Accelerator Pedal Sensor #1 Malfunction - Open DI10-57
P0123 Accelerator Pedal Sensor #1 Malfunction - Short DI10-57
P0120 Accelerator Pedal Sensor #1 Malfunction - Supply Voltage Fault DI10-57
P0222 Accelerator Pedal Sensor #2 Malfunction - Open DI10-58
P0223 Accelerator Pedal Sensor #2 Malfunction - Short DI10-58
P0220 Accelerator Pedal Sensor #2 Malfunction - Supply Voltage Fault DI10-58
P0192 Fuel Rail Pressure Sensor Malfunction - Open .. DI10-58
P0193 Fuel Rail Pressure Sensor Malfunction - Short .. DI10-59
P0190 Supply Voltage Fault to Fuel Rail Pressure Sensor DI10-59
P0191 Fuel Rail Pressure Sensor Signal Fault DI10-59
P1192 Fuel Rail Pressure Sensor Initial Signal Fault - Low DI10-60
P1193 Fuel Rail Pressure Sensor Initial Signal Fault - High DI10-60
P1190 Fuel Rail Pressure Sensor Initial Signal Fault .. DI10-60
P0215 Main Relay Fault - Stuck DI10-61
P1500 Vehicle Speed Fault DI10-61
P0642 ECU Supply Voltage 1 Fault - Low (5 V) DI10-61

ایران خودرو فارما
FarmaSOS.com

P0643 ECU Supply Voltage 1 Fault - High (5 V) DI10-61
P0641 ECU Supply Voltage 1 Fault (5 V) DI10-61
P0652 ECU Supply Voltage 2 Fault - Low (5 V) DI10-62
P0653 ECU Supply Voltage 2 Fault - High (5 V) DI10-62
P0651 ECU Supply Voltage 2 Fault (5 V) DI10-62
P0698 ECU Supply Voltage Fault - Low (2.5 V) DI10-62
P0699 ECU Supply Voltage Fault - High (2.5 V) DI10-62
P0697 ECU Supply Voltage Fault (2.5 V) DI10-63
P0245 Turbo Charger Actuator Circuit Fault - Short .. DI10-63
P0246 Turbo Charger Actuator Circuit Fault - Short to B+ DI10-63
P0606 ECU Watchdog Fault DI10-63
P1607 ECU Injector Cut Fault DI10-63
P1600 ECU Shut Down Fault DI10-63
P1601 ECU Fault DI10-63
P1602 ECU Fault DI10-63
P1614 ECU C2I/MDP Fault DI10-64
P1615 ECU Fault DI10-64
P1616 ECU Fault DI10-64
P1606 ECU Fault DI10-64
P1620 ECU Fault DI10-64
P1621 ECU Fault DI10-64
P1622 ECU Fault DI10-64
P1603 ECU Fault DI10-64
P1604 ECU Fault DI10-64
P1605 ECU Fault DI10-64
P1148 Accelerometer (Knock Sensor) Learning Fault . DI10-64
P0400 EGR Control Valve Fault DI10-65
P1235 VGT Operation Fault DI10-65
P1608 ECU Fault DI10-65
P0335 No Crank Signals DI10-65
P1170 Torque Trim Fault - High DI10-65
P1676 Glow Plug Communication Fault DI10-65
P1677 Glow Plug Controller Fault DI10-65
P0671 #1 Glow Plug Fault - Open DI10-66
P0672 #2 Glow Plug Fault - Open DI10-66
P0673 #3 Glow Plug Fault - Open DI10-66
P0674 #4 Glow Plug Fault - Open DI10-66
P0675 #5 Glow Plug Fault - Open DI10-66
P1671 #1 Glow Plug Fault - Short (+B) DI10-66
P1672 #2 Glow Plug Fault - Short (B+) DI10-67
P1673 #3 Glow Plug Fault - Short (B+) DI10-67
P1674 #4 Glow Plug Fault - Short (B+) DI10-67
P1675 #5 Glow Plug Fault - Short (B+) DI10-67
P0700 TCU Signal Fault DI10-67
P1540 Air Conditioner Operating Circuit Fault - Open . DI10-67
P1541 Air Conditioner Operating Circuit Fault - Short . DI10-67
P1542 Air Conditioner Operating Circuit Fault - Short to Ground DI10-67
P1149 Too High Water Level in Fuel Filter DI10-68
P1634 Immobilizer Fault (refer to immobilizer section) .. DI10-68
P1635 No response from Immobilizer (refer to immobilizer section) DI10-68
P1630 Wrong response from Immobilizer (refer to immobilizer section) DI10-68
P1631 Immobilizer Fault (refer to immobilizer section) . DI10-68
P1632 Immobilizer Fault (refer to immobilizer section) . DI10-68
P1633 Immobilizer Fault (refer to immobilizer section) . DI10-69
P0633 Immobilizer Fault (refer to immobilizer section) . DI10-69
P1636 Immobilizer Fault (refer to immobilizer section) . DI10-69

امداد خودرو فارما
تلفن شبانه روزی: ۰۸۵ ۰۲۱-۸۸۴۶۲
FarmaSOS.com

TROUBLE DIAGNOSIS TABLE

DTC	Trouble	Help	Torque Reduction (max.50%)	Torque Reduction (max.20%)	Delayed Engine Stop	Immediately Engine Stop	Limp Home Mode
P0102	Low HFM Sensor Signal (Circuit Open)	- HFM sensing values are lower than minimum sensing values. - Check the resistance in HFM sensor. - Check the ECU wiring harness (open and poor contact). • Check the ECU pin #82 and #84 for open circuit. - Actual air mass flow vs. Output voltages. • -20 Kg/h: 0.47 V • 0 Kg/h: 0.99 V • 10 Kg/h: 1.2226 ~ 1.2398 V • 15 Kg/h: 1.3552 ~ 1.3778 V • 30 Kg/h: 1.6783 ~ 1.7146 V • 60 Kg/h: 2.1619 ~ 2.2057 V • 120 Kg/h: 2.7215 ~ 2.7762 V • 250 Kg/h: 3.4388 ~ 3.5037 V • 370 Kg/h: 3.8796 ~ 3.9511 V • 480 Kg/h: 4.1945 ~ 4.2683 V • 640 Kg/h: 4.5667 ~ 4.6469 V - Replace the ECU if required.					
P0103	High HFM Sensor Signal (Circuit Short)	- HFM sensing values are higher than maximum sensing values. - Check the resistance in HFM sensor. - Check the ECU wiring harness (open and poor contact). • Check the ECU pin #82 and #84 for open circuit. - Actual air mass flow vs. Output voltages. • -20 Kg/h: 0.47 V • 0 Kg/h: 0.99 V • 10 Kg/h: 1.2226 ~ 1.2398 V • 15 Kg/h: 1.3552 ~ 1.3778 V • 30 Kg/h: 1.6783 ~ 1.7146 V • 60 Kg/h: 2.1619 ~ 2.2057 V • 120 Kg/h: 2.7215 ~ 2.7762 V • 250 Kg/h: 3.4388 ~ 3.5037 V • 370 Kg/h: 3.8796 ~ 3.9511 V • 480 Kg/h: 4.1945 ~ 4.2683 V • 640 Kg/h: 4.5667 ~ 4.6469 V - Replace the ECU if required.					

امداد خودرو فارما
تلفن شبانه روزی: ۰۲۱-۸۸۸۶۲۰۸۵
FarmaSOS.com

CHANGED BY	
EFFECTIVE DATE	
AFFECTED VIN	

DTC	Trouble	Help	Torque Reduction (max.50%)	Torque Reduction (max.20%)	Delayed Engine Stop	Immediately Engine Stop	Limp Home Mode
P0100	Air Mass Flow (HFM) Malfunction	- The external power supply is faulty. • Check the external power supply. • Check the sensor wiring harness (open, short, poor contact). - Actual air mass flow vs. Output voltages. • -20 Kg/h: 0.47 V • 0 Kg/h: 0.99 V • 10 Kg/h: 1.2226 ~ 1.2398 V • 15 Kg/h: 1.3552 ~ 1.3778 V • 30 Kg/h: 1.6783 ~ 1.7146 V • 60 Kg/h: 2.1619 ~ 2.2057 V • 120 Kg/h: 2.7215 ~ 2.7762 V • 250 Kg/h: 3.4388 ~ 3.5037 V • 370 Kg/h: 3.8796 ~ 3.9511 V • 480 Kg/h: 4.1945 ~ 4.2683 V • 640 Kg/h: 4.5667 ~ 4.6469 V - Replace the ECU if required.					
P0344	Cam Position Sensor Malfunction	- No cam recognition signal (missing events). - Check the source voltage of cam position sensor (ECU pin #111) (specified value: 4.5 ~ 12 V). - Check the sensor wiring harness for ECU pin #103 and #104 (open, short, poor contact). - Check the cam position sensor. - Measure the air gap: 0.2 ~ 1.8 mm - Replace the ECU if required.					
P0341	Cam Position Sensor Malfunction (Poor Synchronization)	- Not synchronized with Crank angle signal. - Check the source voltage of cam position sensor (specified value: 4.5 ~ 12 V). - Check the sensor wiring harness for ECU pin #103 and #104 (open, short, poor contact). - Check the cam position sensor. - Measure the air gap: 0.2 ~ 1.8 mm - Replace the ECU if required.					
P0219	Too Small Clearance of Crank Angle Sensor	- Crank angle signal faults or clearance too close. - Check the sensor wiring harness for ECU pin #90 and #82 (open, short, poor contact). - Check the resistance of crank angle sensor: 1090 Ω ± 15 %. - Measure the air gap: 0.3 ~ 1.3 mm • 1.3 mm of air gap: outputs 1.0 V at 40 rpm • 0.3 mm of air gap: outputs 150 V at 7000 rpm - Check the teeth condition. • Drive plate (A/T), DMF (M/T) - Replace the ECU if required.					

امداد خودرو
تلفن شبانه روزی: ۰۲۱-۸۸۳۶۰۸۵
FarmeSOS.com

DTC	Trouble	Help	Torque Reduction (max.50%)	Torque Reduction (max.20%)	Delayed Engine Stop	Immediately Engine Stop	Limp Home Mode
P0336	Too Large Clearance of Crank Angle Sensor	- Air gap of crank angle sensor is abnormal. - Check the sensor wiring harness for ECU pin #90 and #82 (open, short, poor contact). - Check the resistance of crank angle sensor: 1090 Ω ± 15 %. - Measure the air gap: 0.3 ~ 1.3 mm • 1.3 mm of air gap: outputs 1.0 V at 40 rpm • 0.3 mm of air gap: outputs 150 V at 7000 rpm - Check the teeth condition. • Drive plate (A/T), DMF (M/T) - Replace the ECU if required.					
P0372	Crank Angle Sensor Malfunction	- Even though cam position recognition is normal, no crank angle signal recognition (missing tooth). - Check the sensor wiring harness for ECU pin #90 and #82 (open, short, poor contact). - Check the resistance of crank angle sensor: 1090 Ω ± 15 %. - Measure the air gap: 0.3 ~ 1.3 mm • 1.3 mm of air gap: outputs 1.0 V at 40 rpm • 0.3 mm of air gap: outputs 150 V at 7000 rpm - Check the teeth condition. • Drive plate (A/T), DMF (M/T) - Replace the ECU if required.					
P1107	Barometric Sensor Circuit Short/GND Short	- Out of range about barometric sensor (short to ground). - Actual barometric pressure vs. Output voltages. • 15 Kpa: 0 V 35 Kpa: 1.0 V • 55 Kpa: 2.0 V 80 Kpa: 3.0 V • 100 Kpa: 4.0 V 110 Kpa: 4.5 V - Replace the ECU.					
P1108	Barometric Sensor Circuit Short	- Out of range about barometric sensor (short to B+). - Actual barometric pressure vs. Output voltages. • 15 Kpa: 0 V 35 Kpa: 1.0 V • 55 Kpa: 2.0 V 80 Kpa: 3.0 V • 100 Kpa: 4.0 V 110 Kpa: 4.5 V - Replace the ECU.					
P1105	Barometric Sensor Circuit Short	- Out of range about barometric sensor (over voltage). - Actual barometric pressure vs. Output voltages. • 15 Kpa: 0 V 35 Kpa: 1.0 V • 55 Kpa: 2.0 V 80 Kpa: 3.0 V • 100 Kpa: 4.0 V 110 Kpa: 4.5 V - Replace the ECU.					

امداد خودرو فارما
تلفن شبانه روزی: ۰۲۱-۸۸۸۶۲۸۵
FarmaSOS.com

CHANGED BY	
EFFECTIVE DATE	
AFFECTED VIN	

DTC	Trouble	Help	Torque Reduction (max.50%)	Torque Reduction (max.20%)	Delayed Engine Stop	Immediately Engine Stop	Limp Home Mode
P0562	Low Battery Voltage	- Malfunction in recognition of system source voltage (Lower than threshold). • Less than minimum 8 Volts in 2000 rpm below • Less than 10 Volts in 2000 rpm above. - Check the battery wiring harness for ECU pin #3, #4 and #5 (open, short, poor contact). - Check the battery main relay and fuse. - Check the body ground. - Measure the resistance between body ground and ECU ground. • Repair the ECU ground if the resistance is high. - Replace the ECU if required.	O				
P0563	High Battery Voltage	- Malfunction in recognition of system source voltage (Higher than threshold). • More than minimum 16 Volts in 2000 rpm below - Check the battery wiring harness for ECU pin #3, #4 and #5 (open, short, poor contact). - Check the alternator. - Check the body ground. - Measure the resistance between body ground and ECU ground. • Repair the ECU ground if the resistance is high. - Replace the ECU if required.	O				
P0560	Battery Voltage Malfunction	- Malfunction in recognition of system source voltage (A/D converter faults). • Less than minimum 8 Volts in 2000 rpm below • Less than 10 Volts in 2000 rpm above. - Check the battery wiring harness for ECU pin #3, #4 and #5 (open, short, poor contact). - Check the battery main relay and fuse. - Check the body ground. - Measure the resistance between body ground and ECU ground. • Repair the ECU ground if the resistance is high. - Replace the ECU if required.	O				

امداد خودرو فارما
تلفن شبانه روزی: ۰۲۱-۸۸۸۶۲۰۸۵
FarmaSOS.com

DTC	Trouble	Help	Torque Reduction (max.50%)	Torque Reduction (max.20%)	Delayed Engine Stop	Immediately Engine Stop	Limp Home Mode
P0109	Low Booster Pressure Sensor Signal	- Out of signal range about boost pressure sensor at Ignition key-On and Engine Stop (Lower than specified values). - Check the supply voltage to sensor. - Actual boost pressure vs. Output voltages. • Raw Signal Range: 0.545 ~ 2.490 bar • 0.4 bar: 0.6120 V • 1.4 bar: 2.6520 V • 2.4 bar: 4.6920 V - Check the sensor wiring harness for ECU pin #99 and #100 (open, poor contact). - Visually check sensor and replace if required. - Replace the ECU if required. - Check whether existing or not about turbo boosting control malfunction (P1235) simultaneously. - If there is turbo boost control fault, Should be checked followings also; • Leakage before turbo system • Vacuum pump malfunction • Waste gate' solenoid valve • Turbo charger system defect or malfunction itself • Air inlet restriction • Exhaust system restriction					
P0106	High Booster Pressure Sensor Signal	- Out of signal range about boost pressure sensor at Ignition key-On and Engine Stop (Higher than specified values). - Check the supply voltage to sensor. - Actual boost pressure vs. Output voltages. • Raw Signal Range: 0.545 ~ 2.490 bar • 0.4 bar: 0.6120 V • 1.4 bar: 2.6520 V • 2.4 bar: 4.6920 V - Check the sensor wiring harness for ECU pin #99 and #100 (open, poor contact). - Visually check sensor and replace if required. - Replace the ECU if required. - Check whether existing or not about turbo boosting control malfunction (P1235) simultaneously. - If there is turbo boost control fault, Should be checked followings also; • Leakage before turbo system • Vacuum pump malfunction • Waste gate' solenoid valve • Turbo charger system defect or malfunction itself • Air inlet restriction • Exhaust system restriction					

امداد خودرو فارما
تلفن شبانه روزی ۰۲۱-۷۷۵۳۵۵۵۵
FarmaSOS.com

CHANGED BY	
EFFECTIVE DATE	
AFFECTED VIN	

DTC	Trouble	Help	Torque Reduction (max.50%)	Torque Reduction (max.20%)	Delayed Engine Stop	Immediately Engine Stop	Limp Home Mode
P0107	Booster Pressure Sensor Open/GND Short	- Out of signal range about boost pressure sensor at Engine running condition (Lower than specified values). - Check the supply voltage to sensor. - Actual boost pressure vs. Output voltages • Raw Signal Range: 0.545 ~ 2.490 bar • 0.4 bar: 0.6120 V • 1.4 bar: 2.6520 V • 2.4 bar: 4.6920 V - Check the sensor wiring harness for ECU pin #99 and #100 (open, poor contact). - Visually check sensor and replace if required. - Replace the ECU if required. - Check whether existing or not about turbo boosting control malfunction (P1235) simultaneously. - If there is turbo boost control fault, Should be checked followings also; • Leakage before turbo system • Vacuum pump malfunction • Waste gate' solenoid valve • Turbo charger system defect or malfunction itself • Air inlet restriction • Exhaust system restriction					
P0108	Booster Pressure Sensor Short	- Out of signal range about boost pressure sensor at Engine running condition (Higher than specified values). - Check the supply voltage to sensor. - Actual boost pressure vs. Output voltages • Raw Signal Range: 0.545~2.490 bar • 0.4 bar: 0.6120 V • 1.4 bar: 2.6520 V • 2.4 bar: 4.6920 V - Check the sensor wiring harness for ECU pin #99 and #100 (open, poor contact). - Visually check sensor and replace if required. - Replace the ECU if required. - Check whether existing or not about turbo boosting control malfunction (P1235) simultaneously. - If there is turbo boost control fault, Should be checked followings also; • Leakage before turbo system • Vacuum pump malfunction • Waste gate' solenoid valve • Turbo charger system defect or malfunction itself • Air inlet restriction • Exhaust system restriction					

امداد خودرو ما
تلفن شبانه روزی: ۰۹۱۰۸۸۸۶۲۰۱
FarmaSOS.com

DTC	Trouble	Help	Torque Reduction (max.50%)	Torque Reduction (max.20%)	Delayed Engine Stop	Immediately Engine Stop	Limp Home Mode
P0105	Supply Voltage Fault to Booster Pressure Sensor	- Out of range of supply voltages about boost pressure sensor at Ignition key-On and Engine Stop (Higher than specified values). - Check the supply voltage to sensor. - Actual boost pressure vs. Output voltages • Raw Signal Range: 0.545 ~ 2.490 bar • 0.4 bar: 0.6120 V • 1.4 bar: 2.6520 V • 2.4 bar: 4.6920 V - Check the sensor wiring harness for ECU pin #100 and #108 (open, poor contact). - Visually check sensor and replace if required. - Replace the ECU if required. - Check whether existing or not about turbo boosting control malfunction (P1235) simultaneously. - If there is turbo boost control fault, Should be checked followings also; • Leakage before turbo system • Vacuum pump malfunction • Waste gate' solenoid valve • Turbo charger system defect or malfunction itself • Air inlet restriction • Exhaust system restriction					
P1106	Booster Pressure Sensor Malfunction	- Out of range of supply voltages about boost pressure sensor at Ignition key-On and Engine Stop (Higher than specified values). - Check the supply voltage to sensor. - Actual boost pressure vs. Output voltages. • Raw Signal Range: 0.545 ~ 2.490 bar • 0.4 bar: 0.6120 V • 1.4 bar: 2.6520 V • 2.4 bar: 4.6920 V - Check the sensor wiring harness for ECU pin #99 and #100 (open, poor contact). - Visually check sensor and replace if required. - Replace the ECU if required. - Check whether existing or not about turbo boosting control malfunction (P1235) simultaneously. - If there is turbo boost control fault, Should be checked followings also; • Leakage before turbo system • Vacuum pump malfunction • Waste gate' solenoid valve • Turbo charger system defect or malfunction itself • Air inlet restriction • Exhaust system restriction					

امداد خودرو ایران
تلفن شبانه روزی ۰۲۱-۶۶۴۶۶۶۶۶
FarmaSoc.com

CHANGED BY	
EFFECTIVE DATE	
AFFECTED VIN	

DTC	Trouble	Help	Torque Reduction (max.50%)	Torque Reduction (max.20%)	Delayed Engine Stop	Immediately Engine Stop	Limp Home Mode
P1109	Booster Pressure Sensor Initial Check Fault	- Implausible signal values or range about boost pressure sensor at Engine running condition (Higher than specified values). - Check the supply voltage to sensor. - Actual boost pressure vs. Output voltages • Raw Signal Range: 0.545 ~ 2.490 bar • 0.4 bar: 0.6120 V • 1.4 bar: 2.6520 V • 2.4 bar: 4.6920 V - Check the sensor wiring harness for ECU pin #99 and #100 (open, poor contact). - Visually check sensor and replace if required. - Replace the ECU if required. - Check whether existing or not about turbo boosting control malfunction (P1235) simultaneously. - If there is turbo boost control fault, Should be checked followings also; • Leakage before turbo system • Vacuum pump malfunction • Waste gate' solenoid valve • Turbo charger system defect or malfunction itself • Air inlet restriction • Exhaust system restriction					
P0571	Brake Pedal Switch Fault	- The brake pedal switch or light switch is faulty. • Brake pedal switch: Normal Close (NC) • Light switch: Normal Open (NO) • When operating the brake switch, one signal (NO) is sent to auto cruise and the other (NC) is sent to brake lamp. - Check the brake and light switch wiring harness. - Check the supply voltage to brake and light switch (12 V). - Check the brake and light switch for contact. - Check the ECU wiring harness for ECU pin #77 and #58 (short, poor contact). - Replace the ECU if required.					

امداد خودرو فارما
تلفن شبانه روزی: ۰۸۵-۳۲۸۸۲۱۰۲
FarmaSOS.com

DTC	Trouble	Help	Torque Reduction (max.50%)	Torque Reduction (max.20%)	Delayed Engine Stop	Immediately Engine Stop	Limp Home Mode
P1572	Brake Lamp Signal Fault	- The brake pedal switch or light switch is faulty. • Brake pedal switch: Normal Close (NC) • Light switch: Normal Open (NO) • When operating the brake pedal switch, one signal (NO) is sent to auto cruise and the other (NC) is sent to brake lamp. - Check the brake pedal and light switch wiring harness. - Check the supply voltage to brake pedal and light switch (12 V). - Check the brake pedal and light switch for contact. - Check the ECU wiring harness for ECU pin #58 (open, short, poor contact). - Replace the ECU if required.					
P1571	Brake Lamp Signal Fault	- The brake pedal switch is faulty. • Brake pedal switch: Normal Close (NC) • Light switch: Normal Open (NO) • When operating the brake pedal switch, one signal (NO) is sent to auto cruise and the other (NC) is sent to brake lamp. - Check the brake pedal switch wiring harness. - Check the supply voltage to brake pedal switch (12 V). - Check the brake pedal switch for contact. - Check the ECU wiring harness for ECU pin #77 (open, short, poor contact). - Replace the ECU if required.					
P1286	Low Resistance for Injector #1 wiring harness	- Out of range about wiring harness resistance for Injector #1. • Low: Less than 0.150 Ω (injector circuit open) - Check the injector #1 wiring harness and electric isolation. - Check the injector #1 wiring harness for open circuit. • If the pin in injector #1 is defective, replace injector #1 and perform C2I coding, then check again. • If the pin in injector #1 is not defective, check the ECU wiring harness. - Replace the ECU if required.					

امداد خودرو ۰۲۱-۸۸۸۶۲۰۸۵ تلفن شبانه روزی
FarmanOS.com

CHANGED BY	
EFFECTIVE DATE	
AFFECTED VIN	

DTC	Trouble	Help	Torque Reduction (max.50%)	Torque Reduction (max.20%)	Delayed Engine Stop	Immediately Engine Stop	Limp Home Mode
P1287	High Resistance for Injector #1 wiring harness	- Out of range about wiring harness resistance for Injector #1. • High: More than 0.573 Ω (injector circuit short) - Check the injector #1 wiring harness and electric isolation. - Check the injector #1 wiring harness for short circuit. • If the trouble still exists after removing the injector connector, replace injector #1 and perform C2I coding, then check again. • If the trouble is fixed after removing the injector connector, check the wiring harness between ECU and injector. - Replace the ECU if required.					
P1288	Low Resistance for Injector #2 wiring harness	- Out of range about wiring harness resistance for Injector #2. • Low: Less than 0.150 Ω (injector circuit open) - Check the injector #2 wiring harness and electric isolation. - Check the injector #2 wiring harness for open circuit. • If the pin in injector #2 is defective, replace injector #2 and perform C2I coding, then check again. • If the pin in injector #2 is not defective, check the ECU wiring harness. - Replace the ECU if required.					
P1289	High Resistance for Injector #2 wiring harness	- Out of range about wiring harness resistance for Injector #2. • High: More than 0.573 Ω (injector circuit short) - Check the injector #2 wiring harness and electric isolation. - Check the injector #2 wiring harness for short circuit. • If the trouble still exists after removing the injector connector, replace injector #2 and perform C2I coding, then check again. • If the trouble is fixed after removing the injector connector, check the wiring harness between ECU and injector. - Replace the ECU if required.					

امداد خودرو ما
تلفن شبانه روزی: ۰۲۱-۸۸۶۲۰۸۵
FarmaSOS.com

DTC	Trouble	Help	Torque Reduction (max.50%)	Torque Reduction (max.20%)	Delayed Engine Stop	Immediately Engine Stop	Limp Home Mode
P1292	Low Resistance for Injector #4 wiring harness	- Out of range about wiring harness resistance for Injector #4. • Low: Less than 0.150 Ω (injector circuit open) - Check the injector #4 wiring harness and electric isolation. - Check the injector #4 wiring harness for open circuit. • If the pin in injector #4 is defective, replace injector #4 and perform C2I coding, then check again. • If the pin in injector #4 is not defective, check the ECU wiring harness. - Replace the ECU if required.					
P1293	High Resistance for Injector #4 wiring harness	- Out of range about wiring harness resistance for Injector #4. • High: More than 0.573 Ω (injector circuit short) - Check the injector #4 wiring harness and electric isolation. - Check the injector #4 wiring harness for short circuit. • If the trouble still exists after removing the injector connector, replace injector #4 and perform C2I coding, then check again. • If the trouble is fixed after removing the injector connector, check the wiring harness between ECU and injector. - Replace the ECU if required.					
P1294	Low Resistance for Injector #5 wiring harness	- Out of range about wiring harness resistance for Injector #5. • Low: Less than 0.150 Ω (injector circuit open) - Check the injector #5 wiring harness and electric isolation. - Check the injector #5 wiring harness for open circuit. • If the pin in injector #5 is defective, replace injector #5 and perform C2I coding, then check again. • If the pin in injector #5 is not defective, check the ECU wiring harness. - Replace the ECU if required.					

امداد خودرو فارما
تلفن شبانه روزی: ۰۲۱۶۶۸۶۲۰۸۵
FarmaSOS.com

CHANGED BY	
EFFECTIVE DATE	
AFFECTED VIN	

DTC	Trouble	Help	Torque Reduction (max.50%)	Torque Reduction (max.20%)	Delayed Engine Stop	Immediately Engine Stop	Limp Home Mode
P1295	High Resistance for Injector #5 wiring harness	- Out of range about wiring harness resistance for Injector #5. • High: More than 0.573 Ω (injector circuit short) - Check the injector #5 wiring harness and electric isolation. - Check the injector #5 wiring harness for short circuit. • If the trouble still exists after removing the injector connector, replace injector #5 and perform C2I coding, then check again. • If the trouble is fixed after removing the injector connector, check the wiring harness between ECU and injector. - Replace the ECU if required.					
P1290	Low Resistance for Injector #3 wiring harness	- Out of range about wiring harness resistance for Injector #3. • Low: Less than 0.150 Ω (injector circuit open) - Check the injector #3 wiring harness and electric isolation. - Check the injector #3 wiring harness for open circuit. • If the pin in injector #3 is defective, replace injector #3 and perform C2I coding, then check again. • If the pin in injector #3 is not defective, check the ECU wiring harness. - Replace the ECU if required.					
P1291	High Resistance for Injector #3 wiring harness	- Out of range about wiring harness resistance for Injector #3. • High: More than 0.573 Ω (injector circuit short) - Check the injector #3 wiring harness and electric isolation. - Check the injector #3 wiring harness for short circuit. • If the trouble still exists after removing the injector connector, replace injector #3 and perform C2I coding, then check again. • If the trouble is fixed after removing the injector connector, check the wiring harness between ECU and injector. - Replace the ECU if required.					
P0704	Clutch switch malfunction	- The clutch switch is faulty (Manual Transmission Only). - Check the switch wiring harness. • Check the ECU pin #38 for open, short and poor contact. - Check the switch supply voltage and operations. - Replace the ECU if required.					

امداد خودرو ما
تلفن شبانه روزی: ۰۲۱-۸۸۶۲۰۸۵
FarmaSOS.com

DTC	Trouble	Help	Torque Reduction (max.50%)	Torque Reduction (max.20%)	Delayed Engine Stop	Immediately Engine Stop	Limp Home Mode
P1115	Coolant Temperature Sensor Malfunction	- Implausible values of coolant temperature (If the temperature is below the limits values after warm up). - If Fuel temperature is invalid, the previous coolant temperature is retained. - Check the supply voltage to sensor. - Actual air temp. vs. Resistance • 20°C: 2449 Ω • 50°C: 826.3 Ω • 80°C: 321.4 Ω • 100°C: 112.9 Ω - Check the wiring harness (open, short and poor contact). • ECU pin #101 and #102 - Visually check the sensor and replace if required. - Check the thermostat, water pump radiator related coolant route (thermostat stuck). - Replace the ECU if required.					
P0118	Coolant Temperature Sensor Malfunction - Short	- Malfunction in recognition of coolant temperature • More than maximum values (Circuit Short) • External power supply malfunction - If Fuel temperature is invalid, the previous coolant temperature is retained. - Check the supply voltage to sensor. - Actual air temp. vs. Resistance • 20°C: 2449 Ω • 50°C: 826.3 Ω • 80°C: 321.4 Ω • 100°C: 112.9 Ω - Check the wiring harness (short and poor contact). • ECU pin #101 and #102 - Visually check the sensor and replace if required. - Replace the ECU if required.					

امداد خودرو فارما
تلفن شبانه روزی: ۰۲۱-۸۸۶۲۰۸۵۵
FarmaSOS.com

CHANGED BY	
EFFECTIVE DATE	
AFFECTED VIN	

DTC	Trouble	Help	Torque Reduction (max.50%)	Torque Reduction (max.20%)	Delayed Engine Stop	Immediately Engine Stop	Limp Home Mode
P0117	Coolant Temperature Sensor Malfunction - Open	- Malfunction in recognition of coolant temperature • Less than minimum values (Circuit Open) • External power supply malfunction - If Fuel temperature is invalid, the previous coolant temperature is retained. - Check the supply voltage to sensor. - Actual air temp. vs. Resistance • 20°C: 2449 Ω • 50°C: 826.3 Ω • 80°C: 321.4 Ω • 100°C: 112.9 Ω - Check the wiring harness (open and poor contact). • ECU pin #101 and #102 - Visually check the sensor and replace if required. - Replace the ECU if required.					
P0115	Supply Voltage Fault to Coolant Temperature Sensor	- Check if the supply voltage of approx. 12 V is applied.					
P0685	Main Relay Malfunction	- The the main relay is unexpectedly high/low state (ECU is supplied after 3 seconds). - Relay resistance: 92 ± 9 Ω (at 20°C) - Check the relay wiring harness (open, short and poor contact). • Check for open and short: ECU pin #9. - If the forced operation is not available, replace the ECU.					
P1405	EGR Solenoid Valve Malfunction - Short to ground	- Out of range about EGR gas: High. • EGR controller circuit: Open or short to ground - Check the EGR actuator wiring harness. - Check the supply voltage to EGR solenoid valve. - Check the EGR solenoid valve. - Check the EGR valve for stick. - Check the resistance of EGR actuator: 15.4 Ω. - Check the ECU wiring harness for open and short. • ECU pin #96					
P1406	EGR Solenoid Valve Malfunction - Short to +Batt	- Out of range about EGR gas: Low. • EGR controller circuit: Short to battery - Check the EGR actuator wiring harness. - Check the supply voltage to EGR solenoid valve. - Check the EGR solenoid valve. - Check the EGR valve for stick. - Check the resistance of EGR actuator: 15.4 Ω - Check the ECU wiring harness for open and short. • ECU pin #96					

امداد خودرو فارما
تلفن شبانه روزی: ۰۲۱-۸۸۸۶۲۰۸۵
FarmaSOS.com

DTC	Trouble	Help	Torque Reduction (max.50%)	Torque Reduction (max.20%)	Delayed Engine Stop	Immediately Engine Stop	Limp Home Mode
P1480	Condenser Fan #1 Circuit Malfunction - Open	- Condenser fan #1: Open - Check the relay and relay wiring harness. - Check the ECU wiring harness for open and short. • ECU pin #80 - If the forced operation is not available after replacing the relay, replace the ECU.					
P1481	Condenser Fan #1 Circuit Malfunction - Short	- Condenser fan #1: Short - Check the relay and relay wiring harness. - Check the ECU wiring harness for open and short. • ECU pin #80 - If the forced operation is not available after replacing the relay, replace the ECU.					
P1482	Condenser Fan #1 Circuit Malfunction - Short to Ground	- Condenser fan #1: Short to ground. - Check the relay and relay wiring harness. - Check the ECU wiring harness for open and short. • ECU pin #80 - If the forced operation is not available after replacing the relay, replace the ECU.					
P1526	Condenser Fan #2 Circuit Malfunction - Open	- Condenser fan #2: Open - Check the relay and relay wiring harness. - Check the ECU wiring harness for open and short. • ECU pin #81 - If the forced operation is not available after replacing the relay, replace the ECU.					
P1527	Condenser Fan #2 Circuit Malfunction - Short	- Condenser fan #2: Short - Check the relay and relay wiring harness. - Check the ECU wiring harness for open and short. • ECU pin #81 - If the forced operation is not available after replacing the relay, replace the ECU.					
P1528	Condenser Fan #2 Circuit Malfunction - Short to Ground	- Condenser fan #2: Short to ground - Check the relay and relay wiring harness. - Check the ECU wiring harness for open and short. • ECU pin #81 - If the forced operation is not available after replacing the relay, replace the ECU.					

امداد خودرو پارسا
تلفن شبانه روزی: ۰۲۱-۸۸۶۲۰۸۵
FarsiaSOS.com

CHANGED BY	
EFFECTIVE DATE	
AFFECTED VIN	

DTC	Trouble	Help	Torque Reduction (max.50%)	Torque Reduction (max.20%)	Delayed Engine Stop	Immediately Engine Stop	Limp Home Mode
P0325	Accelerometer #1 (Knock Sensor) Malfunction	- The signal / noise ratio is too low about accelerometer # 1. - Check the accelerometer wiring harness and tightening torque. • Tightening torque: 20 ± 5 Nm - Check the ECU wiring harness for open and short. • ECU pin #45 and #46 - If the trouble still exists even after replacing the accelerometer, replace the ECU.					
P0330	Accelerometer #2 (Knock Sensor) Malfunction	- The signal / noise ratio is too low about accelerometer # 1. - Check the accelerometer wiring harness and tightening torque. • Tightening torque: 20 ± 5 Nm - Check the ECU wiring harness for open and short. • ECU pin #44 and #63 - If the trouble still exists even after replacing the accelerometer, replace the ECU.					
P1611	Injector Bank #1 Malfunction - Low Voltage	- Malfunction of injector (#1, #4, #3) circuit (Low): Short to Ground or to Battery. - Operating voltage: 6 ~ 18 V - Check the injector bank #1: Open and poor contact - Check if the trouble recurs with the injectors removed and the ignition key "OFF". • If recurred, check the injector and ECU wiring harness. - Check if the trouble recurs while installing the injectors one by one with the ignition key "ON". • If recurred, replace the injector (perform C2I coding after replacement). • Check the other injectors with same manner. - Check the ECU wiring harness. • ECU pin #44 and #63 - Replace the ECU if required.					

امداد خودرو فارما
تلفن شبانه روزی: ۰۲۱-۸۸۸۶۴۸۵
FarmaSOS.com

DTC	Trouble	Help	Torque Reduction (max.50%)	Torque Reduction (max.20%)	Delayed Engine Stop	Immediately Engine Stop	Limp Home Mode
P1612	Injector Bank #1 Malfunction - High Voltage	- Malfunction of injector (#1, #4, #3) circuit (High): Short to Ground or to Battery. - Operating voltage: 6 ~ 18 V - Check the injector bank #1: Short and poor contact - Check if the trouble recurs with the injectors removed and the ignition key “OFF”. • If recurred, check the injector and ECU wiring harness. - Check if the trouble recurs while installing the injectors one by one with the ignition key “ON”. • If recurred, replace the injector (perform C2I coding after replacement). • Check the other injectors with same manner. - Check the ECU wiring harness. • ECU pin #44 and #63 - Replace the ECU if required.					
P1618	Injector Bank #2 Malfunction - Low Voltage	- Malfunction of injector (#2, #5) circuit (Low): Short to Ground or to Battery. - Operating voltage: 6 ~ 18 V - Check the injector bank #2: Open and poor contact - Check if the trouble recurs with the injectors removed and the ignition key “OFF”. • If recurred, check the injector and ECU wiring harness. - Check if the trouble recurs while installing the injectors one by one with the ignition key “ON”. • If recurred, replace the injector (perform C2I coding after replacement). • Check the other injectors with same manner. - Check the ECU wiring harness. • ECU pin #44 and #63 - Replace the ECU if required.					
P1619	Injector Bank #2 Malfunction - High Voltage	- Malfunction of injector (#2, #5) circuit (High): Short to Ground or to Battery. - Operating voltage: 6 ~ 18 V - Check the injector bank #2: Short and poor contact - Check if the trouble recurs with the injectors removed and the ignition key “OFF”. • If recurred, check the injector and ECU wiring harness. - Check if the trouble recurs while installing the injectors one by one with the ignition key “ON”. • If recurred, replace the injector (perform C2I coding after replacement). • Check the other injectors with same manner. - Check the ECU wiring harness. • ECU pin #44 and #63 - Replace the ECU if required.					

امداد خودرو ما
تلفن شبانه روزی ۰۲۱۷۷۸۸۸
FarmaSOS.com

CHANGED BY	
EFFECTIVE DATE	
AFFECTED VIN	

DTC	Trouble	Help	Torque Reduction (max.50%)	Torque Reduction (max.20%)	Delayed Engine Stop	Immediately Engine Stop	Limp Home Mode
P0263	Injector #1 Balancing Fault	- Injector #1 cylinder balancing faults (Injector stuck closed). - Check the injector circuit for open. - Check the glow plug. - Check the inlet tube for clogging. - Check the EGR. - Replace the ECU if required (perform C2I coding after replacement).					
P0266	Injector #2 Balancing Fault	- Injector #2 cylinder balancing faults (Injector stuck closed). - Check the injector circuit for open. - Check the glow plug. - Check the inlet tube for clogging. - Check the EGR. - Replace the ECU if required (perform C2I coding after replacement).					
P0272	Injector #4 Balancing Fault	- Injector #4 cylinder balancing faults (Injector stuck closed). - Check the injector circuit for open. - Check the glow plug. - Check the inlet tube for clogging. - Check the EGR. - Replace the ECU if required (perform C2I coding after replacement).					
P0275	Injector #5 Balancing Fault	- Injector #5 cylinder balancing faults (Injector stuck closed). - Check the injector circuit for open. - Check the glow plug. - Check the inlet tube for clogging. - Check the EGR. - Replace the ECU if required (perform C2I coding after replacement).					
P0269	Injector #3 Balancing Fault	- Injector #3 cylinder balancing faults (Injector stuck closed). - Check the injector circuit for open. - Check the glow plug. - Check the inlet tube for clogging. - Check the EGR. - Replace the ECU if required (perform C2I coding after replacement).					
P0201	Injector #1 Circuit Open	- Injector #1 circuit malfunction: Open. • If the injector pin is defective, perform C2I coding and check again. • If the injector pin is normal, check the ECU wiring harness (ECU pin: #117, #114). - Replace the ECU if required.					
P0202	Injector #2 Circuit Open	- Injector #2 circuit malfunction: Open. • If the injector pin is defective, perform C2I coding and check again. • If the injector pin is normal, check the ECU wiring harness (ECU pin: #118, #121). - Replace the ECU if required.					

امداد خودرو فارس
تلفن شبانه روزی: ۰۵۱-۸۸۶۲۰۸۵
FarsiSOS.com

DTC	Trouble	Help	Torque Reduction (max.50%)	Torque Reduction (max.20%)	Delayed Engine Stop	Immediately Engine Stop	Limp Home Mode
P0204	Injector #4 Circuit Open	- Injector #4 circuit malfunction: Open. • If the injector pin is defective, perform C2I coding and check again. • If the injector pin is normal, check the ECU wiring harness (ECU pin: #117, #115). - Replace the ECU if required.					
P0205	Injector #5 Circuit Open	- Injector #5 circuit malfunction: Open. • If the injector pin is defective, perform C2I coding and check again. • If the injector pin is normal, check the ECU wiring harness (ECU pin: #118, #120). - Replace the ECU if required.					
P0203	Injector #3 Circuit Open	- Injector #3 circuit malfunction: Open. • If the injector pin is defective, perform C2I coding and check again. • If the injector pin is normal, check the ECU wiring harness (ECU pin: #117, #116). - Replace the ECU if required.					
P1201	Injector #1 Circuit Short	- Injector #1 circuit malfunction: Short. • If the trouble recurs with the injector removed, replace the injector. Perform C2I coding and check again. • If the trouble does not recur, check the wiring harness between the injector and ECU (ECU pin: #117, #114). - Replace the ECU if required.					
P1202	Injector #2 Circuit Short	- Injector #2 circuit malfunction: Short. • If the trouble recurs with the injector removed, replace the injector. Perform C2I coding and check again. • If the trouble does not recur, check the wiring harness between the injector and ECU (ECU pin: #118, #121). - Replace the ECU if required.					
P1204	Injector #4 Circuit Short	- Injector #4 circuit malfunction: Short. • If the trouble recurs with the injector removed, replace the injector. Perform C2I coding and check again. • If the trouble does not recur, check the wiring harness between the injector and ECU (ECU pin: #117, #115). - Replace the ECU if required.					
P1205	Injector #5 Circuit Short	- Injector #5 circuit malfunction: Short. • If the trouble recurs with the injector removed, replace the injector. Perform C2I coding and check again. • If the trouble does not recur, check the wiring harness between the injector and ECU (ECU pin: #118, #120). - Replace the ECU if required.					

FamaSOS.com

CHANGED BY	
EFFECTIVE DATE	
AFFECTED VIN	

DTC	Trouble	Help	Torque Reduction (max.50%)	Torque Reduction (max.20%)	Delayed Engine Stop	Immediately Engine Stop	Limp Home Mode
P1203	Injector #3 Circuit Short	- Injector #3 circuit malfunction: Short. • If the trouble recurs with the injector removed, replace the injector. Perform C2I coding and check again. • If the trouble does not recur, check the wiring harness between the injector and ECU (ECU pin: #117, #116). - Replace the ECU if required.					
P0182	Fuel temperature sensor - Short to Ground	- The sensing values are higher than specified values for fuel temperature sensor. (More than maximum sensing values 140°C - Circuit Short) - Actual fuel temp. vs. Resistance • -40°C: 75.780 Ω -20°C: 21.873 Ω • -10°C: 12.462 Ω 0°C: 7.355 Ω • 10°C: 4.481 Ω 20°C: 2.812 Ω • 25°C: 2.252 Ω 30°C: 1.814 Ω • 40°C: 1.199 Ω 50°C: 0.811 Ω • 70°C: 0.394 Ω 90°C: 0.206 Ω • 120°C: 0.087 Ω - Recovery values when fuel temperature sensor failure: 95°C - Check the supply voltage to sensor. - Check the wiring harness for open, short and poor contact. • ECU pin: #109, #110 - Check the ECU wiring and replace the ECU if required.					
P0183	Fuel temperature sensor - Short to B+	- The sensing values are lower than specified values for fuel temperature sensor. (Less than maximum sensing values - 40°C - Circuit Open) - Actual fuel temp. vs. Resistance • -40°C: 75.780 Ω -20°C: 21.873 Ω • -10°C: 12.462 Ω 0°C: 7.355 Ω • 10°C: 4.481 Ω 20°C: 2.812 Ω • 25°C: 2.252 Ω 30°C: 1.814 Ω • 40°C: 1.199 Ω 50°C: 0.811 Ω • 70°C: 0.394 Ω 90°C: 0.206 Ω • 120°C: 0.087 Ω - Recovery values when fuel temperature sensor failure: 95°C - Check the supply voltage to sensor. - Check the wiring harness for open, short and poor contact. • ECU pin: #109, #110 - Check the ECU wiring and replace the ECU if required.					

امداد خودرو
تلفن شبانه روزی: ۰۲۱-۷۷۸۶۲۰۸۵
FamaSOS.com

DTC	Trouble	Help	Torque Reduction (max.50%)	Torque Reduction (max.20%)	Delayed Engine Stop	Immediately Engine Stop	Limp Home Mode
P0180	Fuel temperature sensor - Malfunction	- The power source circuit is faulty for fuel temperature sensor. (Fuel temperature sensor is mounted in high pressure pump) - Actual fuel temp. vs. Resistance • -40°C: 75.780 Ω -20°C: 21.873 Ω • -10°C: 12.462 Ω 0°C: 7.355 Ω • 10°C: 4.481 Ω 20°C: 2.812 Ω • 25°C: 2.252 Ω 30°C: 1.814 Ω • 40°C: 1.199 Ω 50°C: 0.811 Ω • 70°C: 0.394 Ω 90°C: 0.206 Ω • 120°C: 0.087 Ω - Recovery values when fuel temperature sensor failure: 95°C - Check the supply voltage to sensor. - Check the wiring harness for open, short and poor contact. • ECU pin: #109, #110 - Check the ECU wiring and replace the ECU if required.					
P1678	Glow Plug Malfunction - Open	- Glow plug circuit malfunction: Open. - Check the glow plug wiring harness for open. • ECU pin #113 - Check the glow plug relay operations. - Check the glow plug power supply. - Check the ECU wiring and replace the ECU if required.					
P1679	Glow Plug Malfunction - Short	- Glow plug circuit malfunction: Short. - Check the glow plug wiring harness for open. • ECU pin #113 - Check the glow plug relay operations. - Check the glow plug power supply. - Check the ECU wiring and replace the ECU if required.					
P1680	Glow Plug Malfunction - Short to Ground	- Glow plug circuit malfunction: Short to ground. - Check the glow plug wiring harness for open. • ECU pin #113 - Check the glow plug relay operations. - Check the glow plug power supply. - Check the ECU wiring and replace the ECU if required.					
P1530	#1 Heater operating circuit - Open	- #1 heater circuit malfunction: Open. - Check the wiring harness for open. • ECU pin #61 - Check the heater relay operations. - If the forced operation is not available, replace the ECU. - Check the ECU wiring and replace the ECU if required.					

امداد خودرو فارما
تلفن شبانه روزی: ۰۲۱-۸۸۸۶۲۰۸۵
FarmaSOS.com

CHANGED BY	
EFFECTIVE DATE	
AFFECTED VIN	

DTC	Trouble	Help	Torque Reduction (max.50%)	Torque Reduction (max.20%)	Delayed Engine Stop	Immediately Engine Stop	Limp Home Mode
P1531	#1 Heater operating circuit - Short	- #1 heater circuit malfunction: Short. - Check the wiring harness for short. • ECU pin #61 - Check the heater relay operations. - If the forced operation is not available, replace the ECU. - Check the ECU wiring and replace the ECU if required.					
P1532	#1 Heater operating circuit - Short to Ground	- #1 heater circuit malfunction: Short to ground. - Check the wiring harness for short. • ECU pin #61 - Check the heater relay operations. - If the forced operation is not available, replace the ECU. - Check the ECU wiring and replace the ECU if required.					
P1534	#2 Heater operating circuit - Open	- #2 heater circuit malfunction: Open. - Check the wiring harness for open. • ECU pin #62 - Check the heater relay operations. - If the forced operation is not available, replace the ECU. - Check the ECU wiring and replace the ECU if required.					
P1535	#2 Heater operating circuit - Short	- #2 heater circuit malfunction: Short. - Check the wiring harness for short. • ECU pin #62 - Check the heater relay operations. - If the forced operation is not available, replace the ECU. - Check the ECU wiring and replace the ECU if required.					
P1536	#2 Heater operating circuit - Short to Ground	- #2 heater circuit malfunction: Short to ground. - Check the wiring harness for short. • ECU pin #62 - Check the heater relay operations. - If the forced operation is not available, replace the ECU. - Check the ECU wiring and replace the ECU if required.					

امداد خودرو فارسا
تلفن شبانه روزی: ۰۲۱۸۸۸۶۲۰۸۵
FarsaSOS.com

DTC	Trouble	Help	Torque Reduction (max.50%)	Torque Reduction (max.20%)	Delayed Engine Stop	Immediately Engine Stop	Limp Home Mode
P1254	Maximum Rail Pressure Control Malfunction (IMV Fault)	- Rail pressure faults: Too high - Check the IMV wiring harness. - Check the ECU wiring harness. • Check the ECU pin #87 for open and short. - Check the high pressure fuel lines, fuel rails and high pressure pipes for leaks. - Check the rail pressure sensor. • Supply voltage: 5 ± 0.1 V • Output voltage at 1600 bar: 4.055 ± 0.125 V • Output voltage at atmospheric pressure: 0.5 ± 0.04 V - Check the transfer pressure fuel pressure lines. • Check the fuel level in fuel tank. Check the fuel system for air influx. • Check the fuel filter specification. - Check the IMV resistance: 5.44 Ω • When out of specified value: replace high pressure pump and IMV - Replace the ECU if required.					
P1253	Minimum Rail Pressure Control Malfunction (IMV Fault)	- Rail pressure faults: Too low - Check the IMV wiring harness. - Check the ECU wiring harness. • Check the ECU pin #87 for open and short. - Check the high pressure fuel lines, fuel rails and high pressure pipes for leaks. - Check the rail pressure sensor. • Supply voltage: 5 ± 0.1 V • Output voltage at 1600 bar: 4.055 ± 0.125 V • Output voltage at atmospheric pressure: 0.5 ± 0.04 V - Check the transfer pressure fuel pressure lines. • Check the fuel level in fuel tank. Check the fuel system for air influx. • Check the fuel filter specification. - Check the IMV resistance: 5.44 Ω • When out of specified value: replace high pressure pump and IMV - Replace the ECU if required.					

امداد خودرو فارس
تلفن شبانه روزی
FarsSOS.com

CHANGED BY	
EFFECTIVE DATE	
AFFECTED VIN	

DTC	Trouble	Help	Torque Reduction (max.50%)	Torque Reduction (max.20%)	Delayed Engine Stop	Immediately Engine Stop	Limp Home Mode
P1256	Too Small Transfer Pressure Fuel in Rail Pressure System	- Rail pressure fault: IMV current trim too high, drift. - Check the IMV wiring harness. - Check the ECU wiring harness. • Check the ECU pin #87 for open and short. - Check the rail pressure sensor. • Supply voltage: 5 ± 0.1 V • Output voltage at 1600 bar: 4.055 ± 0.125 V • Output voltage at atmospheric pressure: 0.5 ± 0.04 V - Check the transfer pressure fuel pressure lines. • Check the fuel level in fuel tank. Check the fuel system for air influx. • Check the fuel filter specification. - Check the high pressure fuel system. • Check the fuel rails and high pressure pipes for leaks. - Check the IMV resistance: 5.44 Ω • When out of specified value: replace high pressure pump and IMV - Replace the ECU if required.					
P1257	Too Large Transfer Pressure Fuel in Rail Pressure System	- Rail pressure fault: IMV current trim too high, drift. - Check the IMV wiring harness. - Check the ECU wiring harness. • Check the ECU pin #87 for open and short. - Check the rail pressure sensor. • Supply voltage: 5 ± 0.1 V • Output voltage at 1600 bar: 4.055 ± 0.125 V • Output voltage at atmospheric pressure: 0.5 ± 0.04 V - Check the transfer pressure fuel pressure lines. • Check the fuel level in fuel tank. Check the fuel system for air influx. • Check the fuel filter specification. - Check the high pressure fuel system. • Check the fuel rails and high pressure pipes for leaks. - Check the IMV resistance: 5.44 Ω • When out of specified value: replace high pressure pump and IMV - Replace the ECU if required.					

امداد خودرو ما
تلفن شبانه روزی ۰۸۸۳۴۸۴۳۶۰۸۸
FarmaSOS.com

DTC	Trouble	Help	Torque Reduction (max.50%)	Torque Reduction (max.20%)	Delayed Engine Stop	Immediately Engine Stop	Limp Home Mode
P1258	Too Small High Pressure Fuel in Rail Pressure System	- Rail pressure fault: IMV current trim too high, drift. - Check the IMV wiring harness. - Check the ECU wiring harness. • Check the ECU pin #87 for open and short. - Check the rail pressure sensor. • Supply voltage: 5 ± 0.1 V • Output voltage at 1600 bar: 4.055 ± 0.125V • Output voltage at atmospheric pressure: 0.5 ± 0.04 V - Check the transfer pressure fuel lines. • Check the fuel level in fuel tank. Check the fuel system for air influx. • Check the fuel filter specification. - Check the high pressure fuel system. • Check the fuel rails and high pressure pipes for leaks. - Check the IMV resistance: 5.44 Ω • When out of specified value: replace high pressure pump and IMV - Replace the ECU if required.					
P1259	Too Large High Pressure Fuel in Rail Pressure System	- Rail pressure fault: IMV current trim too high, drift. - Check the IMV wiring harness. - Check the ECU wiring harness. • Check the ECU pin #87 for open and short. - Check the rail pressure sensor. • Supply voltage: 5 ± 0.1 V • Output voltage at 1600 bar: 4.055 ± 0.125 V • Output voltage at atmospheric pressure: 0.5 ± 0.04 V - Check the transfer pressure fuel lines. • Check the fuel level in fuel tank. Check the fuel system for air influx. • Check the fuel filter specification. - Check the high pressure fuel system. • Check the fuel rails and high pressure pipes for leaks. - Check the IMV resistance: 5.44 Ω • When out of specified value: replace high pressure pump and IMV - Replace the ECU if required.					

امداد خودرو ولیا
تلفن شبانه روزی: ۰۲۱-۸۸۶۲۰۸۵
FarmaSOS.com

CHANGED BY	
EFFECTIVE DATE	
AFFECTED VIN	

DTC	Trouble	Help	Torque Reduction (max.50%)	Torque Reduction (max.20%)	Delayed Engine Stop	Immediately Engine Stop	Limp Home Mode
P1191	Pressure Build Up - Too Slow	- The pressure build up during cranking is too slow. - Check the IMV wiring harness. - Check the ECU wiring harness. • Check the ECU pin #87 for open and short. - Check the rail pressure sensor. • Supply voltage: 5 ± 0.1 V • Output voltage at 1600 bar: 4.055 ± 0.125 V • Output voltage at atmospheric pressure: 0.5 ± 0.04 V - Check the transfer pressure fuel lines. • Check the fuel level in fuel tank. Check the fuel system for air influx. • Check the fuel filter specification. - Check the high pressure fuel system. • Check the fuel rails and high pressure pipes for leaks. - Check the IMV resistance: 5.44 Ω • When out of specified value: replace high pressure pump and IMV - Replace the ECU if required.					
P0255	IMV Driver Circuit Malfunction - Open	- IMV driver circuit malfunction: Open - Check the IMV wiring harness. • Check the ECU pin #87 for open. - Check the ECU wiring harness. - Check the IMV resistance. • When out of specified value: replace high pressure pump and IMV - Replace the ECU if required.			O		O
P0251	IMV Driver Circuit Malfunction - Short	- IMV driver circuit malfunction: Short - Check the IMV wiring harness. • Check the ECU pin #87 for short. - Check the ECU wiring harness. - Check the IMV resistance. • When out of specified value: replace high pressure pump and IMV - Replace the ECU if required.			O		O
P0253	IMV Driver Circuit Malfunction - Short to Ground	- IMV driver circuit malfunction: Short to ground - Check the IMV wiring harness. • Check the ECU pin #87 for short to ground. - Check the ECU wiring harness. - Check the IMV resistance. • When out of specified value: replace high pressure pump and IMV - Replace the ECU if required.			O		O

امداد خودرو فارما
تلفن شبانه روزی: ۰۲۱-۸۸۸۶۲۰۸۵
FarmaSOS.com

DTC	Trouble	Help	Torque Reduction (max.50%)	Torque Reduction (max.20%)	Delayed Engine Stop	Immediately Engine Stop	Limp Home Mode
P0113	Intake Air Temperature Circuit Malfunction - Short	- The intake air temperature sensing value is lower than maximum value of 150°C: Open - Check the supply voltage to sensor. • Actual air temperature vs. Voltages • 20°C: 2.65 Ω • 30°C: 2.18 Ω • 50°C: 1.40 Ω • Recovery values when intake air temperature sensor failure: 50°C - Check the sensor wiring harness. • Check the source power circuit for short to ground. - Check the sensor resistance. • Actual air temperature vs. Resistance • -40°C: 39.260 Ω • -20°C: 13.850 Ω • 0°C: 5.499 Ω • 20°C: 2.420 Ω • 40°C: 1.166 Ω • 60°C: 0.609 Ω • 80°C: 0.340 Ω • 100°C: 0.202 Ω • 120°C: 0.127 Ω • Recovery values when intake air temperature sensor failure: 50°C - Check the ECU wiring harness. • Check the ECU pin #64 and #84 for open. - Replace the ECU if required.					

امداد خودرو فارما
تلفن شبانه روزی: ۰۲۱-۸۸۷۶۲۰۸۵
FarmaSOS.com

CHANGED BY	
EFFECTIVE DATE	
AFFECTED VIN	

DTC	Trouble	Help	Torque Reduction (max.50%)	Torque Reduction (max.20%)	Delayed Engine Stop	Immediately Engine Stop	Limp Home Mode
P0112	Intake Air Temperature Circuit Malfunction - Open	- The intake air temperature sensing value is lower than maximum value of 150°C: Open - Check the supply voltage to sensor. • Actual air temperature vs. Voltages • 20°C: 2.65 Ω • 30°C: 2.18 Ω • 50°C: 1.40 Ω • Recovery values when intake air temperature sensor failure: 50°C - Check the sensor wiring harness. • Check the source power circuit for short to ground. - Check the sensor resistance. • Actual air temperature vs. Resistance • -40°C: 39.260 Ω • -20°C: 13.850 Ω • 0°C: 5.499 Ω • 20°C: 2.420 Ω • 40°C: 1.166 Ω • 60°C: 0.609 Ω • 80°C: 0.340 Ω • 100°C: 0.202 Ω • 120°C: 0.127 Ω • Recovery values when intake air temperature sensor failure: 50°C - Check the ECU wiring harness. • Check the ECU pin #64 and #84 for open. - Replace the ECU if required.					

امداد خودرو فارما
تلفن شبانه روزی: ۰۲۱-۸۸۷۶۲۰۸۵
FarmaSOS.com

DTC	Trouble	Help	Torque Reduction (max.50%)	Torque Reduction (max.20%)	Delayed Engine Stop	Immediately Engine Stop	Limp Home Mode
P0110	Intake Air Temperature Circuit Malfunction - Source Power Problem	- The intake air temperature sensing value is lower than minimum value or higher than maximum value, or the external power to HFM sensor is faulty. - Check the supply voltage to sensor. • Actual air temperature vs. Voltages • 20°C: 2.65 Ω • 30°C: 2.18 Ω • 50°C: 1.40 Ω • Recovery values when intake air temperature sensor failure: 50°C - Check the sensor wiring harness. • Check the source power circuit for short to ground. - Check the sensor resistance. • Actual air temperature vs. Resistance • -40°C: 39.260 Ω • -20°C: 13.850 Ω • 0°C: 5.499 Ω • 20°C: 2.420 Ω • 40°C: 1.166 Ω • 60°C: 0.609 Ω • 80°C: 0.340 Ω • 100°C: 0.202 Ω • 120°C: 0.127 Ω • Recovery values when intake air temperature sensor failure: 50°C - Check the ECU wiring harness. • Check the ECU pin #64 and #84 for open and short. - Replace the ECU if required.					
P1171	#1 Injector MDP Malfunction	- The #1 injector MDP is faulty. - Replace the injector and perform C2I coding again.					
P1172	#2 Injector MDP Malfunction	- The #2 injector MDP is faulty. - Replace the injector and perform C2I coding again.					
P1174	#4 Injector MDP Malfunction	- The #4 injector MDP is faulty. - Replace the injector and perform C2I coding again.					
P1175	#5 Injector MDP Malfunction	- The #5 injector MDP is faulty. - Replace the injector and perform C2I coding again.					
P1173	#3 Injector MDP Malfunction	- The #3 injector MDP is faulty. - Replace the injector and perform C2I coding again.					

امداد خودرو فارما
تلفن شبانه روزی: ۰۲۱ ۸۸۶۲۰۸۵۵
FarmaSOS.com

CHANGED BY	
EFFECTIVE DATE	
AFFECTED VIN	

DTC	Trouble	Help	Torque Reduction (max.50%)	Torque Reduction (max.20%)	Delayed Engine Stop	Immediately Engine Stop	Limp Home Mode
P1252	Too High IMV Pressure	- The rail pressure is excessively high. - Check the IMV wiring harness. - Check the ECU wiring harness. • Check the ECU pin #87 for open and short. - Check the rail pressure sensor. • Supply voltage: 5 ± 0.1 V • Output voltage at 1600 bar: 4.055 ± 0.125 V • Output voltage at atmospheric pressure: 0.5 ± 0.04 V - Check the transfer pressure fuel lines. • Check the fuel level in fuel tank. Check the fuel system for air influx. • Check the fuel filter specification. - Check the high pressure fuel system. • Check the fuel rails and high pressure pipes for leaks. - Check the IMV resistance: 5.44 Ω • When out of specified value: replace high pressure pump and IMV - Replace the ECU if required.					
P1120	Accelerator Pedal Sensor #1 Malfunction	- The potentiometer 1 is not plausible with potentiometer 2. - Check the supply voltage to sensor. - Check the wiring harness. • Check the ECU pin #72, 53 and #32, 14 for open and short. - Check the accelerator pedal module. - Check the ECU wiring harness. - Replace the ECU if required.	O				
P1121	Accelerator Pedal Sensor #2 Malfunction	- The potentiometer 1 is not plausible with potentiometer 2. - Check the supply voltage to sensor. - Check the wiring harness. • Check the ECU pin #72, 53 and #32, 14 for open and short. - Check the accelerator pedal module. - Check the ECU wiring harness. - Replace the ECU if required.	O				
P1122	Accelerator Pedal Sensor Malfunction (Limp Home Mode)	- When triggering limp home mode. - Check the supply voltage to sensor. - Check the wiring harness. • Check the ECU pin #72, 71, 53 and #57, 32, 14 for open and short. - Check the accelerator pedal module. - Check the ECU wiring harness. - Replace the ECU if required.					

امداد خودرو ایران
تلفن شبانه روزی: ۰۲۱ ۸۸۶۲۰۸۸۵
FarmaSOS.com

DTC	Trouble	Help	Torque Reduction (max.50%)	Torque Reduction (max.20%)	Delayed Engine Stop	Immediately Engine Stop	Limp Home Mode
P1123	Accelerator Pedal Sensor Malfunction (Torque Mode)	- When triggering reduced torque mode. - Check the supply voltage to sensor. - Check the wiring harness. • Check the ECU pin #72, 71, 53 and #57, 32, 14 for open and short. - Check the accelerator pedal module. - Check the ECU wiring harness. - Replace the ECU if required	O				
P1124	Accelerator Pedal Sensor Malfunction - Stuck	- The accelerator pedal sensor is stuck. - Check the brake switch wiring harness and operations. - Check the accelerator pedal operations. - Check the accelerator pedal module. - Check the ECU wiring harness. - Replace the ECU if required.					O
P0122	Accelerator Pedal Sensor #1 Malfunction - Open	- Out of range about potentiometer 1 of pedal sensor: lower than specified values - Check the supply voltage to sensor. - Check the wiring harness. • Check the circuit for open and short. • Check the ECU pin #71, #53 for open and poor contact. - Check the accelerator pedal. - Check the ECU wiring harness. - Replace the ECU if required.	O				
P0123	Accelerator Pedal Sensor #1 Malfunction - Short	- Out of range about potentiometer 1 of pedal sensor: higher than specified values - Check the supply voltage to sensor. - Check the wiring harness. • Check the circuit for open and short. • Check the ECU pin #71, #53 for short and poor contact. - Check the accelerator pedal. - Check the ECU wiring harness. - Replace the ECU if required.	O				
P0120	Accelerator Pedal Sensor #1 Malfunction - Supply Voltage Fault	- The supply voltage is faulty. - Check the supply voltage to sensor. - Check the wiring harness. • Check the circuit for open and short. • Check the ECU pin #72, #53 for open and short. - Check the accelerator pedal. - Check the ECU wiring harness. - Replace the ECU if required.	O				

امداد خودرو فارما
تلفن شبانه روزی: ۰۲۱-۸۸۸۶۲۰۸۵
FarmaSOS.com

CHANGED BY	
EFFECTIVE DATE	
AFFECTED VIN	

DTC	Trouble	Help	Torque Reduction (max.50%)	Torque Reduction (max.20%)	Delayed Engine Stop	Immediately Engine Stop	Limp Home Mode
P0222	Accelerator Pedal Sensor #2 Malfunction - Open	- Out of range about potentiometer 2 of pedal sensor: lower than specified values - Check the supply voltage to sensor. - Check the wiring harness. • Check the circuit for open and short. • Check the ECU pin #32, #14 for open and poor contact. - Check the accelerator pedal. - Check the ECU wiring harness. - Replace the ECU if required.	O				
P0223	Accelerator Pedal Sensor #2 Malfunction - Short	- Out of range about potentiometer 2 of pedal sensor: higher than specified values - Check the supply voltage to sensor. - Check the wiring harness. • Check the circuit for open and short. • Check the ECU pin #32, #14 for short and poor contact. - Check the accelerator pedal. - Check the ECU wiring harness. - Replace the ECU if required.	O				
P0220	Accelerator Pedal Sensor #2 Malfunction - Supply Voltage Fault	- The supply voltage is faulty. - Check the supply voltage to sensor. - Check the wiring harness. • Check the circuit for open and short. • Check the ECU pin #57, #14 for open and short. - Check the accelerator pedal. - Check the ECU wiring harness. - Replace the ECU if required.	O				
P0192	Fuel Rail Pressure Sensor Malfunction - Open	- The fuel rail pressure sensing values are lower than specified values. • Minimum sensing values: - 1 1 2 bar (Open) - Check the supply voltage to sensor. • Output voltage at 1600 bar: 4.055 ± 0.125 V • Output voltage at atmospheric pressure: 0.5 ± 0.04 V - Check the sensor and ECU wiring harness. • Check the ECU pin #25, #26 for open and poor contact. • Check the fuel rails and high pressure pipes for leaks. - Check the fuel rail pressure sensor. - Replace the ECU if required.	O				

امداد خودرو فارما
تلفن شبانه روزی: ۰۲۱-۸۸۴۶۲۰۸۵
FarmaSOS.com

DTC	Trouble	Help	Torque Reduction (max.50%)	Torque Reduction (max.20%)	Delayed Engine Stop	Immediately Engine Stop	Limp Home Mode
P0193	Fuel Rail Pressure Sensor Malfunction - Short	- The fuel rail pressure sensing values are higher than specified values. • Maximum sensing values: 1,600 bar (Short) - Check the supply voltage to sensor. • Output voltage at 1600 bar: 4.055± 0.125V • Output voltage at atmospheric pressure: 0.5±0.04V - Check the sensor and ECU wiring harness. • Check the ECU pin #25, #26 for short and poor contact. • Check the fuel rails and high pressure pipes for leaks. - Check the fuel rail pressure sensor. - Replace the ECU if required.	O				
P0190	Supply Voltage Fault to Fuel Rail Pressure Sensor	- The supply voltage to fuel rail pressure sensor is faulty. - Check the supply voltage to sensor. • Output voltage at 1600 bar: 4.055± 0.125V • Output voltage at atmospheric pressure: 0.5±0.04V - Check the sensor and ECU wiring harness. • Check the ECU pin #6, #26 for open and short. • Check the fuel rails and high pressure pipes for leaks. - Check the fuel rail pressure sensor. - Replace the ECU if required.	O				
P0191	Fuel Rail Pressure Sensor Signal Fault	- The rail pressure drop is too high. - Check the supply voltage to sensor. • Output voltage at 1600 bar: 4.055 ± 0.125 V • Output voltage at atmospheric pressure: 0.5 ± 0.04 V - Check the sensor and ECU wiring harness. • Check the ECU pin #6, #26 for open and short. • Check the fuel rails and high pressure pipes for leaks. - Check the fuel rail pressure sensor. - Replace the ECU if required.	O				

امداد خودرو فارما
تلفن شبانه روزی: ۰۲۱۸۸۸۶۶۰۸۵
FarmaSOS.com

CHANGED BY	
EFFECTIVE DATE	
AFFECTED VIN	

DTC	Trouble	Help	Torque Reduction (max.50%)	Torque Reduction (max.20%)	Delayed Engine Stop	Immediately Engine Stop	Limp Home Mode
P1192	Fuel Rail Pressure Sensor Initial Signal Fault - Low	- The rail pressure sensor initial values are lower than specified values with the ignition “ON”. • Minimum sensing values: - 90 bar (Open) - Check the supply voltage to sensor. • Output voltage at 1600 bar: 4.055 ± 0.125 V • Output voltage at atmospheric pressure: 0.5 ± 0.04 V - Check the sensor and ECU wiring harness. • Check the ECU pin #25, #26 for open and poor contact. • Check the fuel rails and high pressure pipes for leaks. - Check the fuel rail pressure sensor. - Replace the ECU if required.	O				
P1193	Fuel Rail Pressure Sensor Initial Signal Fault - High	- The rail pressure sensor initial values are higher than specified values with the ignition “ON”. • Maximum sensing values: 90 bar (Short) - Check the supply voltage to sensor. • Output voltage at 1600 bar: 4.055 ± 0.125 V • Output voltage at atmospheric pressure: 0.5 ± 0.04 V - Check the sensor and ECU wiring harness. • Check the ECU pin #25, #26 for short and poor contact. • Check the fuel rails and high pressure pipes for leaks. - Check the fuel rail pressure sensor. - Replace the ECU if required.	O				
P1190	Fuel Rail Pressure Sensor Initial Signal Fault	- The rail pressure sensor initial values are higher or lower than specified values with the ignition “ON”. • Maximum sensing values: 90 bar (Short) • Minimum sensing values: - 90 bar (Open) - Check the supply voltage to sensor. • Output voltage at 1600 bar: 4.055 ± 0.125 V • Output voltage at atmospheric pressure: 0.5 ± 0.04 V - Check the sensor and ECU wiring harness. • Check the ECU pin #25, #26 for open and short. • Check the fuel rails and high pressure pipes for leaks. - Check the fuel rail pressure sensor. - Replace the ECU if required.	O				

امداد خودرو فارس
تلفن شبانه روزی: ۰۲۱-۸۸۸۶۲۰۸۵
FarsaSOS.com

DTC	Trouble	Help	Torque Reduction (max.50%)	Torque Reduction (max.20%)	Delayed Engine Stop	Immediately Engine Stop	Limp Home Mode
P0215	Main Relay Fault - Stuck	- The main relay is stuck ; Shut down. - Resistance of main relay: 92 Ω ± 9 Ω (at 20°C) - Check the main relay wiring harness. - Check the ECU wiring harness. • Check the ECU pin #3, 4, 5 for open and short. - If the forced operation is not available, replace the ECU. - Check the fuse for main relay					
P1500	Vehicle Speed Fault	- The vehicle speed signal through CAN communication is faulty. - Check the CAN communication line for open and short. - Check the ABS/ESP and TCU communication lines. - Check the ECU wiring harness. - Replace the ECU if required.					
P0642	ECU Supply Voltage 1 Fault - Low (5 V)	- Malfunction reference supply voltage from ECU • Supply voltage: 5 V - Check the supply voltage to each sensor • Supply voltage (5 V): accelerator pedal sensor 1, HFM sensor, rail pressure sensor, booster pressure sensor, cam sensor - Check the wiring harnesses. - Replace the ECU if required.					
P0643	ECU Supply Voltage 1 Fault - High (5 V)	- Malfunction reference supply voltage from ECU • Supply voltage: 5 V - Check the supply voltage to each sensor • Supply voltage (5 V): accelerator pedal sensor 1, HFM sensor, rail pressure sensor, booster pressure sensor, cam sensor - Check the wiring harnesses. - Replace the ECU if required.					
P0641	ECU Supply Voltage 1 Fault (5 V)	- Malfunction reference supply voltage from ECU • Supply voltage: 5 V - Check the supply voltage to each sensor • Supply voltage (5 V): accelerator pedal sensor 1, HFM sensor, rail pressure sensor, booster pressure sensor, cam sensor - Check the wiring harnesses. - Replace the ECU if required.					

امداد خودرو فارما
تلفن شبانه روزی: ۰۲۱-۸۸۸۶۲۰۸۵
FarmaSOS.com

CHANGED BY	
EFFECTIVE DATE	
AFFECTED VIN	

DTC	Trouble	Help	Torque Reduction (max.50%)	Torque Reduction (max.20%)	Delayed Engine Stop	Immediately Engine Stop	Limp Home Mode
P0652	ECU Supply Voltage 2 Fault - Low (5 V)	- Malfunction reference supply voltage from ECU • Supply voltage: 5 V - Check the supply voltage to each sensor • Supply voltage (5 V): accelerator pedal sensor 1, HFM sensor, rail pressure sensor, booster pressure sensor, cam sensor - Check the wiring harnesses. - Replace the ECU if required.			O		O
P0653	ECU Supply Voltage 2 Fault - High (5 V)	- Malfunction reference supply voltage from ECU • Supply voltage: 5 V - Check the supply voltage to each sensor • Supply voltage (5 V): accelerator pedal sensor 1, HFM sensor, rail pressure sensor, booster pressure sensor, cam sensor - Check the wiring harnesses. - Replace the ECU if required.			O		O
P0651	ECU Supply Voltage 2 Fault (5 V)	- Malfunction reference supply voltage from ECU • Supply voltage: 5 V - Check the supply voltage to each sensor • Supply voltage (5 V): accelerator pedal sensor 1, HFM sensor, rail pressure sensor, booster pressure sensor, cam sensor - Check the wiring harnesses. - Replace the ECU if required.			O		O
P0698	ECU Supply Voltage Fault - Low (2.5 V)	- Malfunction reference supply voltage from ECU • Supply voltage: 2.5 V - Check the supply voltage to each sensor • Supply voltage (2.5 V): accelerator pedal sensor 2 - Check the wiring harnesses. - Replace the ECU if required.					
P0699	ECU Supply Voltage Fault - High (2.5 V)	- Malfunction reference supply voltage from ECU • Supply voltage: 2.5 V - Check the supply voltage to each sensor • Supply voltage (2.55 V): accelerator pedal sensor 2 - Check the wiring harnesses. - Replace the ECU if required.					

امداد خودرو فارما
تلفن شبانه روزی: ۰۲۱-۸۸۸۶۲۰۸۵
FarmaSOS.com

DTC	Trouble	Help	Torque Reduction (max.50%)	Torque Reduction (max.20%)	Delayed Engine Stop	Immediately Engine Stop	Limp Home Mode
P0697	ECU Supply Voltage Fault (2.5 V)	- Malfunction reference supply voltage from ECU • Supply voltage: 2.5 V - Check the supply voltage to each sensor • Supply voltage (2.55 V): accelerator pedal sensor 2 - Check the wiring harnesses. - Replace the ECU if required.					
P0245	Turbo Charger Actuator Circuit Fault - Short	- The waste gate driver circuit is short to ground or open - Check the actuator wiring harness. - Check the solenoid valve. - Check the ECU wiring harness. • Check the ECU pin #95 for open and short. - Replace the ECU if required.	O				
P0246	Turbo Charger Actuator Circuit Fault - Short to B+	- The turbo charger actuator power source circuit is short. - Check the actuator wiring harness. - Check the solenoid valve. - Check the ECU wiring harness for short and poor contact. - Replace the ECU if required.	O				
P0606	ECU Watchdog Fault	- The ECU is defective. - Check the chassis ground wiring harness. - Check the ECU. - Replace the ECU if required.					
P1607	ECU Injector Cut Fault	- The ECU is defective. - Check the chassis ground wiring harness. - Check the ECU. - Replace the ECU if required.					
P1600	ECU Shut Down Fault	- The ECU is defective. - Check the chassis ground wiring harness. - Check the ECU. - Replace the ECU if required.					
P1601	ECU Fault	- The ECU is defective. - Check the chassis ground wiring harness. - Check the ECU. - Replace the ECU if required.					
P1602	ECU Fault	- The ECU is defective. - Check the chassis ground wiring harness. - Check the ECU. - Replace the ECU if required.					

امداد خودرو ما
تلفن شبانه روزی: ۰۲۱ ۸۸۸۶۲۰۸۵
FarmaSOS.com

CHANGED BY	
EFFECTIVE DATE	
AFFECTED VIN	

DTC	Trouble	Help	Torque Reduction (max.50%)	Torque Reduction (max.20%)	Delayed Engine Stop	Immediately Engine Stop	Limp Home Mode
P1614	ECU C2I/MDP Fault	- The ECU is defective. - Check the chassis ground wiring harness. - Check the ECU. - Replace the ECU if required.					O
P1615	ECU Fault	- The ECU is defective. - Check the chassis ground wiring harness. - Check the ECU. - Replace the ECU if required.					O
P1616	ECU Fault	- The ECU is defective. - Check the chassis ground wiring harness. - Check the ECU. - Replace the ECU if required.					O
P1606	ECU Fault	- The ECU is defective. - Check the chassis ground wiring harness. - Check the ECU. - Replace the ECU if required.					O
P1620	ECU Fault	- The ECU is defective. - Check the chassis ground wiring harness. - Check the ECU. - Replace the ECU if required.					O
P1621	ECU Fault	- The ECU is defective. - Check the chassis ground wiring harness. - Check the ECU. - Replace the ECU if required.					O
P1622	ECU Fault	- The ECU is defective. - Check the chassis ground wiring harness. - Check the ECU. - Replace the ECU if required.					O
P1603	ECU Fault	- The ECU is defective. - Check the chassis ground wiring harness. - Check the ECU. - Replace the ECU if required.				O	
P1604	ECU Fault	- The ECU is defective. - Check the chassis ground wiring harness. - Check the ECU. - Replace the ECU if required.				O	
P1605	ECU Fault	- The ECU is defective. - Check the chassis ground wiring harness. - Check the ECU. - Replace the ECU if required.				O	
P1148	Accelerometer (Knock Sensor) Learning Fault	- Check if the MDP is successful. - Check the accelerometer (knock sensor) sensor and wiring harness. - Replace the ECU if required.		O			

امداد خودرو
تلفن شبانه روزی: ۰۲۱-۸۸۸۶۲۰۸۵
FarmaSOS.com

DTC	Trouble	Help	Torque Reduction (max.50%)	Torque Reduction (max.20%)	Delayed Engine Stop	Immediately Engine Stop	Limp Home Mode
P0400	EGR Control Valve Fault	- When the EGR emission is more than specified value. • The EGR controller circuit is open or short to ground. • The EGR controller is short to battery. - Check the EGR actuator wiring harness. - Check the supply voltage to EGR solenoid valve. - Check if the EGR valve is stuck. - Check the resistance of EGR valve: 15.4 Ω. - Check the ECU wiring harness. • Check the ECU pin #96 for open and short.					
P1235	VGT Operation Fault	- The boost pressure control is faulty. - Check the air intake system. - Check the supply voltage to sensor. - Check the wiring harness and the ECU wiring harness. - Replace the ECU if required.	O				
P1608	ECU Fault	- The ECU is defective. - Check the chassis ground wiring harness. - Check the ECU. - Replace the ECU if required.					
P0335	No Crank Signals	- Refer to P0372.					
P1170	Torque Trim Fault - High	- Refer to P0372.					
P1676	Glow Plug Communication Fault	- The communication between ECU and glow plug is faulty. - Check the communication line between ECU and glow plug. - Check the glow plug wiring harness. - Check the resistance of glow plug: below 1 Ω. - Check the glow plug relay. - Check the ECU wiring harness. • Check the ECU pin #113 for short to ground. - Replace the ECU if required.					
P1677	Glow Plug Controller Fault	- The communication between ECU and glow plug is faulty. - Check the communication line between ECU and glow plug. - Check the glow plug wiring harness. - Check the resistance of glow plug: below 1Ω. - Check the glow plug relay. - Check the ECU wiring harness. • Check the ECU pin #113 for short to ground. - Replace the ECU if required.					

امداد خودرو فارما
تلفن شبانه روزی: ۰۲۱-۸۸۸۴۲۰۸۵
FarmaSOS.com

CHANGED BY	
EFFECTIVE DATE	
AFFECTED VIN	

DTC	Trouble	Help	Torque Reduction (max.50%)	Torque Reduction (max.20%)	Delayed Engine Stop	Immediately Engine Stop	Limp Home Mode
P0671	#1 Glow Plug Fault - Open	- The glow plug circuit is open. - Check the communication line between ECU and each glow plug. - Check each glow plug wiring harness. - Check the resistance of each glow plug: below 1 Ω. - Check each glow plug relay. - Check the ECU wiring harness. - Replace the ECU if required.					
P0672	#2 Glow Plug Fault - Open	- The glow plug circuit is open. - Check the communication line between ECU and each glow plug. - Check each glow plug wiring harness. - Check the resistance of each glow plug: below 1 Ω. - Check each glow plug relay. - Check the ECU wiring harness. - Replace the ECU if required.					
P0673	#3 Glow Plug Fault - Open	- The glow plug circuit is open. - Check the communication line between ECU and each glow plug. - Check each glow plug wiring harness. - Check the resistance of each glow plug: below 1 Ω. - Check each glow plug relay. - Check the ECU wiring harness. - Replace the ECU if required.					
P0674	#4 Glow Plug Fault - Open	- The glow plug circuit is open. - Check the communication line between ECU and each glow plug. - Check each glow plug wiring harness. - Check the resistance of each glow plug: below 1Ω. - Check each glow plug relay. - Check the ECU wiring harness. - Replace the ECU if required.					
P0675	#5 Glow Plug Fault - Open	- The glow plug circuit is open. - Check the communication line between ECU and each glow plug. - Check each glow plug wiring harness. - Check the resistance of each glow plug: below 1 Ω. - Check each glow plug relay. - Check the ECU wiring harness. - Replace the ECU if required.					
P1671	#1 Glow Plug Fault - Short (B+)	- The glow plug circuit is short. - Check the communication line between ECU and each glow plug. - Check each glow plug wiring harness. - Check the resistance of each glow plug: below 1 Ω. - Check each glow plug relay. - Check the ECU wiring harness. - Replace the ECU if required.					

امداد خودرو فارما
تلفن شبانه روزی: ۰۲۱-۸۸۷۲۰۸۵
FarmaSOS.com

DTC	Trouble	Help	Torque Reduction (max.50%)	Torque Reduction (max.20%)	Delayed Engine Stop	Immediately Engine Stop	Limp Home Mode
P1672	#2 Glow Plug Fault - Short (B+)	- The glow plug circuit is short. - Check the communication line between ECU and each glow plug. - Check each glow plug wiring harness. - Check the resistance of each glow plug: below 1 Ω - Check each glow plug relay. - Check the ECU wiring harness. - Replace the ECU if required.					
P1673	#3 Glow Plug Fault - Short (B+)	- The glow plug circuit is short. - Check the communication line between ECU and each glow plug. - Check each glow plug wiring harness. - Check the resistance of each glow plug: below 1 Ω - Check each glow plug relay. - Check the ECU wiring harness. - Replace the ECU if required.					
P1674	#4 Glow Plug Fault - Short (B+)	- The glow plug circuit is short. - Check the communication line between ECU and each glow plug. - Check each glow plug wiring harness. - Check the resistance of each glow plug: below 1 Ω - Check each glow plug relay. - Check the ECU wiring harness. - Replace the ECU if required.					
P1675	#5 Glow Plug Fault - Short (B+)	- The glow plug circuit is short. - Check the communication line between ECU and each glow plug. - Check each glow plug wiring harness. - Check the resistance of each glow plug: below 1Ω - Check each glow plug relay. - Check the ECU wiring harness. - Replace the ECU if required.					
P0700	TCU Signal Fault	- The communication between ECU and TCU is faulty. - Check the communication line between ECU and TCU. - Check the ECU pin #54, 73 for open and short. - Replace the ECU if required.					
P1540	Air Conditioner Operating Circuit Fault - Open	- Check the air conditioner sensors and wiring harnesses. - Check the ECU wiring harness. - Check the ECU if required.					
P1541	Air Conditioner Operating Circuit Fault - Short	- Check the air conditioner sensors and wiring harnesses. - Check the ECU wiring harness. - Check the ECU if required.					
P1542	Air Conditioner Operating Circuit Fault - Short to Ground	- Check the air conditioner sensors and wiring harnesses. - Check the ECU wiring harness. - Check the ECU if required.					

امداد خودرو فارما
تلفن شبانه روزی: ۰۲۱-۸۸۶۲۰۰۸۵
FarmaSOS.com

CHANGED BY	
EFFECTIVE DATE	
AFFECTED VIN	

DTC	Trouble	Help	Torque Reduction (max.50%)	Torque Reduction (max.20%)	Delayed Engine Stop	Immediately Engine Stop	Limp Home Mode
P1149	Too High Water Level in Fuel Filter	- Drain the water from fuel filter.					
P1634	Immobilizer Fault (refer to immobilizer section)	- No response from immobilizer. - Perform the immobilizer coding again. - Check the ECU wiring harness. • Check the ECU pin #34 for open and short. - Check the immobilizer unit for open and short or check the supply voltage. - Check the immobilizer antenna. - Replace the ECU if required.					
P1635	No response from Immobilizer (refer to immobilizer section)	- No response from immobilizer. - Perform the immobilizer coding again. - Check the ECU wiring harness. • Check the ECU pin #34 for open and short. - Check the immobilizer unit for open and short or check the supply voltage. - Check the immobilizer antenna. - Replace the ECU if required.					
P1630	Wrong response from Immobilizer (refer to immobilizer section)	- The invalid key is inserted or no communication between transponder and immobilizer (no response from transponder). - Perform the immobilizer coding again. - Check the ECU wiring harness. • Check the ECU pin #34 for open and short. - Check the immobilizer unit for open and short or check the supply voltage. - Check the immobilizer antenna and transponder for damage. - Replace the ECU if required.					
P1631	Immobilizer Fault (refer to immobilizer section)	- The immobilizer is not operating. - Perform the immobilizer coding again. - Check the ECU wiring harness. • Check the ECU pin #34 for open and short. - Check the immobilizer unit for open and short or check the supply voltage. - Check the immobilizer antenna and transponder for damage. - Replace the ECU if required.					
P1632	Immobilizer Fault (refer to immobilizer section)	- No response from immobilizer. - Perform the immobilizer coding again. - Check the ECU wiring harness. • Check the ECU pin #34 for open and short. - Check the immobilizer unit for open and short or check the supply voltage. - Check the immobilizer antenna and transponder for damage. - Replace the ECU if required.					

امداد خودرو
تلفن شبانه روزی: ۰۹۱۲۰۳۸۷۰۴۵
FarmaSOS.com

DTC	Trouble	Help	Torque Reduction (max.50%)	Torque Reduction (max.20%)	Delayed Engine Stop	Immediately Engine Stop	Limp Home Mode
P1633	Immobilizer Fault (refer to immobilizer section)	- No key coding. - Perform the immobilizer coding again. - Check the ECU wiring harness. • Check the ECU pin #34 for open and short. - Check the immobilizer unit for open and short or check the supply voltage. - Check the immobilizer antenna and transponder for damage. - Replace the ECU if required.					
P0633	Immobilizer Fault (refer to immobilizer section)	- Key memory is not available (permissible - 5). - Perform the immobilizer coding again. - Check the ECU wiring harness. • Check the ECU pin #34 for open and short. - Check the immobilizer unit for open and short or check the supply voltage. - Check the immobilizer antenna and transponder for damage. - Replace the ECU if required.					
P1636	Immobilizer Fault (refer to immobilizer section)	- Severe trouble is not defined. - Perform the immobilizer coding again. - Check the ECU wiring harness. • Check the ECU pin #34 for open and short. - Check the immobilizer unit for open and short or check the supply voltage. - Check the immobilizer antenna and transponder for damage. - Replace the ECU if required.					

امداد خودرو فارما
تلفن شبانه روزی: ۰۲۱-۸۸۸۶۲۰۸۵
FarmaSOS.com

CHANGED BY	
EFFECTIVE DATE	
AFFECTED VIN	

MEMO

امداد خودرو فارما
تلفن شبانه روزی: ۰۲۱-۸۸۸۶۲۰۸۵
FarmaSOS.com

INDEX OF DTC

HMF sensor Signal Fault (Electric Failure) DI10-75
P0102 ..... DI10-75
P0103 ..... DI10-75
P0100 ..... DI10-75

Cam Position Sensor (missing event) DI10-76
P0344 ..... DI10-76

Cam Position Sensor Malfunction
(Poor Synchronization of Crank and Cam) DI10-77
P0341 ..... DI10-77

Too Small Clearance of Crank Angle Sensor DI10-78
P0219 ..... DI10-78

Too Large Clearance of Crank Angle Sensor DI10-79
P0336 ..... DI10-79

Crank Angle Sensor Malfunction DI10-80
P0372 ..... DI10-80

Barometric Sensor Malfunction (Out of range, using
strategy of restoring by MAP sensor) DI10-81
P1107 ..... DI10-81
P1108 ..... DI10-81
P1105 ..... DI10-81

Battery Voltage Monitoring Signal Malfunction DI10-82
P0562 ..... DI10-82
P0563 ..... DI10-82
P0560 ..... DI10-82

Booster Pressure Sensor Malfunction
(Out of range with Key ON) DI10-84
P0109 ..... DI10-84
P0106 ..... DI10-84

Booster Pressure Sensor Malfunction
(Out of range with Key ON) DI10-86
P0107 ..... DI10-86
P0108 ..... DI10-86
P0105 ..... DI10-86
P1106 ..... DI10-86

Booster Pressure Malfunction
(Implausible Signal) DI10-88
P1109 ..... DI10-88

Brake Pedal Switch Malfunction DI10-90
P0571 ..... DI10-90

Brake Lamp Signal Fault DI10-91
P1572 ..... DI10-91
P1571 ..... DI10-91

High Wiring Resistance (Injector #1) DI10-92
P1286 ..... DI10-92
P1287 ..... DI10-92

High Wiring Resistance (Injector #2) DI10-93
P1288 ..... DI10-93
P1289 ..... DI10-93

High Wiring Resistance (Injector #3) DI10-94
P1292 ..... DI10-94
P1293 ..... DI10-94

High Wiring Resistance (Injector #4) DI10-95
P1294 ..... DI10-95
P1295 ..... DI10-95

High Wiring Resistance (Injector #5) DI10-96
P1290 ..... DI10-96
P1291 ..... DI10-96

Clutch Switch Malfunction DI10-97
P0704 ..... DI10-97

Coolant Temperature Sensor Malfunction
(Implausible Signal) DI10-98
P1115 ..... DI10-98

Coolant Temperature Sensor Malfunction
(Electric Fault) DI10-99
P0117 ..... DI10-99
P0118 ..... DI10-99
P0115 ..... DI10-99

Too Fast or Low Main Relay Operation DI10-100
P0685 ..... DI10-100

EGR Actuator Malfunction DI10-101
P1405 ..... DI10-101
P1406 ..... DI10-101

Condenser Fan Driving Signal Fault (Type 1) DI10-102
P1480 ..... DI10-102
P1481 ..... DI10-102
P1482 ..... DI10-102

FarmaSOS.com

CHANGED BY	
EFFECTIVE DATE	
AFFECTED VIN	

Condenser Fan Driving Signal Fault (Type 2) DI10-103
P1526 ..... DI10-103
P1527 ..... DI10-103
P1528 ..... DI10-103

#1 Accelerometer Malfunction
(Idling Signal/Too Small Noise Ratio) DI10-104
P0325 ..... DI10-104

#2 Accelerometer Malfunction
(Idling Signal/Too Small Noise Ratio) DI10-105
P0330 ..... DI10-105

Injector Bank 1 Malfunction
(Short to Ground or B+) DI10-106
P1611 ..... DI10-106
P1612 ..... DI10-106

Injector Bank 2 Malfunction
(Short to Ground or B+) DI10-108
P1618 ..... DI10-108
P1619 ..... DI10-108

Cylinder Balancing Fault (Injector #1) =
Clogged Air Intake System DI10-110
P0263 ..... DI10-110

Cylinder Balancing Fault (Injector #2) =
Clogged Air Intake System DI10-111
P0266 ..... DI10-111

Cylinder Balancing Fault (Injector #4) =
Clogged Air Intake System DI10-112
P0272 ..... DI10-112

Cylinder Balancing Fault (Injector #5) =
Clogged Air Intake System DI10-113
P0275 ..... DI10-113

Cylinder Balancing Fault (Injector #3) =
Clogged Air Intake System DI10-114
P0269 ..... DI10-114

Open Circuit (Injector #1) DI10-115
P0201 ..... DI10-115

Open Circuit (Injector #2) DI10-116
P0202 ..... DI10-116

Open Circuit (Injector #4) DI10-117
P0204 ..... DI10-117

Open Circuit (Injector #5) DI10-118
P0205 ..... DI10-118

Open Circuit (Injector #3) DI10-119
P0203 ..... DI10-119

HSD Circuit Short to LSE (Injector #1) DI10-120
P1201 ..... DI10-120

HSD Circuit Short to LSE (Injector #2) DI10-121
P1202 ..... DI10-121

HSD Circuit Short to LSE (Injector #4) DI10-122
P1204 ..... DI10-122

HSD Circuit Short to LSE (Injector #5) DI10-123
P1205 ..... DI10-123

HSD Circuit Short to LSE (Injector #3) DI10-124
P1203 ..... DI10-124

Fuel Temperature Sensor Malfunction DI10-125
P0182 ..... DI10-125
P0183 ..... DI10-125
P0180 ..... DI10-125

Glow Plug Malfunction (Driving Signal) DI10-126
P1678 ..... DI10-126
P1679 ..... DI10-126

Heater 1 Malfunction (Driving Signal) DI10-127
P1530 ..... DI10-127
P1531 ..... DI10-127
P1532 ..... DI10-127

Heater 2 Malfunction (Driving Signal) DI10-128
P1534 ..... DI10-128
P1535 ..... DI10-128
P1536 ..... DI10-128

Rail Pressure Control Fault
(Too High Pressure) DI10-129
P1254 ..... DI10-129
P1253 ..... DI10-129

Rail Pressure Control Fault
(Too High IMV Current Trim, drift) DI10-131
P1256 ..... DI10-131
P1257 ..... DI10-131
P1258 ..... DI10-131
P1259 ..... DI10-131

Rail Pressure Control Fault
(Too Slow Pressure Build Up while Cranking) DI10-133
P1191 ..... DI10-133

امداد خودرو فارما
تلفن شبانه روزی: ۰۲۱-۸۸۴۶۲۰۸۵
FarmaSOS.com

IMV Operation Fault (Electrical Fault) DI10-135
P0255 ..... DI10-135
P0251 ..... DI10-135
P0253 ..... DI10-135

Intake Air Temperature Sensor Fault
(Electric Fault) DI10-136
P0112 ..... DI10-136
P0113 ..... DI10-136
P0110 ..... DI10-136

MDP Fault (Injector #1) DI10-137
P1171 ..... DI10-137

MDP Fault (Injector #2) DI10-137
P1172 ..... DI10-137

MDP Fault (Injector #4) DI10-138
P1174 ..... DI10-138

MDP Fault (Injector #5) DI10-138
P1175 ..... DI10-138

MDP Fault (Injector #3) DI10-139
P1173 ..... DI10-139

Rail Pressure Fault (Too High) DI10-140
P1252 ..... DI10-140

Accelerator Pedal Sensor Malfunction
(Relationship between Track 1 and Track 2) DI10-142
P1120 ..... DI10-142
P1121 ..... DI10-142

Accelerator Pedal Sensor Malfunction
(Limp Home Mode Operation) DI10-143
P1122 ..... DI10-143

Accelerator Pedal Sensor Malfunction
(Torque Reduction Mode Operation) DI10-144
P1123 ..... DI10-144

Accelerator Pedal Sensor Malfunction
(Electrical Fault, Pedal Stuck) DI10-145
P1124 ..... DI10-145

Accelerator Pedal Sensor Malfunction
(Electrical Fault, Track 1) DI10-146
P0122 ..... DI10-146
P0123 ..... DI10-146
P0120 ..... DI10-146

Accelerator Pedal Sensor Malfunction
(Electrical Fault, Track 2) DI10-147
P0222 ..... DI10-147
P0223 ..... DI10-147
P0220 ..... DI10-147

Fuel Rail Pressure Sensor Malfunction
(Out of Range, ADC or Vref) DI10-148
P0192 ..... DI10-148
P0193 ..... DI10-148
P0190 ..... DI10-148
P0191 ..... DI10-148

Fuel Rail Pressure Sensor Malfunction
(Out of Range when Key ON) DI10-150
P1192 ..... DI10-150
P1193 ..... DI10-150
P1190 ..... DI10-150

Main Relay Malfunction - Stuck DI10-152
P0215 ..... DI10-152

Vehicle Speed Fault DI10-153
P1500 ..... DI10-153

5V Supply Voltage 1 Fault DI10-154
P0642 ..... DI10-154
P0643 ..... DI10-154
P0641 ..... DI10-154

5V Supply Voltage 2 Fault DI10-155
P0652 ..... DI10-155
P0653 ..... DI10-155
P0651 ..... DI10-155

2.5V Supply Voltage Fault DI10-156
P0698 ..... DI10-156
P0699 ..... DI10-156
P0697 ..... DI10-156

Turbo Charger Actuator Operation Fault (signal) DI10-157
P0245 ..... DI10-157
P0246 ..... DI10-157

ECU Watchdog Fault DI10-158
P0606 ..... DI10-158

ECU Watchdog Fault (Injector Cut-off) DI10-159
P1607 ..... DI10-159

ECU Watchdog Fault (Watchdog Trip) DI10-160
P1600 ..... DI10-160
P1601 ..... DI10-160
P1602 ..... DI10-160

امداد خودرو فارما
تلفن شبانه روزی: ۰۹۱۲-۸۸۶۲۰۸۵
Farma8OS.com

CHANGED BY	
EFFECTIVE DATE	
AFFECTED VIN	

ECU Non-Volatile Memory Fault DI10-161
P1614 ..... DI10-161
P1615 ..... DI10-161
P1616 ..... DI10-161
P1606 ..... DI10-161
P1620 ..... DI10-161
P1621 ..... DI10-161
P1622 ..... DI10-161

ECU Memory Integration Fault DI10-162
P1603 ..... DI10-162
P1604 ..... DI10-162
P1605 ..... DI10-162

Accelerometer Learning Fault DI10-163
P1148 ..... DI10-163

EGR Valve Control Fault DI10-164
P0400 ..... DI10-164

VGT Operation Fault DI10-165
P1235 ..... DI10-165

TBD DI10-167
P1608 ..... DI10-167

No Crank Signal DI10-168
P0335 ..... DI10-168

High Torque Trim DI10-169
P1170 ..... DI10-169

Glow Plug Module Communication Fault DI10-170
P1676 ..... DI10-170
P1677 ..... DI10-170

Glow Plug Module Circuit Malfunction - Open DI10-171
P0674 ..... DI10-171
P0675 ..... DI10-171
P0671 ..... DI10-171
P0672 ..... DI10-171
P0673 ..... DI10-171

Glow Plug Module Circuit Malfunction - Short DI10-172
P1674 ..... DI10-172
P1675 ..... DI10-172
P1671 ..... DI10-172
P1672 ..... DI10-172
P1673 ..... DI10-172

TCU Signal Fault DI10-173
P0700 ..... DI10-173

Air Conditioner Operating Circuit Fault DI10-174
P1540 ..... DI10-174
P1541 ..... DI10-174
P1542 ..... DI10-174

Excessive Water in Fuel Filter DI10-175
P1149 ..... DI10-175

Immobilizer Malfunction DI10-176
P1634 ..... DI10-176
P4335 ..... DI10-176
P1630 ..... DI10-176
P1631 ..... DI10-176
P1632 ..... DI10-176
P1633 ..... DI10-176
P0633 ..... DI10-176
P1636 ..... DI10-176

امداد خودرو فارما
تلفن شبانه روزی: ۰۲۱-۸۸۸۶۲۰۸۵
FarmaSOS.com

TROUBLE DIAGNOSIS PROCEDURES

HMF sensor Signal Fault (Electric Failure)

▶ Trouble Code and Symptom

Trouble Code		Symptom
P0102	Low Signal	MIL ON
P0103	High Signal	Not available EGR control(Air flow)
P0100	Supply Voltage	

▶ Diagnosis Procedures

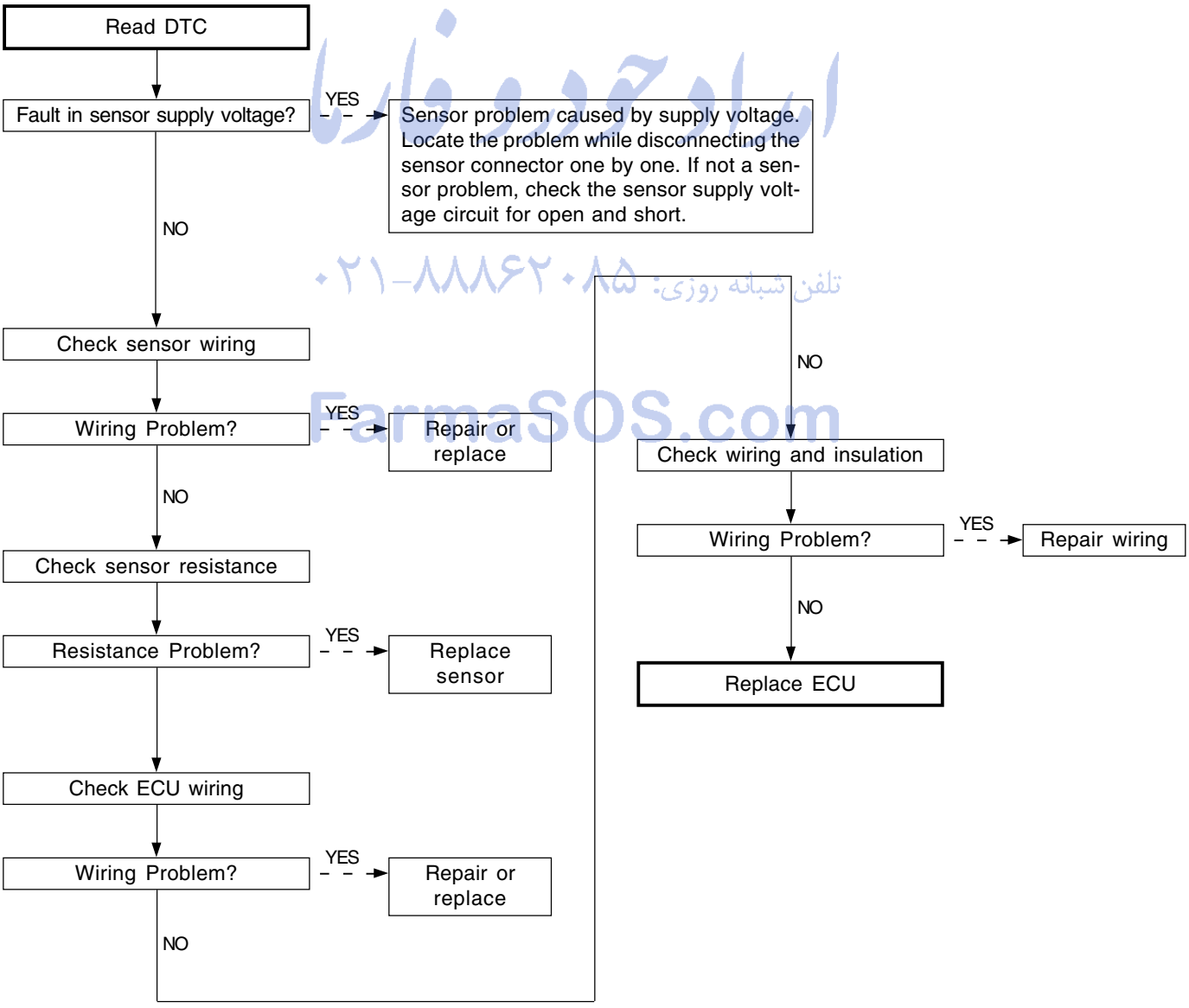

ایران خودرو فارما
تلفن شبانه روزی: ۰۲۱-۸۸۸۶۲۰۸۵
FarmaSOS.com

Cam Position Sensor (missing event)

▶ Trouble Code and Symptom

Trouble Code		Symptom
P0344	Cam Position Sensor Malfunction	

▶ Diagnosis Procedures

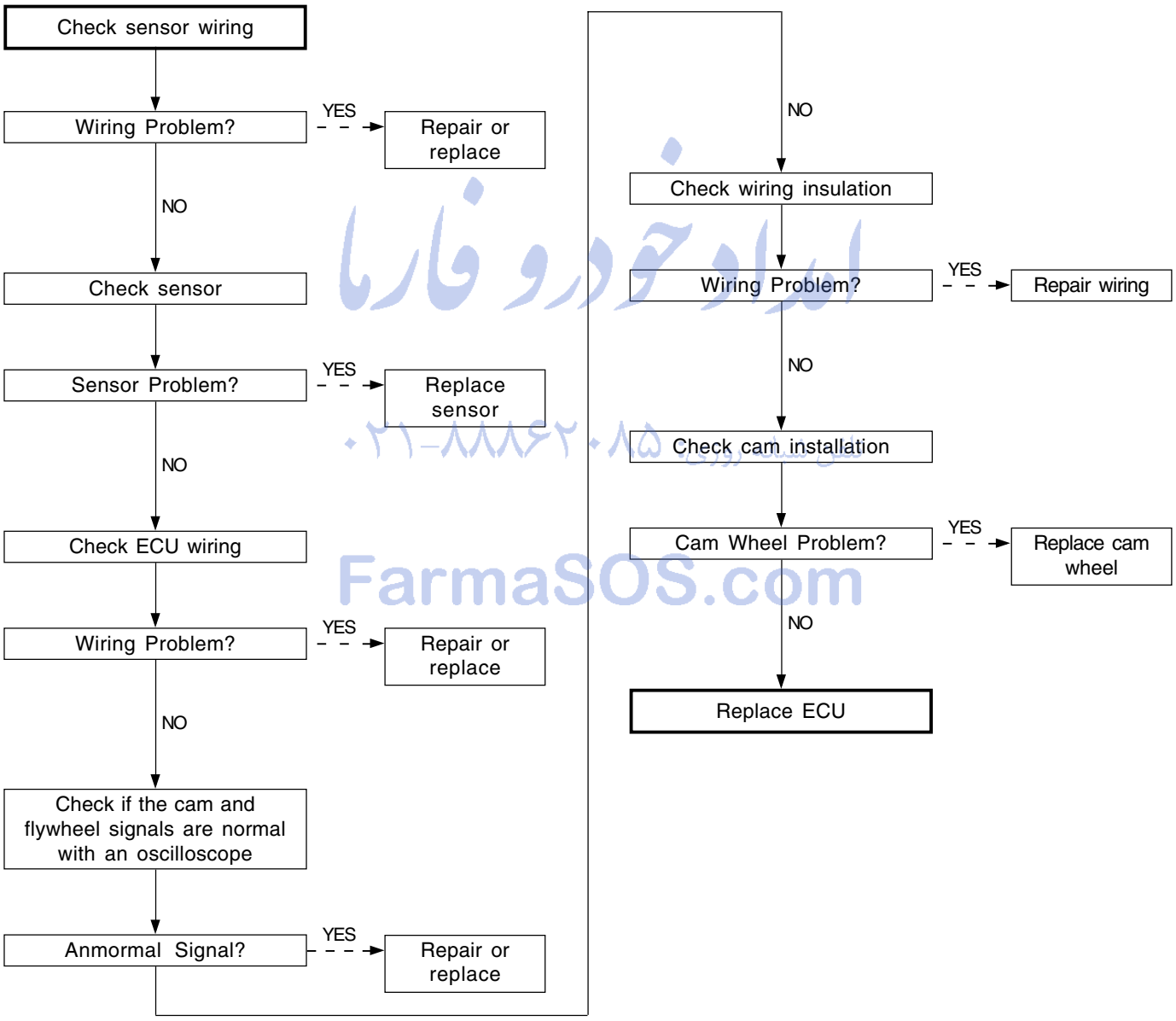

FarmaSOS.com

Cam Position Sensor Malfunction (Poor Synchronization of Crank and Cam)

▶ Trouble Code and Symptom

Trouble Code		Symptom
P0341	Cam Position Sensor Malfunction - Poor Synchronization	MIL ON

▶ Diagnosis Procedures

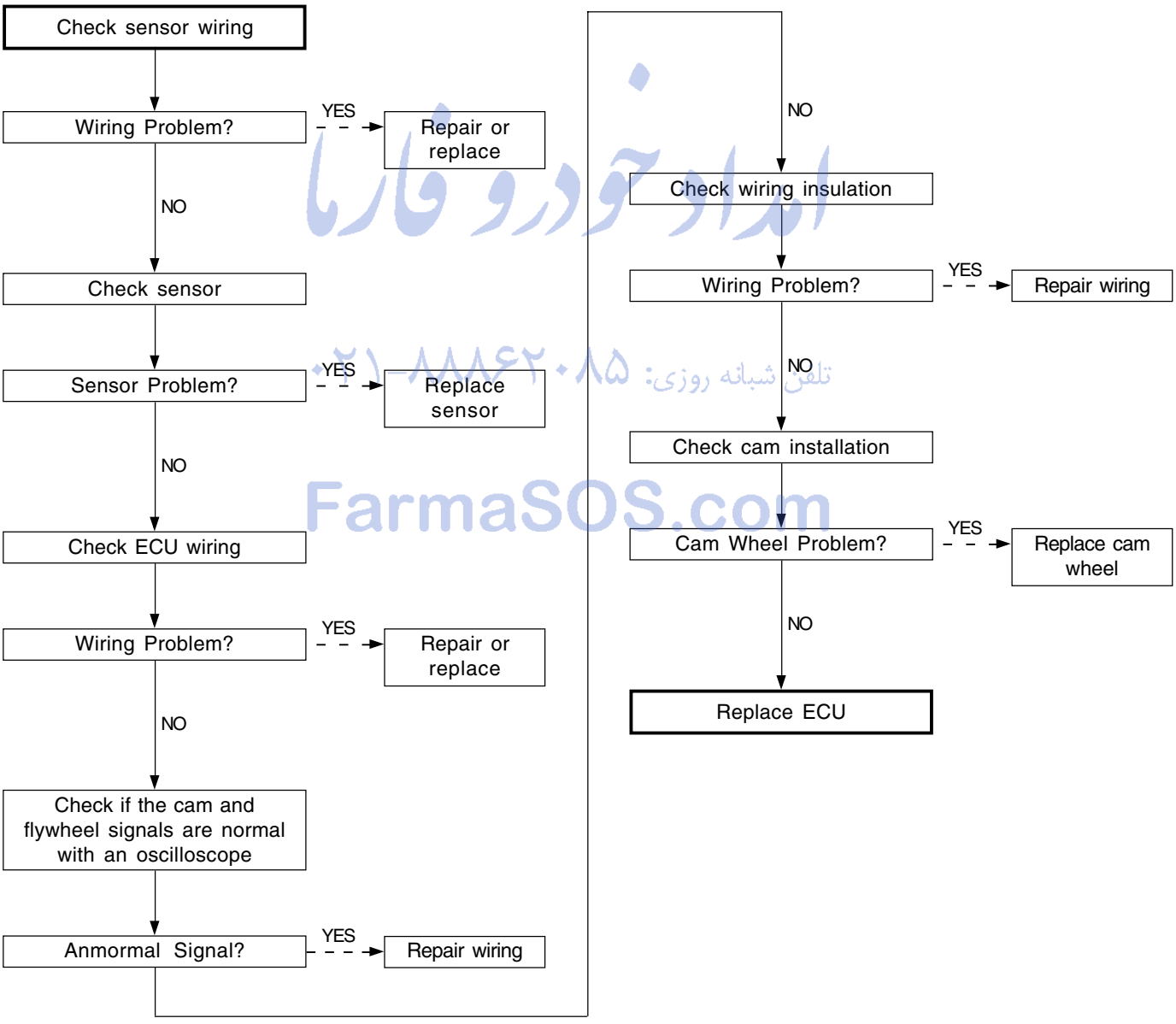

امداد خودرو فارما
تلفن شبانه روزی: ۰۲۱-۸۸۸۶۲۰۸۵
FarmaSOS.com

CHANGED BY	
EFFECTIVE DATE	
AFFECTED VIN	

Too Small Clearance of Crank Angle Sensor

▶ Trouble Code and Symptom

Trouble Code		Symptom
P0219	Too Small Clearance of Crank Angle Sensor	

▶ Diagnosis Procedures

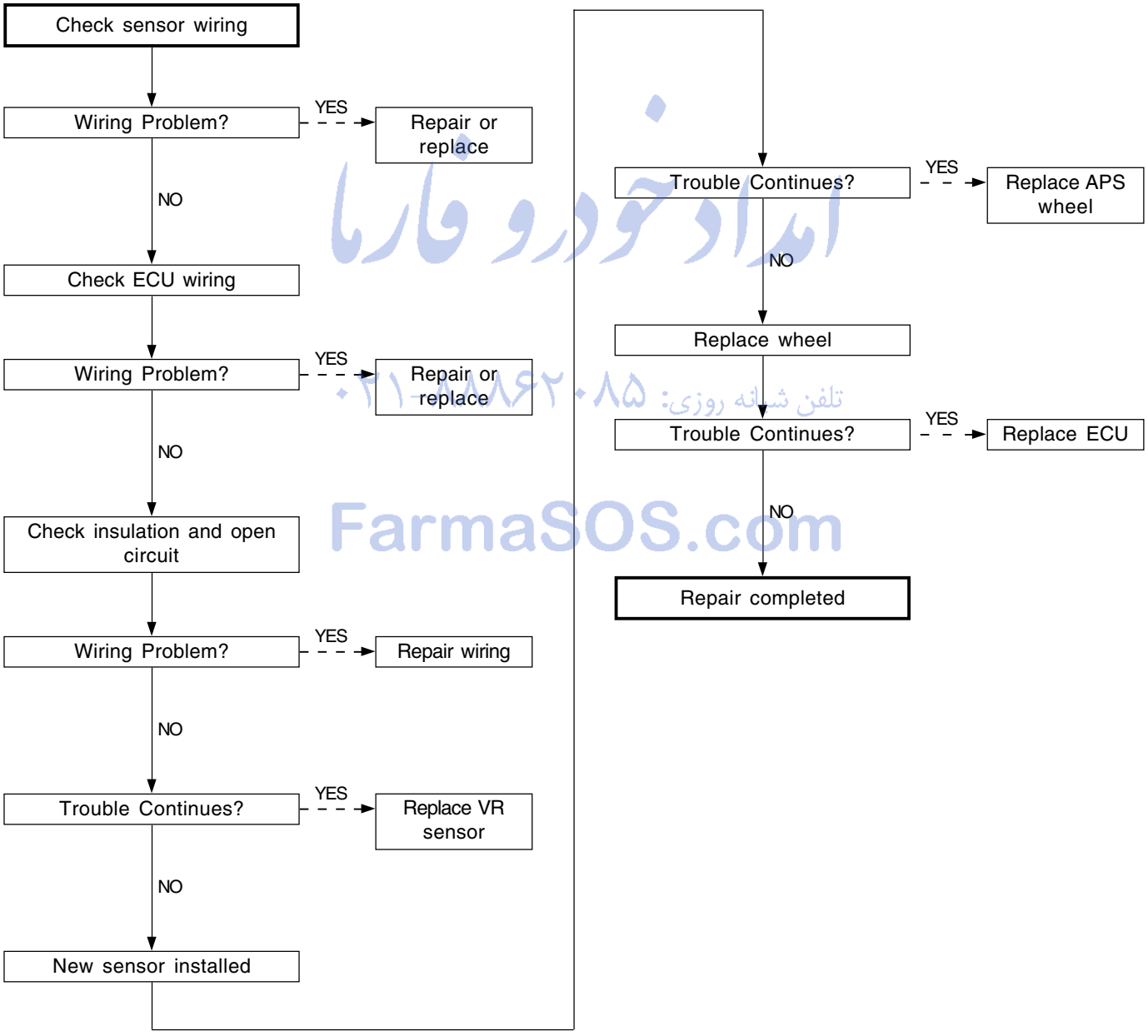

امداد خودرو فارما
تلفن شبانه روزی: ۰۲۱-۸۸۸۶۲۰۸۵
FarmaSOS.com

Too Large Clearance of Crank Angle Sensor

▶ Trouble Code and Symptom

Trouble Code		Symptom
P0336	Too Large Clearance of Crank Angle Sensor	MIL ON

▶ Diagnosis Procedures

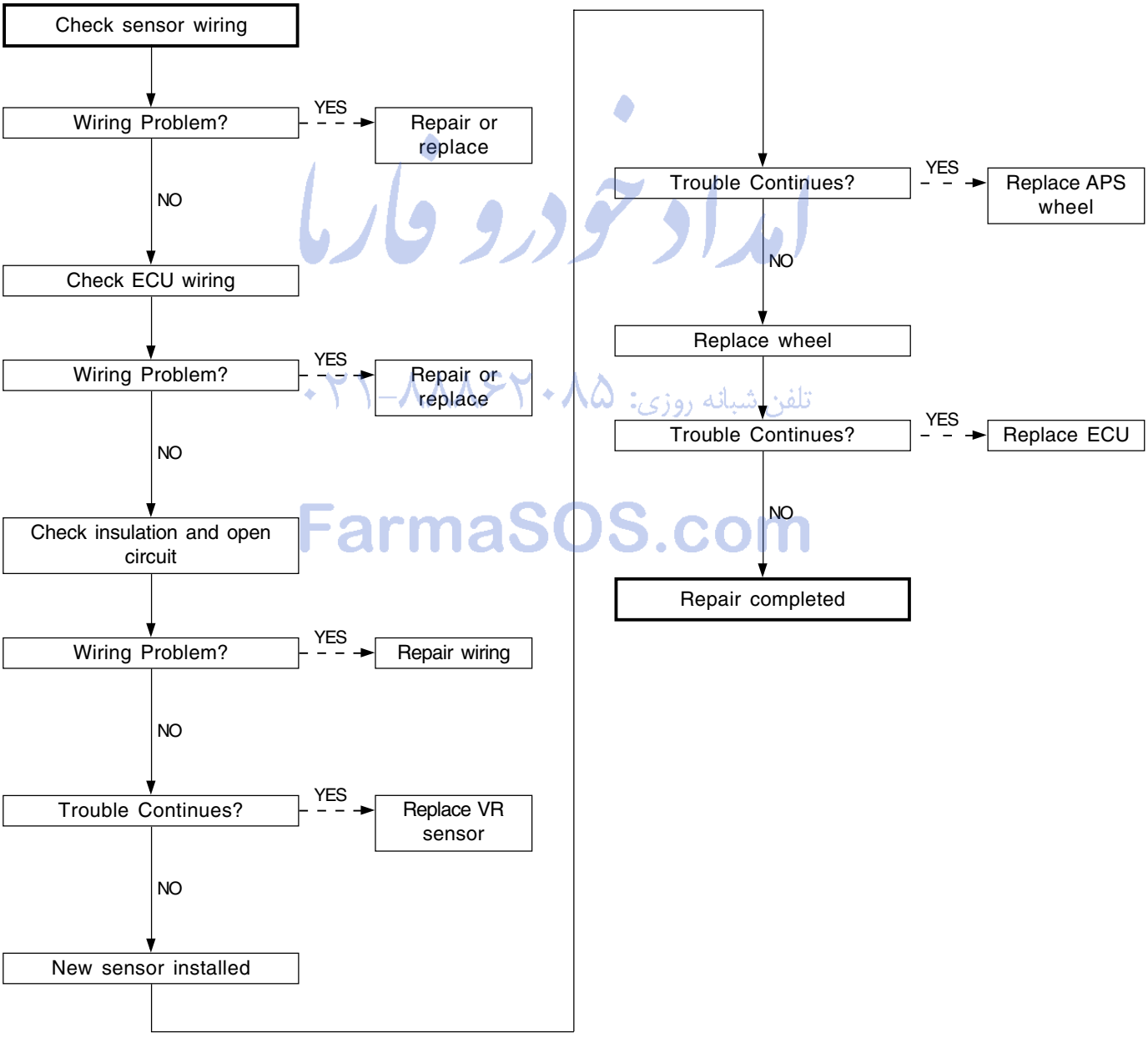

امداد خودرو فارما
تلفن پشتیبانه روزی: ۰۲۱-۸۸۶۲۰۸۵
FarmaSOS.com

Crank Angle Sensor Malfunction

▶ Trouble Code and Symptom

Trouble Code		Symptom
P0372	Crank Angle Sensor Malfunction 3	MIL ON

▶ Diagnosis Procedures

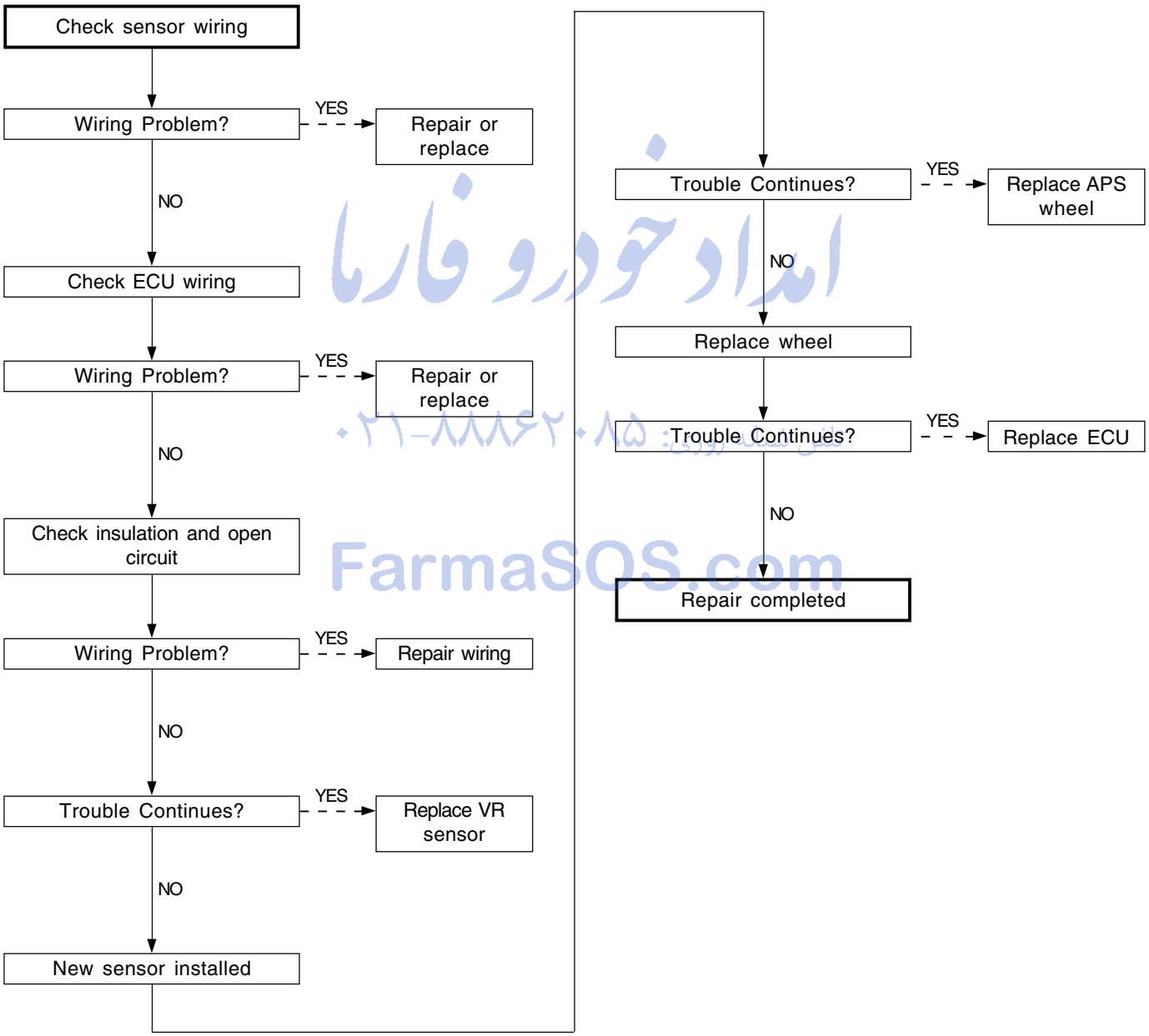

امداد خودرو فارما
۰۲۱-۸۸۸۶۲۰۸۵
FarmaSOS.com

Barometric Sensor Malfunction (Out of range, using strategy of restoring by MAP sensor)

▶ Trouble Code and Symptom

Trouble Code		Symptom
P1107	Low Signal	
P1108	High Signal	
P1105	Supply Voltage	

▶ Diagnosis Procedures

Replace ECU

امداد خودرو فارما
تلفن شبانه روزی: ۰۲۱-۸۸۸۶۲۰۸۵
FarmaSOS.com

CHANGED BY	
EFFECTIVE DATE	
AFFECTED VIN	

Battery Voltage Monitoring Signal Malfunction

▶ Trouble Code and Symptom

Trouble Code		Symptom
P0562	Low Signal	Not operatable.
P0563	High Signal	Injector #1 resistance fault. Use estimate resistance level.
P0560	Supply Voltage	Injector #2 resistance fault. Use estimate resistance level.
		Injector #4 resistance fault. Use estimate resistance level.
		Injector #5 resistance fault. Use estimate resistance level.
		Injector #3 resistance fault. Use estimate resistance level.
		Unable EGR control (Air Flow)
		Unable RPC trim problem detection
		Unable HP leak detection
		Unable accelerometer learing strategy
		MIL ON
		Operating limited rail pressure mode
		TBD

امداد خودرو فارما
۰۲۱-۸۸۸۶۲۰۸۵ تلفن شبانه روزی
FarmaSOS.com

▶ Diagnosis Procedures

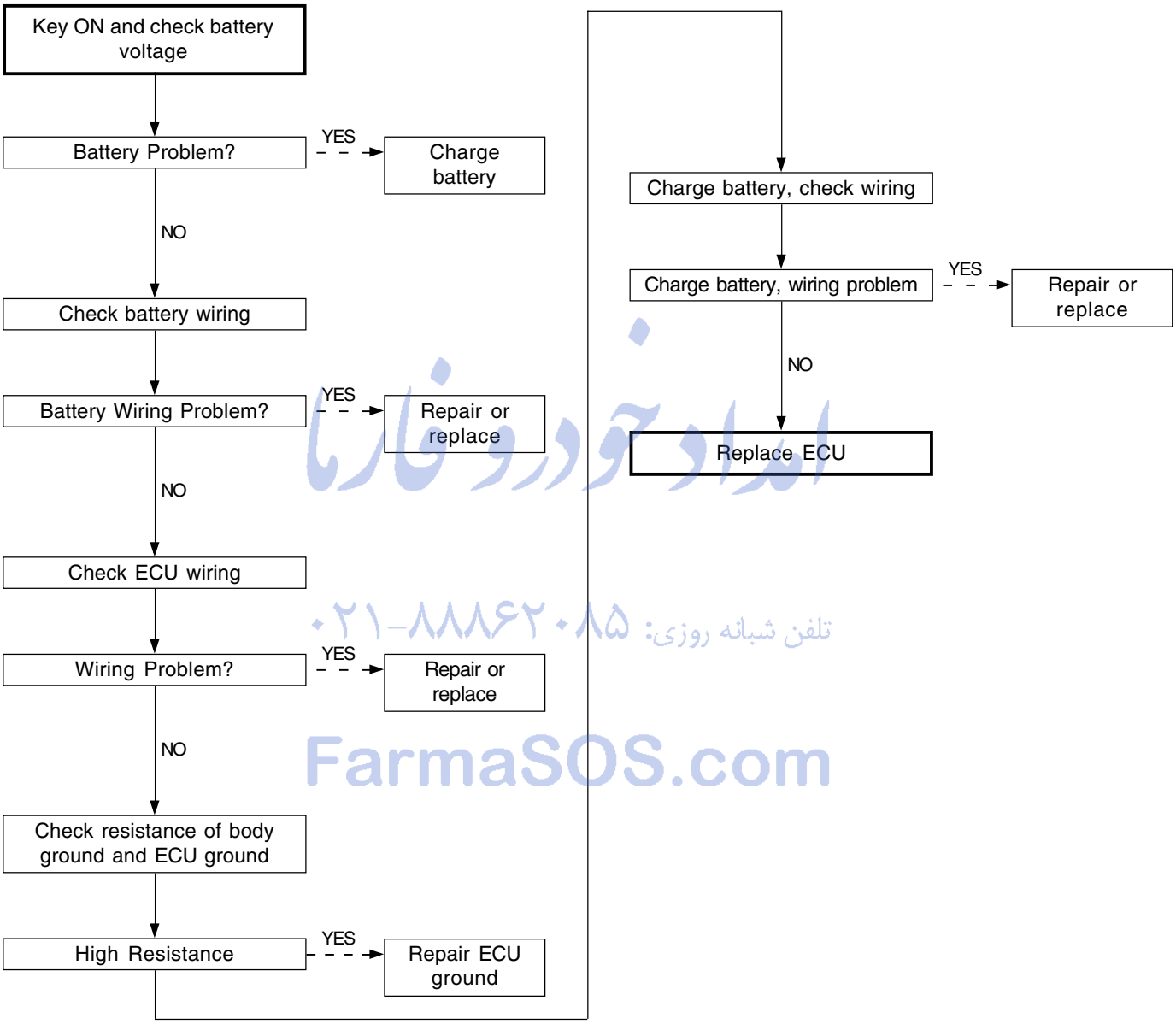

امداد خودرو فارنا
تلفن شبانه روزی: ۰۲۱-۸۸۸۶۲۰۸۵
FarmaSOS.com

CHANGED BY	
EFFECTIVE DATE	
AFFECTED VIN	

Booster Pressure Sensor Malfunction (Out of range with Key ON)

▶ Trouble Code and Symptom

Trouble Code		Symptom
P0109	Low	
P0106	High	Location demand=change the boost control to O.L. mode at f (boost demand, engine cycling speed)

▶ Diagnosis Procedures

1. Diagnosis Procedures (Boost Pressure)

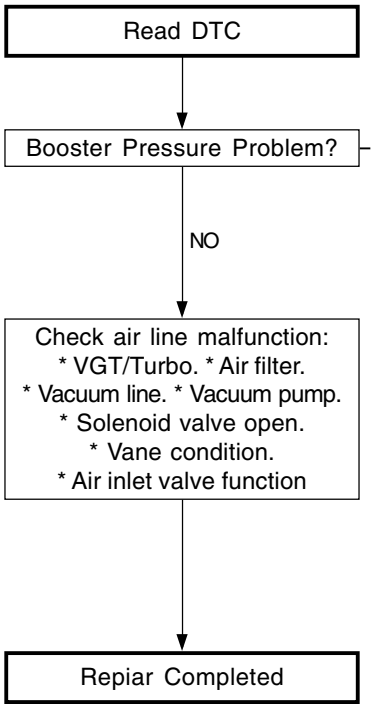

امداد خودرو فارس
تلفن شبانه روزی: ۰۲۱-۸۸۸۶۲۰۸۵
FarmaSOS.com

2. Diagnosis Procedure (Check sensor (1))

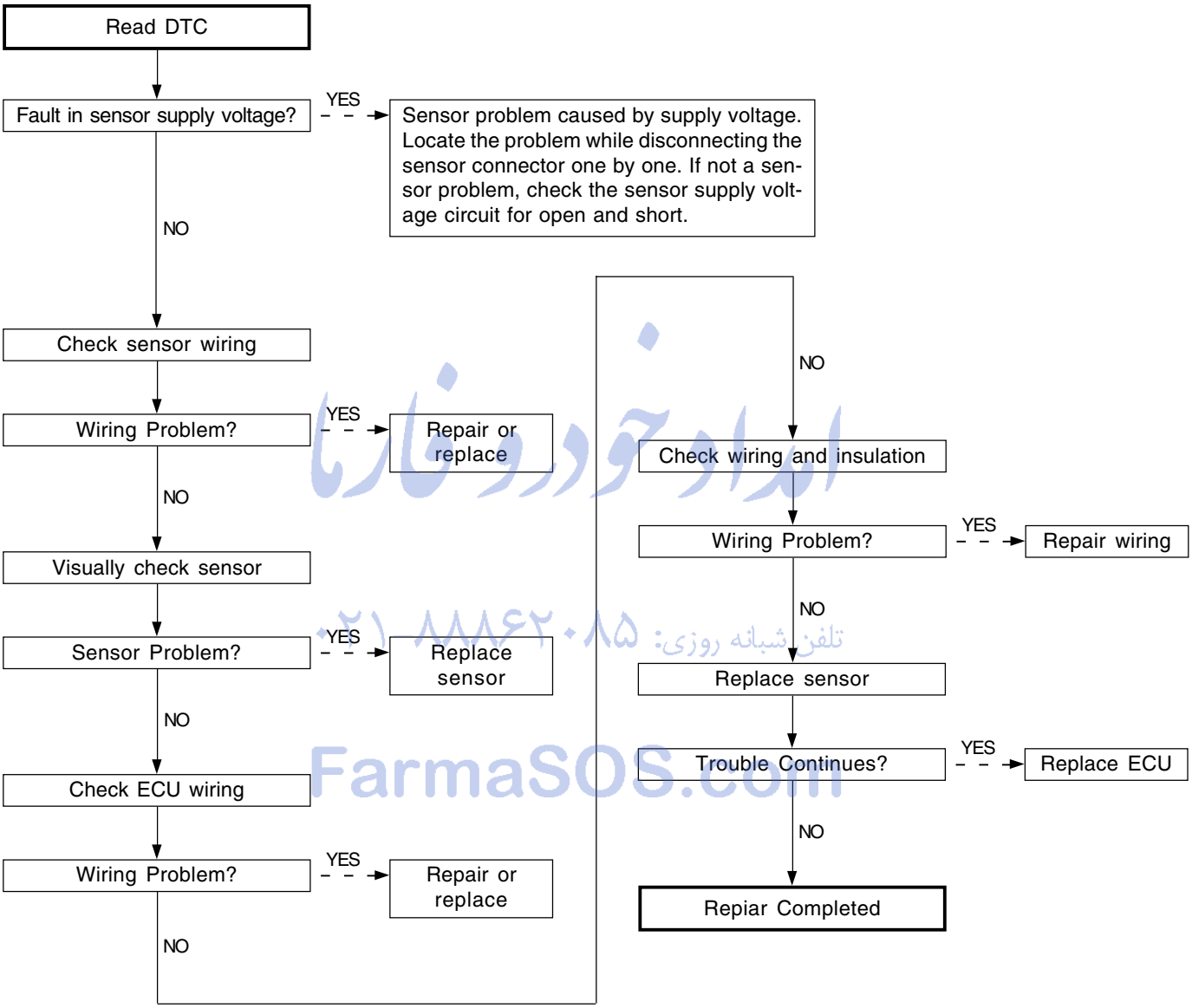

امداد خودرو فارنا
تلفن پشتیبانی روزی: ۰۲۱ ۸۸۸۶۲۰۸۵
FarmaSOS.com

Booster Pressure Sensor Malfunction (Out of range with Key ON)

▶ Trouble Code and Symptom

Trouble Code		Symptom
P0107	Low	
P0108	High	Location demand=change the boost control to O.L. mode at f (boost demand, engine cycling speed)
P0105	Supply Voltage	
P1106	GRAD	

▶ Diagnosis Procedures

1. Diagnosis Procedures (Boost Pressure)

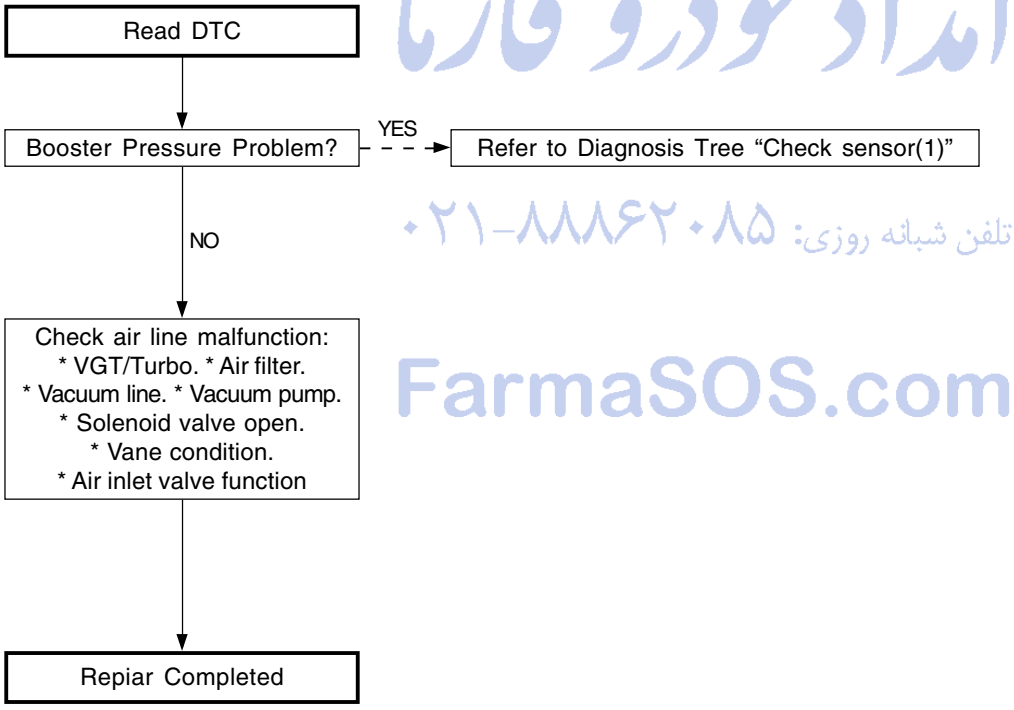

امداد خودرو فارما
تلفن شبانه روزی: ۰۲۱-۸۸۸۶۲۰۸۵
FarmaSOS.com

2. Diagnosis Procedures (check sensor (1))

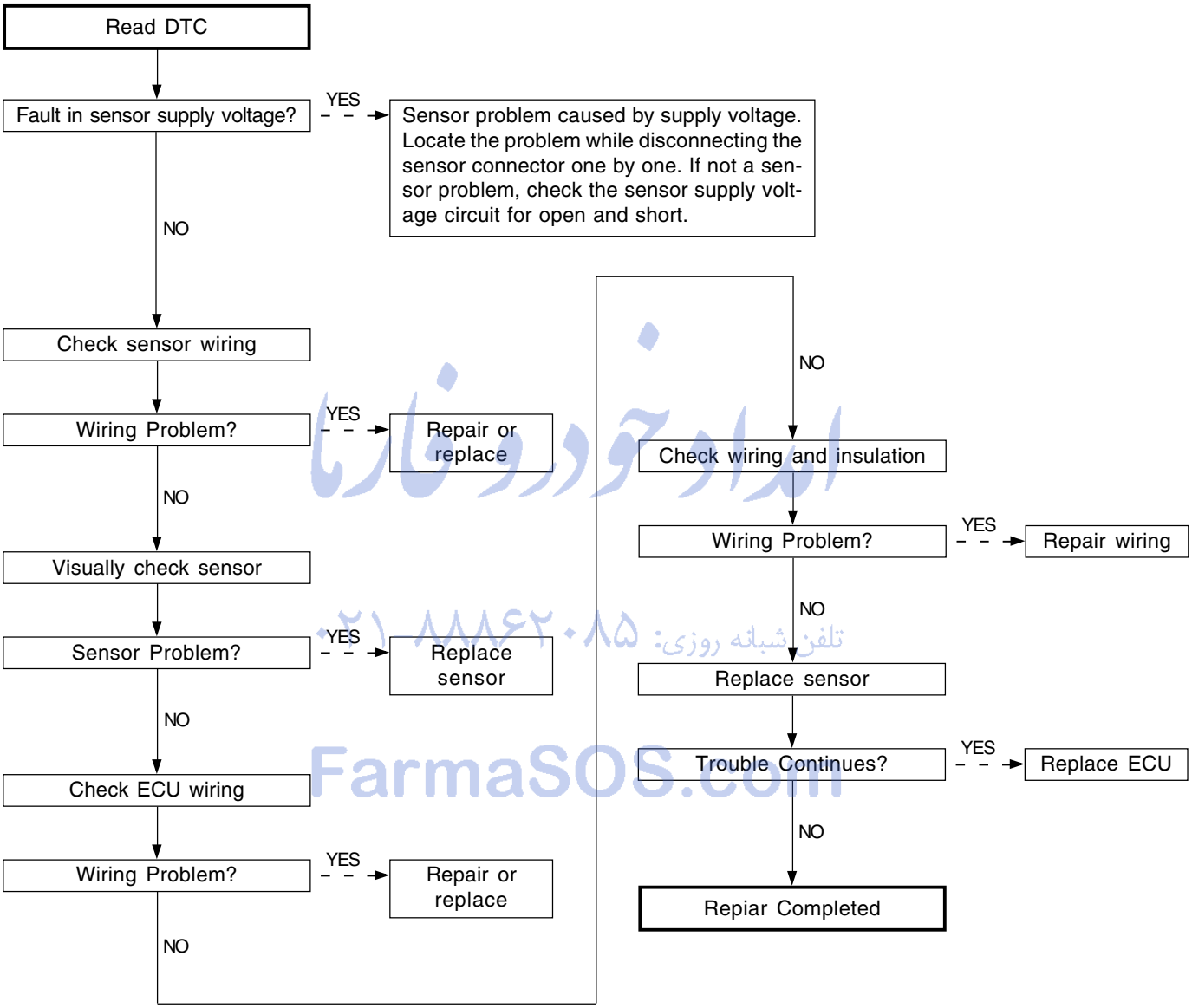

امداد خودرو فارنا
تلفن پشتیبانی روزی: ۰۲۱ ۸۸۸۶۲۰۸۵
FarmaSOS.com

CHANGED BY	
EFFECTIVE DATE	
AFFECTED VIN	

Booster Pressure Malfunction (Implausible Signal)

▶ Trouble Code and Symptom

Trouble Code		Symptom
P1109	Booster Pressure Sensor Malfunction	
		Location demand=change the boost control to O.L. mode at f (boost demand, engine cycling speed)

▶ Diagnosis Procedures

1. Diagnosis Procedures (Boost Pressure)

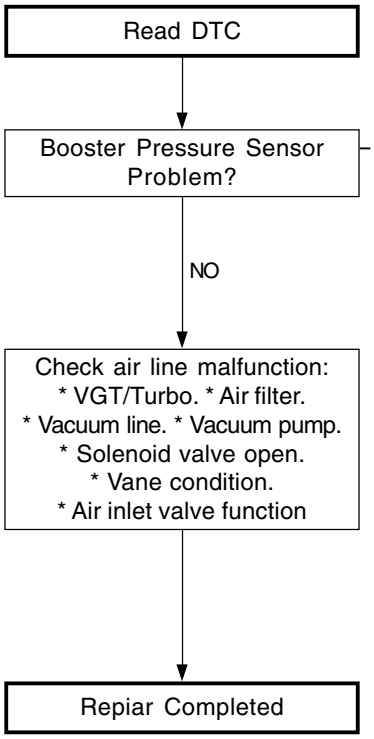

امداد خودرو فارما
تلفن شبانه روزی: ۰۲۱-۸۸۸۶۲۰۸۵
FarmaSOS.com

2. Diagnosis Procedures (check sensor (1))

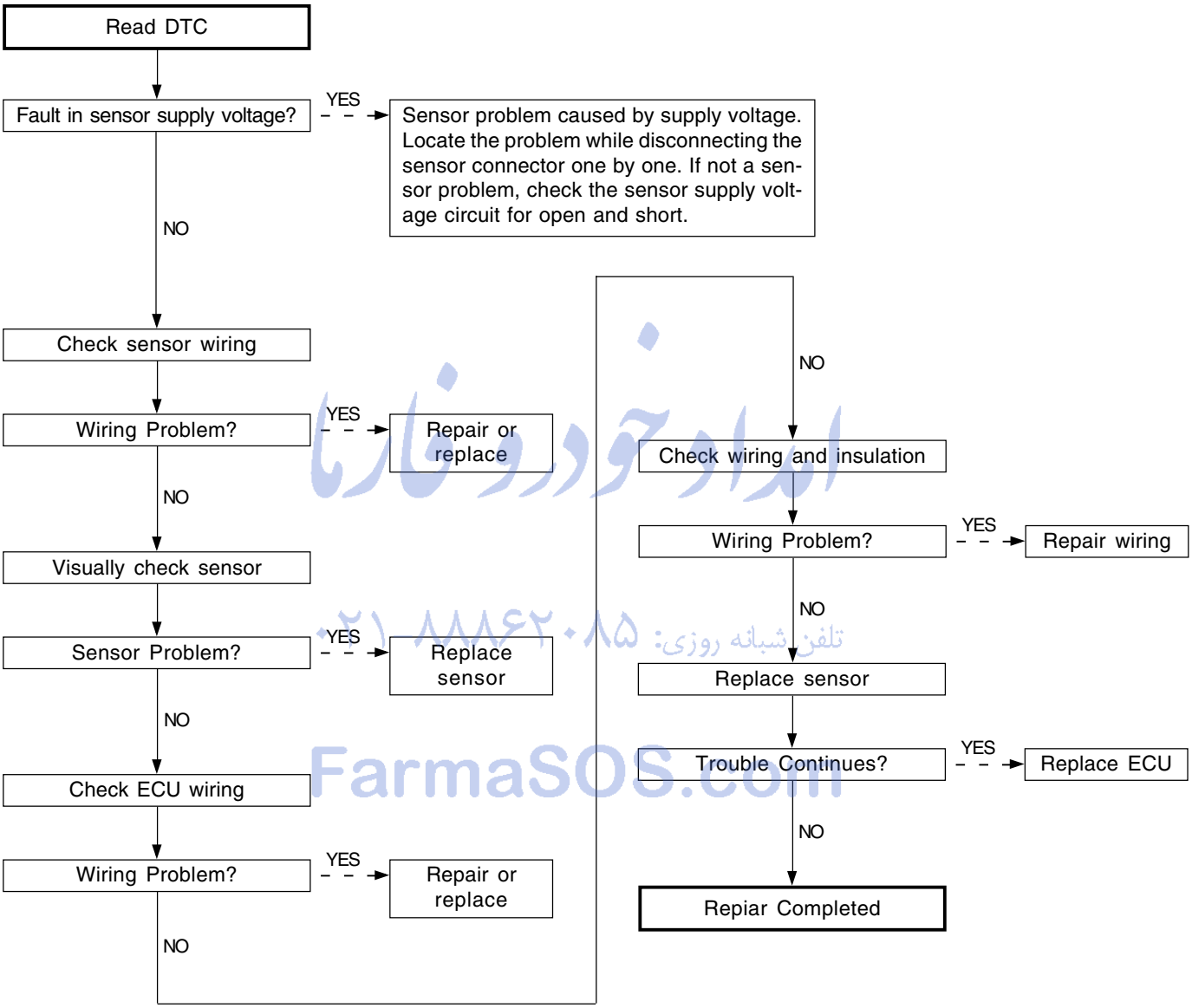

امداد خودرو فارنا
تلفن پشتیبانی روزی: ۰۲۱ ۸۸۸۶۲۰۸۵
FarmaSOS.com

CHANGED BY	
EFFECTIVE DATE	
AFFECTED VIN	

Brake Pedal Switch Malfunction

▶ Trouble Code and Symptom

Trouble Code		Symptom
P0571	Brake Pedal Switch Malfunction	MIL ON
		Unable Cruise Control

▶ Diagnosis Procedures

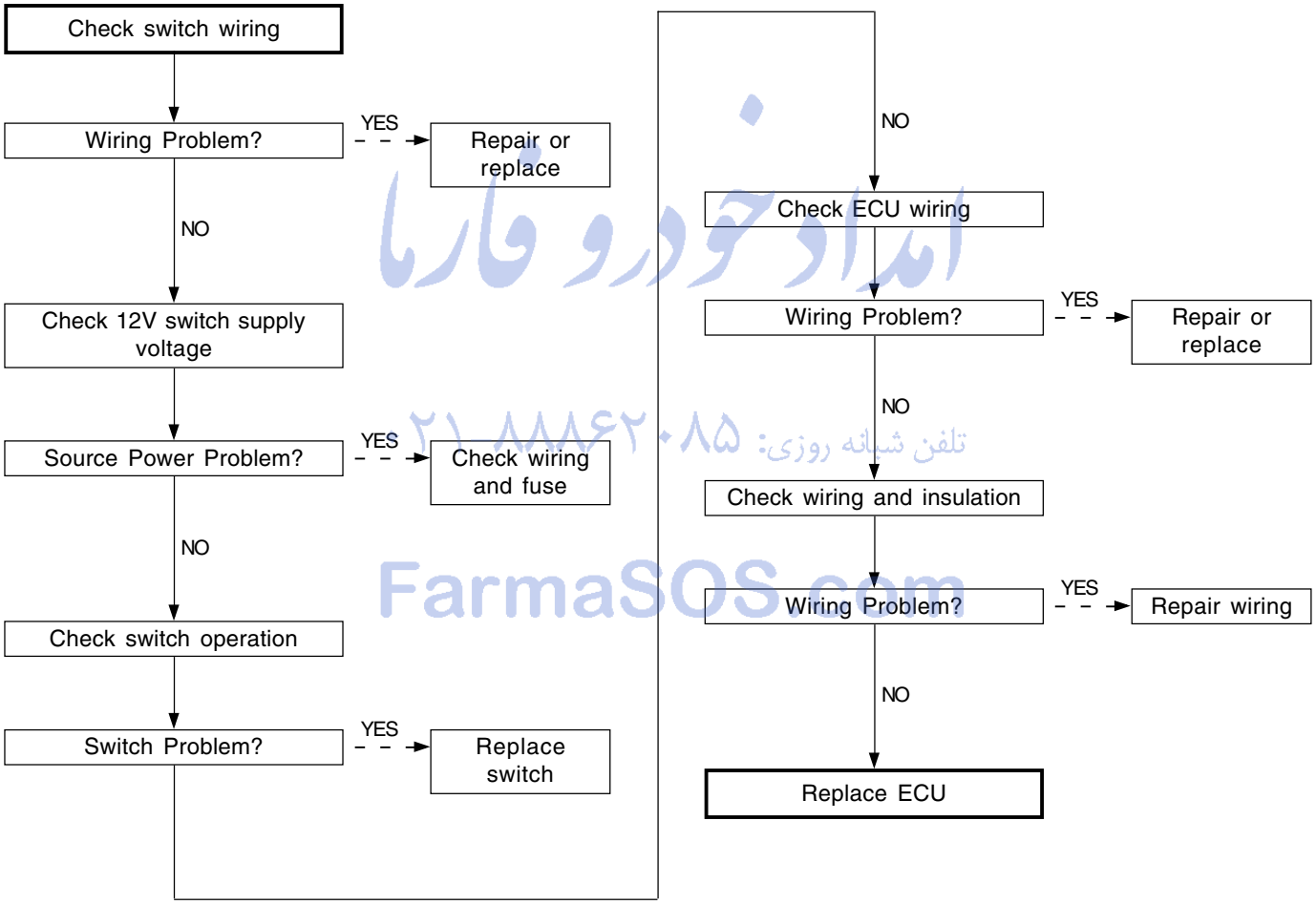

امداد خودرو فارما
تلفن شبانه روزی: ۰۸۵ ۸۸۸۶۲۰۸۵ ۲۱
FarmaSOS.com

Brake Lamp Signal Fault

▶ Trouble Code and Symptom

Trouble Code		Symptom
P1572	Brake Lamp Signal Fault	MIL ON
P1571	Brake Lamp Signal Fault	MIL ON

▶ Diagnosis Procedures

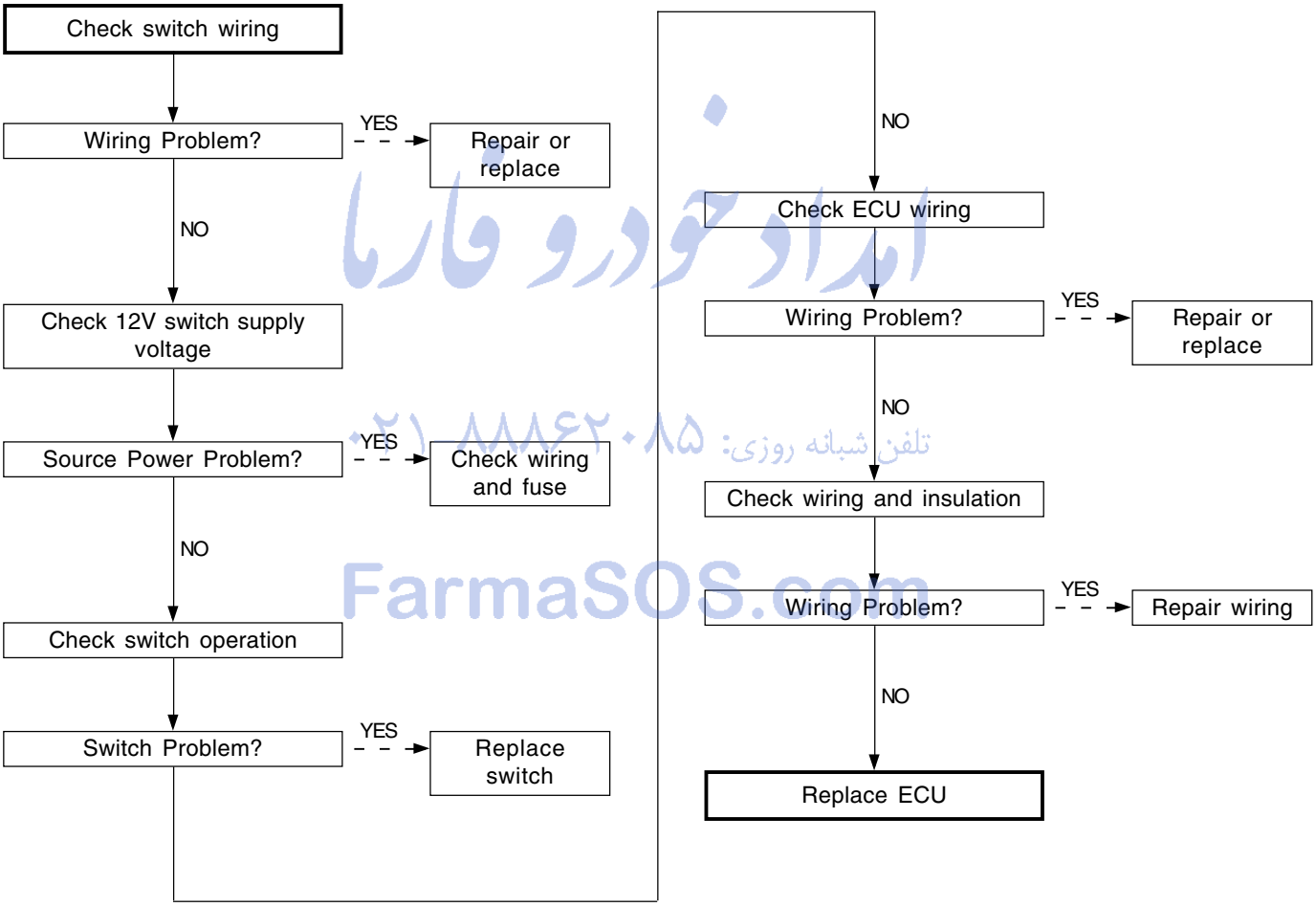

امداد خودرو فارما
تلفن شبانه روزی: ۰۲۱ ۸۸۸۶۲۰۸۵
FarmaSOS.com

CHANGED BY	
EFFECTIVE DATE	
AFFECTED VIN	

High Wiring Resistance (Injector #1)

▶ Trouble Code and Symptom

Trouble Code		Symptom
P1286	Low	Resistance of injector #1 fault. Use estimate resistance level.
P1287	High	MIL ON
		Unable Dynamic Leak of Injector #1
		Unable Accelerometer Learning Strategy

▶ Diagnosis Procedures

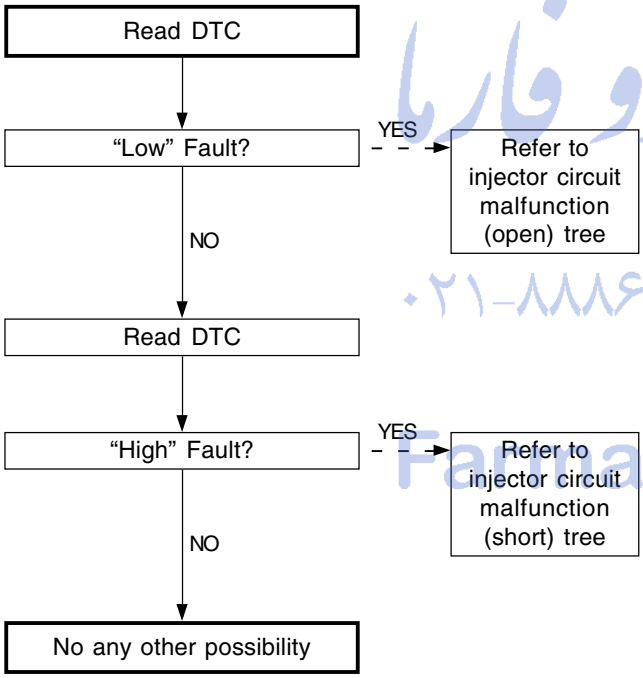

امداد خودرو فارما
تلفن شبانه روزی: ۰۲۱-۸۸۸۶۲۰۸۵
FarmaSOS.com

High Wiring Resistance (Injector #2)

▶ Trouble Code and Symptom

Trouble Code		Symptom
P1288	Low	Resistance of injector #2 fault. Use estimate resistance level.
P1289	High	MIL ON
		Unable Dynamic Leak of Injector #2
		Unable Accelerometer Learning Strategy

▶ Diagnosis Procedures

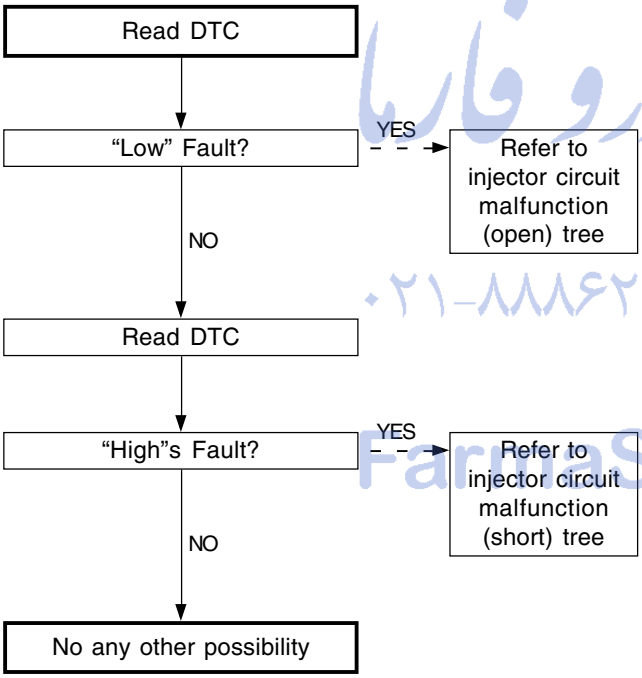

امداد خودرو فارما
تلفن شبانه روزی: ۰۲۱-۸۸۸۶۲۰۸۵
FarmaSOS.com

High Wiring Resistance (Injector #3)

▶ Trouble Code and Symptom

Trouble Code		Symptom
P1292	Low	Resistance of injector #4 fault. Use estimate resistance level.
P1293	High	MIL ON
		Unable Dynamic Leak of Injector #4
		Unable Accelerometer Learning Strategy

▶ Diagnosis Procedures

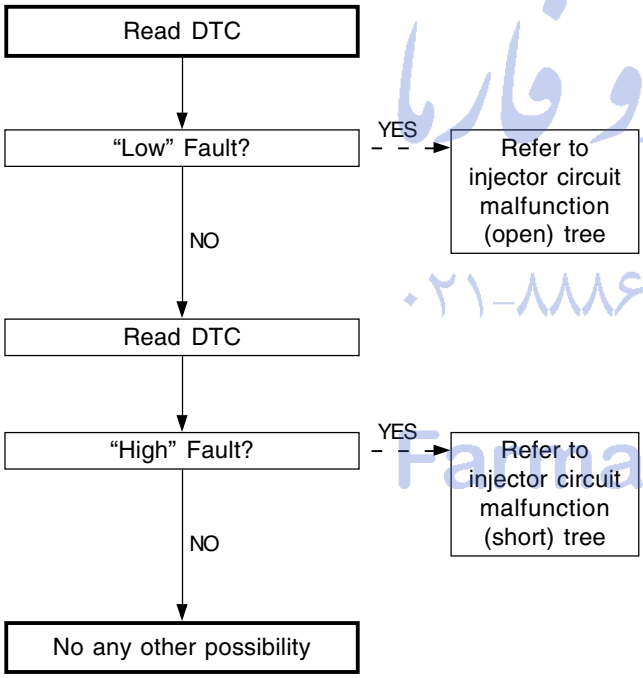

امداد خودرو فارما
تلفن شبانه روزی: ۰۲۱-۸۸۸۶۲۰۸۵
FarmaSOS.com

High Wiring Resistance (Injector #4)

▶ Trouble Code and Symptom

Trouble Code		Symptom
P1294	Low	Resistance of injector #5 fault. Use estimate resistance level.
P1295	High	MIL ON
		Unable Dynamic Leak of Injector #5
		Unable Accelerometer Learning Strategy

▶ Diagnosis Procedures

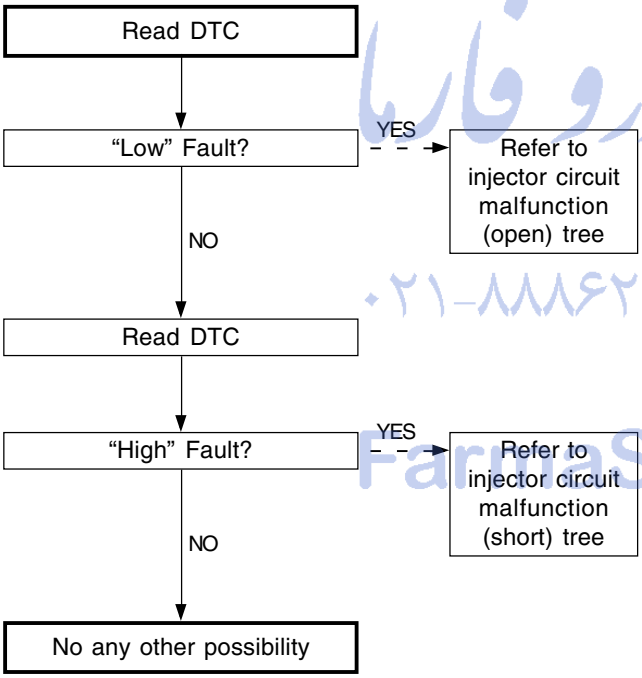

امداد خودرو فارما
تلفن شبانه روزی: ۰۲۱-۸۸۸۶۲۰۸۵
FarmaSOS.com

High Wiring Resistance (Injector #5)

▶ Trouble Code and Symptom

Trouble Code		Symptom
P1290	Low	Resistance of injector #3 fault. Use estimate resistance level.
P1291	High	MIL ON
		Unable Dynamic Leak of Injector #3
		Unable Accelerometer Learning Strategy

▶ Diagnosis Procedures

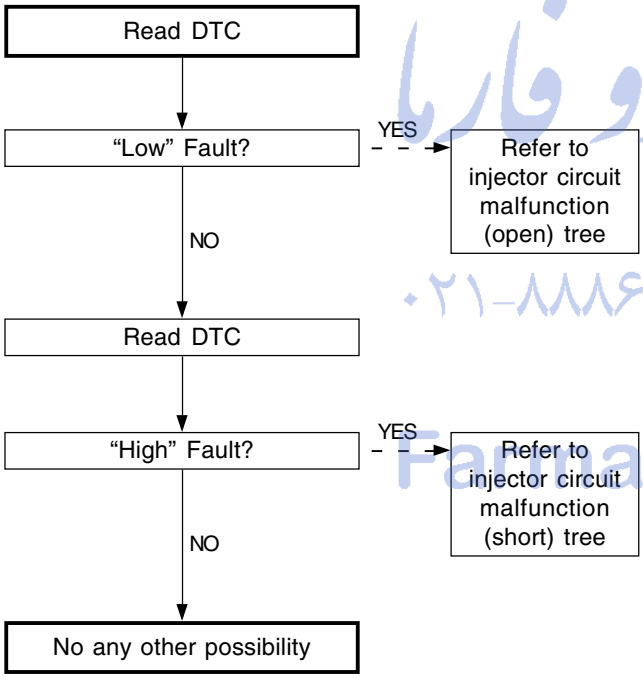

امداد خودرو فارما
تلفن شبانه روزی: ۰۲۱-۸۸۸۶۲۰۸۵
FarmaSOS.com

Clutch Switch Malfunction

▶ Trouble Code and Symptom

Trouble Code		Symptom
P0704	Clutch Switch Malfunction	

▶ Diagnosis Procedures

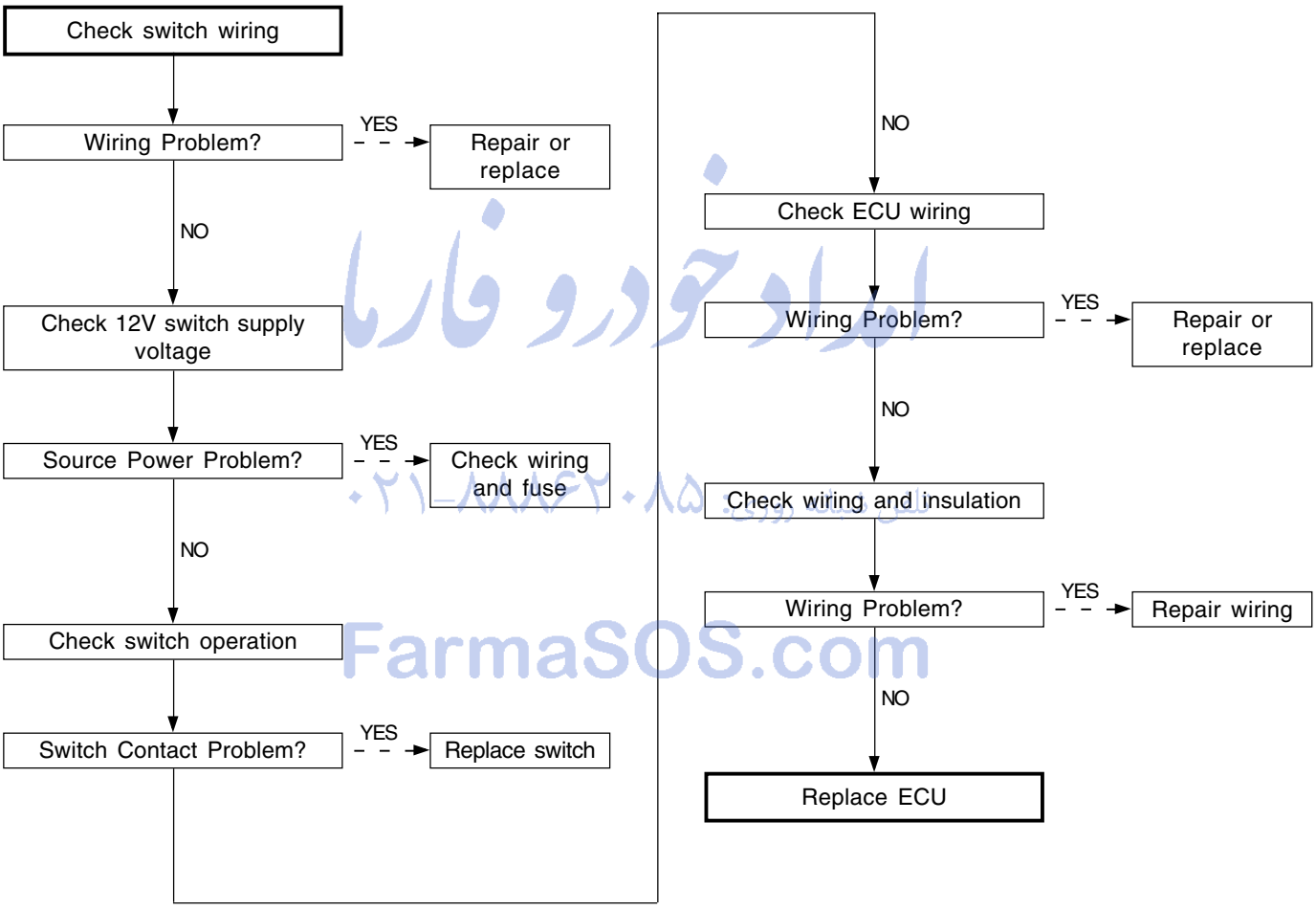

FarmaSOS.com

CHANGED BY	
EFFECTIVE DATE	
AFFECTED VIN	

Coolant Temperature Sensor Malfunction (Implausible Signal)

▶ Trouble Code and Symptom

Trouble Code		Symptom
P1115	Coolant Temperature Sensor Malfunction	Unable Air Conditioner Operation
		Below Limited Temperature of Engine Overheat Detection

▶ Diagnosis Procedures

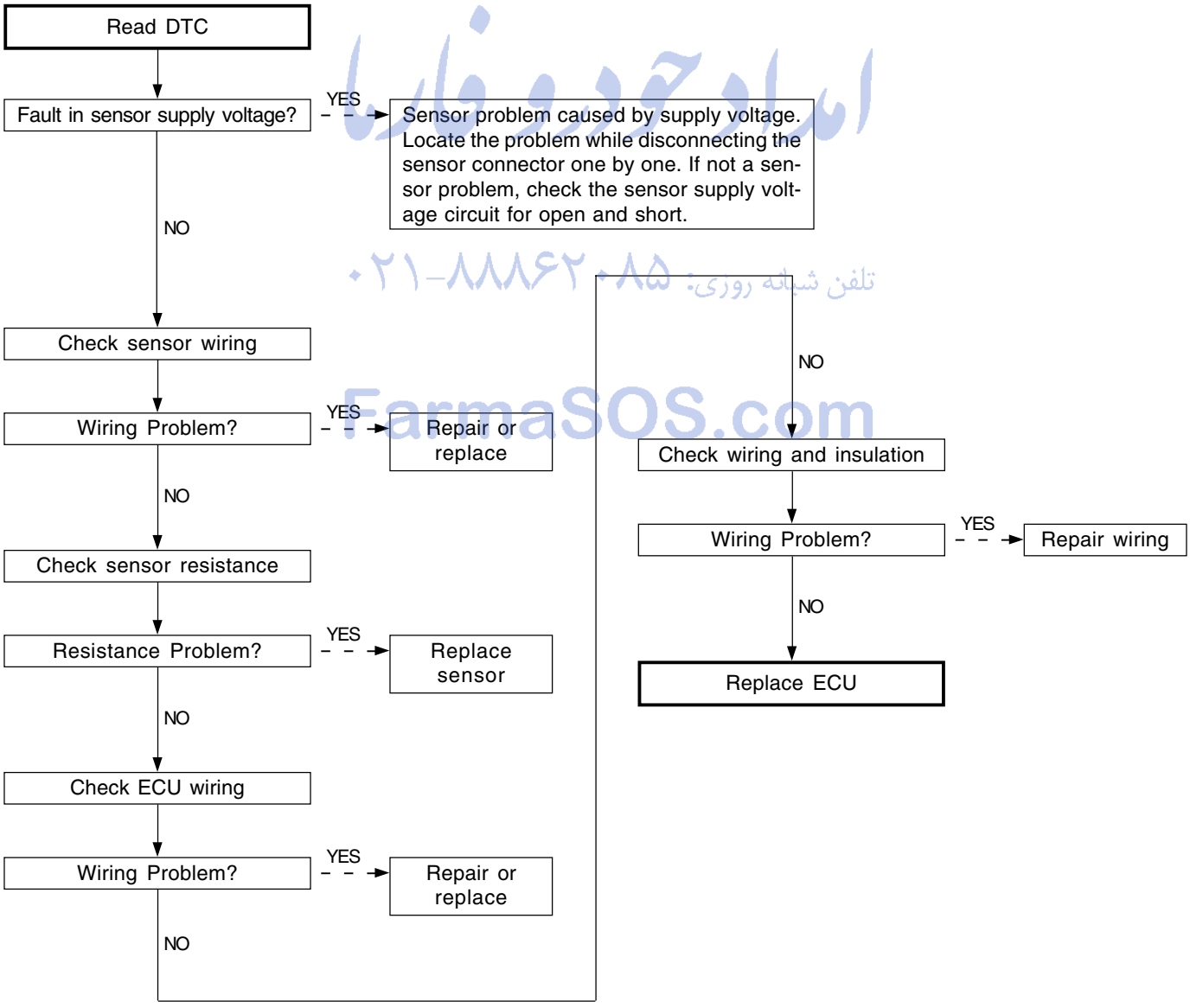

ایران خودرو وارنا
۰۲۱-۸۸۸۶۲۰۸۵ تلفن شبانه روزی:
FarmaSOS.com

Coolant Temperature Sensor Malfunction (Electric Fault)

▶ Trouble Code and Symptom

Trouble Code		Symptom
P0117	Low	Unable Air Conditioner Operation
P0118	High	Below Limited Temperature of Engine Overheat Detection
P0115	Supply Voltage	

▶ Diagnosis Procedures

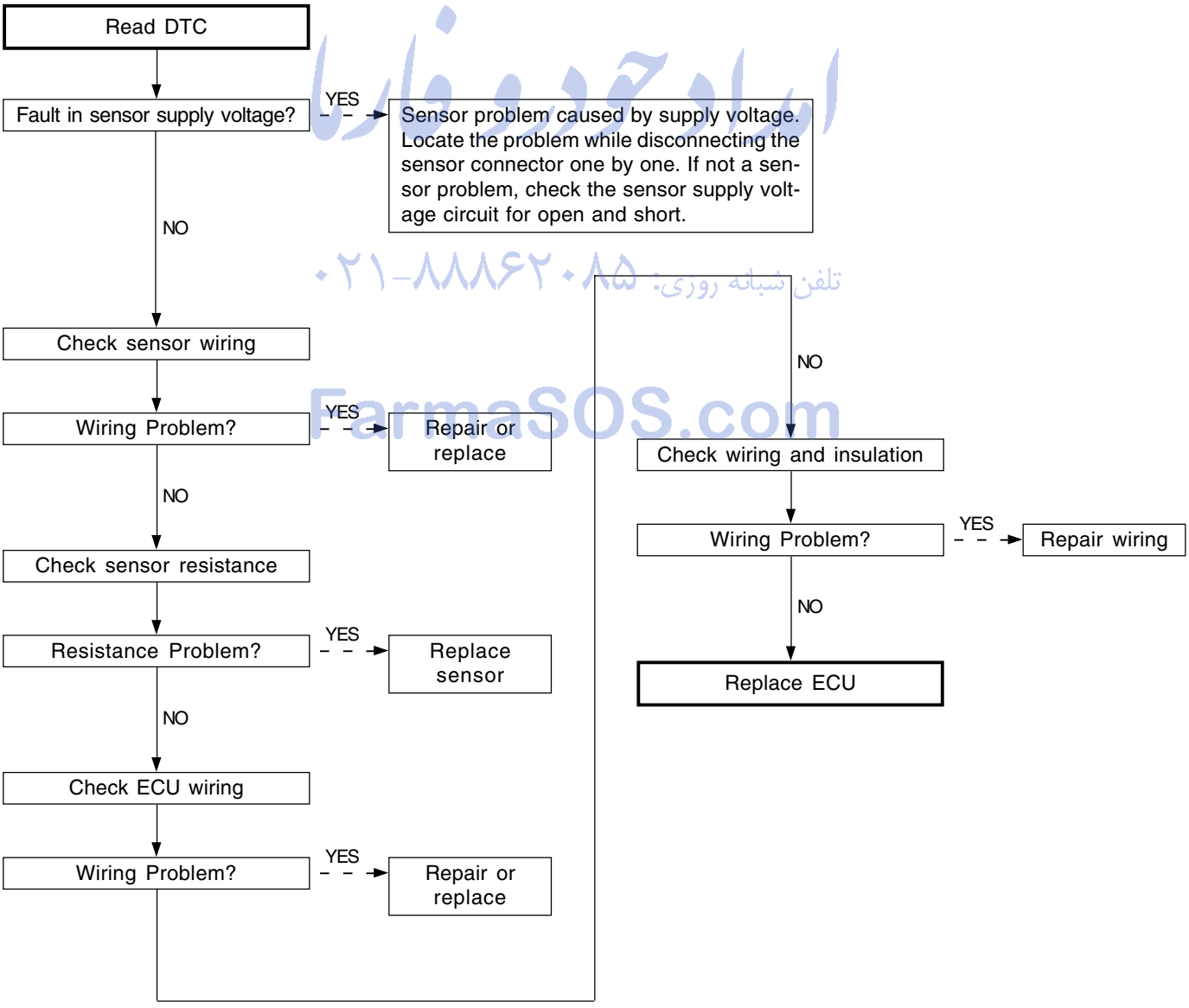

ایران خودرو فارما
۰۲۱-۸۸۸۶۲۰۸۵ تلفن شبانه روزی:
FarmaSOS.com

CHANGED BY	
EFFECTIVE DATE	
AFFECTED VIN	

Too Fast or Low Main Relay Operation

▶ Trouble Code and Symptom

Trouble Code		Symptom
P0685	Main Relay Malfunction	

▶ Diagnosis Procedures

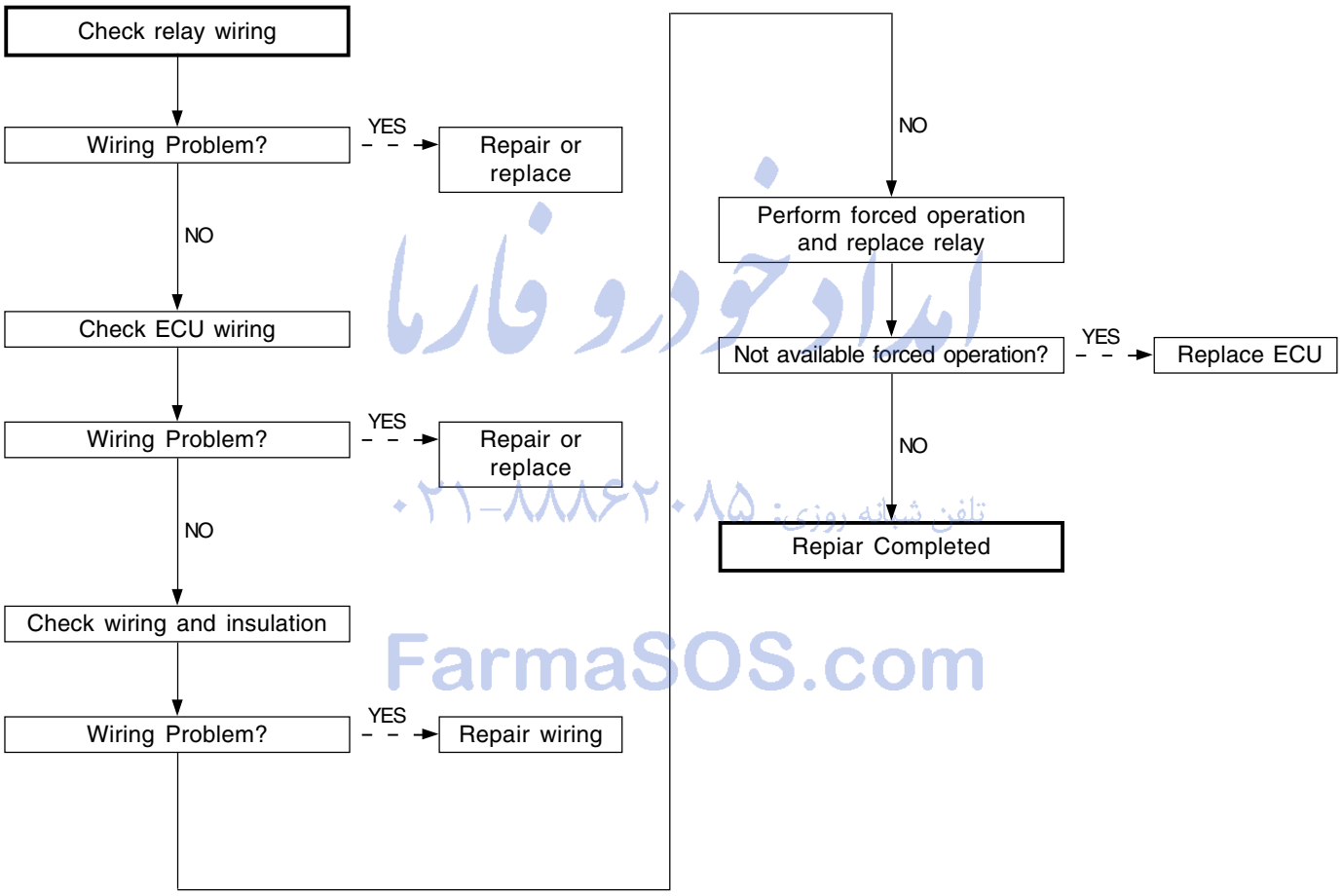

ایران خودرو فارما
تلفن شبانه روزی ۰۲۱-۸۸۸۶۲۰۸۵
FarmaSOS.com

EGR Actuator Malfunction

▶ Trouble Code and Symptom

Trouble Code		Symptom
P1405	EGR Vacuum Modulator - Short to GND	MIL ON
P1406	EGR Vacuum Modulator - Short to +Batt	Unable EGR Control (Air Flow)

▶ Diagnosis Procedures

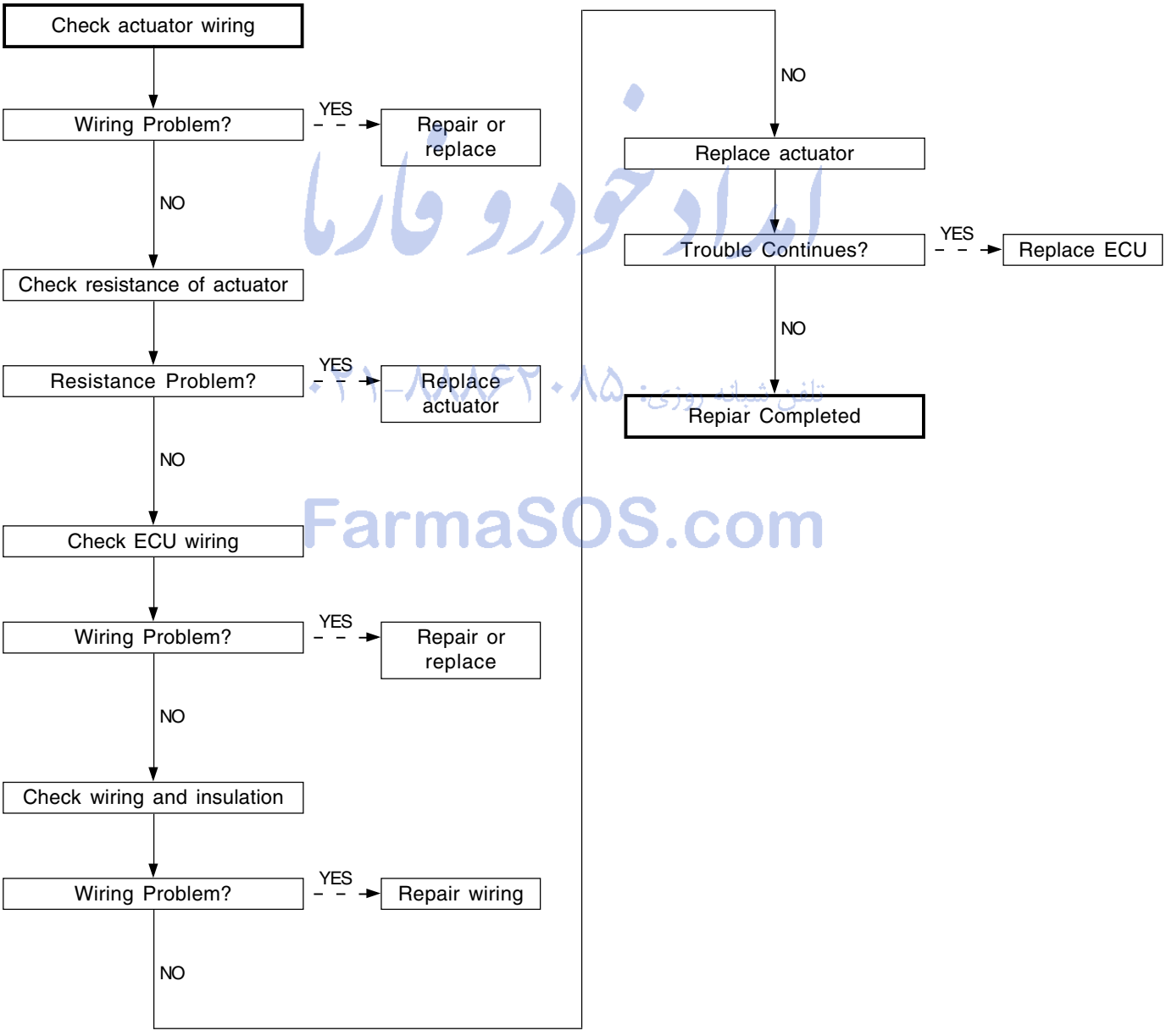

FarmaSOS.com

CHANGED BY	
EFFECTIVE DATE	
AFFECTED VIN	

Condenser Fan Driving Signal Fault (Type 1)

▶ Trouble Code and Symptom

Trouble Code		Symptom
P1480	Open Circuit	Unable Air Conditioner Operation
P1481	Short Circuit	MIL ON
P1482	Short to Ground	Below Limited Temperature of Engine Overheat Detection

▶ Diagnosis Procedures

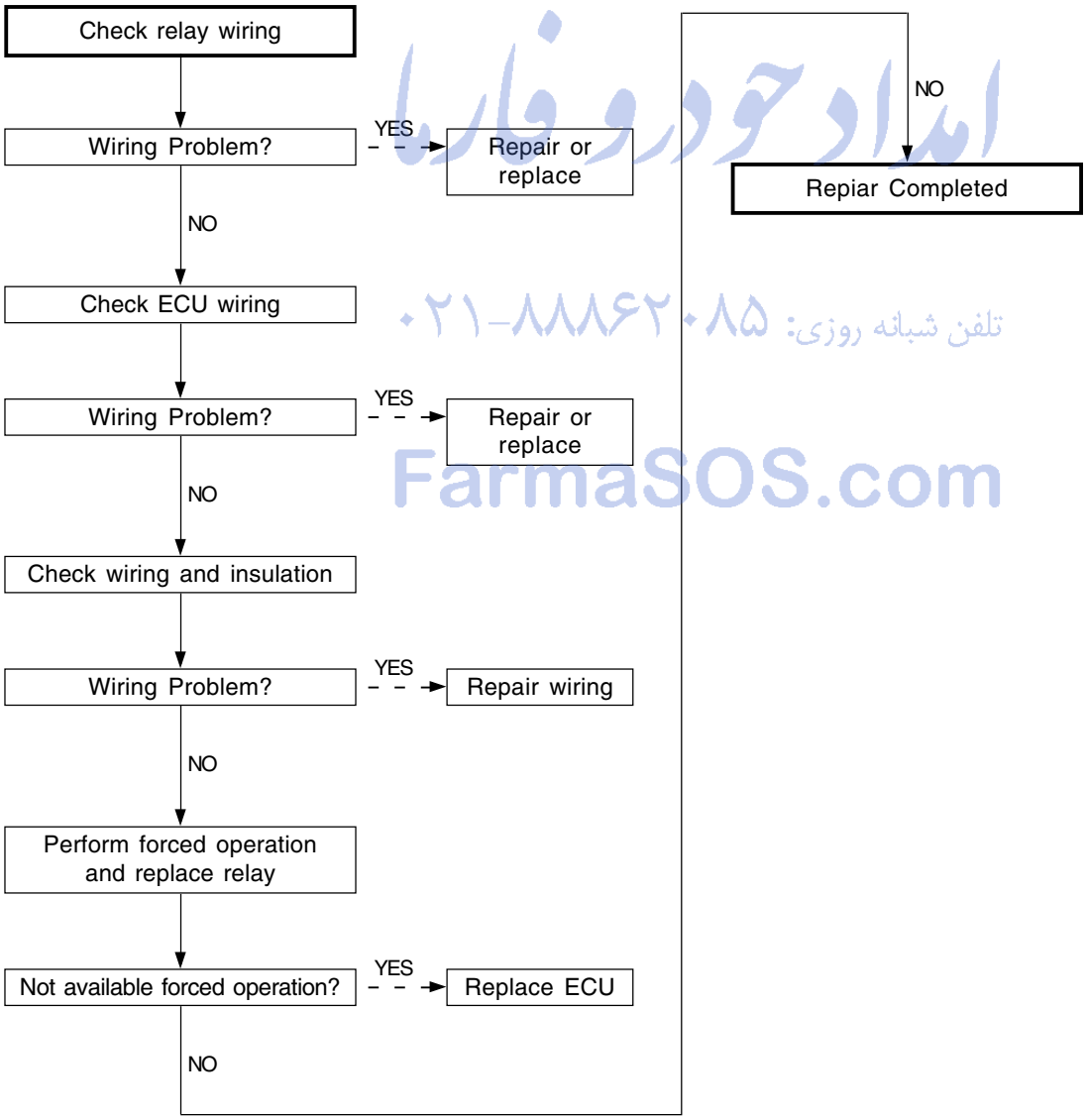

امداد خودرو فارما
تلفن شبانه روزی: ۰۲۱-۸۸۸۶۲۰۸۵
FarmaSOS.com

Condenser Fan Driving Signal Fault (Type 2)

▶ Trouble Code and Symptom

Trouble Code		Symptom
P1526	Open Circuit	Unable Air Conditioner Operation
P1527	Short Circuit	MIL ON
P1528	Short to Ground	Below Limited Temperature of Engine Overheat Detection

▶ Diagnosis Procedures

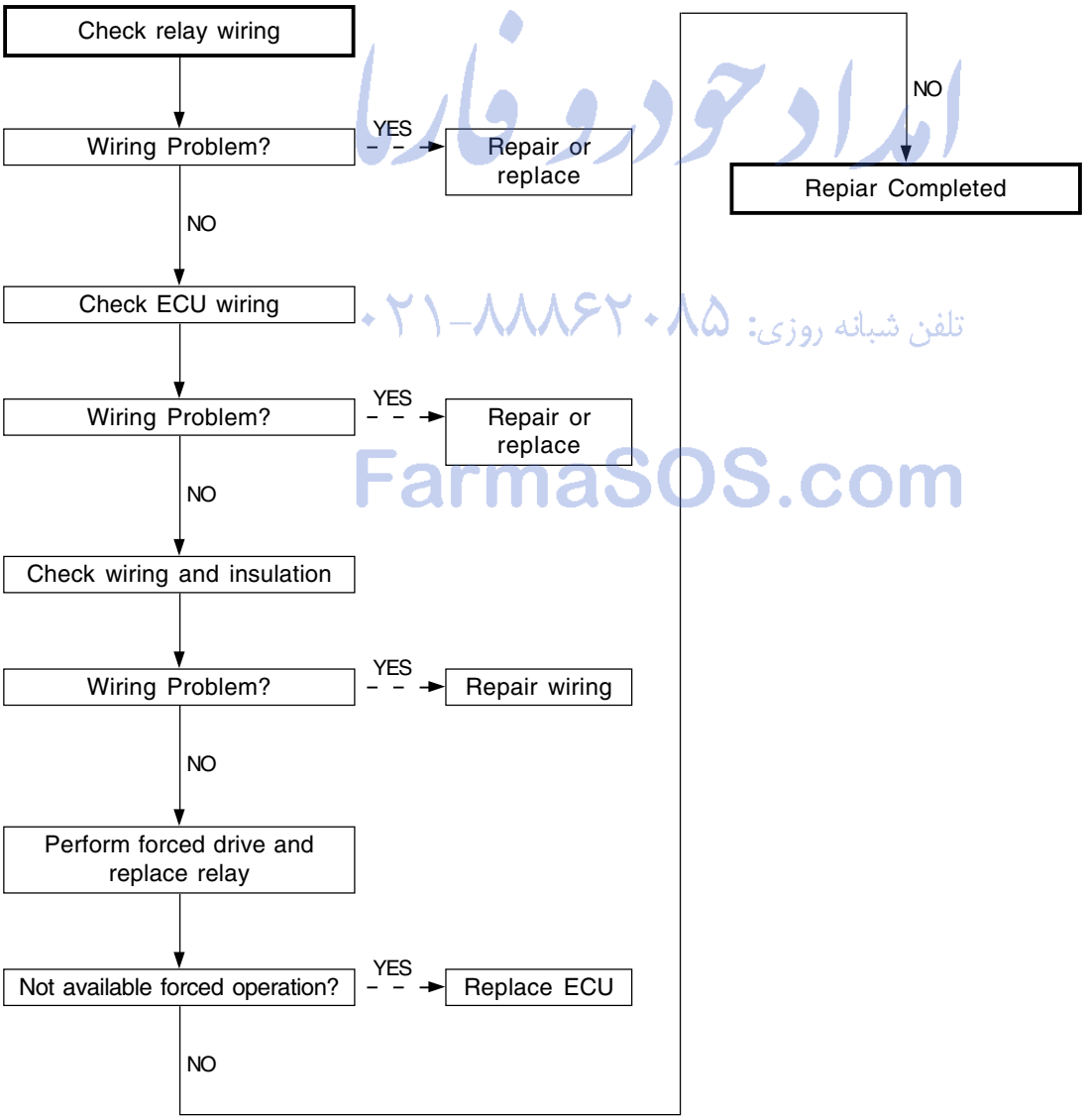

امداد خودرو فارما
تلفن شبانه روزی: ۰۲۱-۸۸۸۶۲۰۸۵
FarmaSOS.com

#1 Accelerometer Malfunction (Idling Signal/Too Small Noise Ratio)

▶ Trouble Code and Symptom

Trouble Code		Symptom
P0325	#1 Accelerometer (Knock Sensor) Malfunction	MIL ON
		Unable Accelerometer Learning Strategy

▶ Diagnosis Procedures

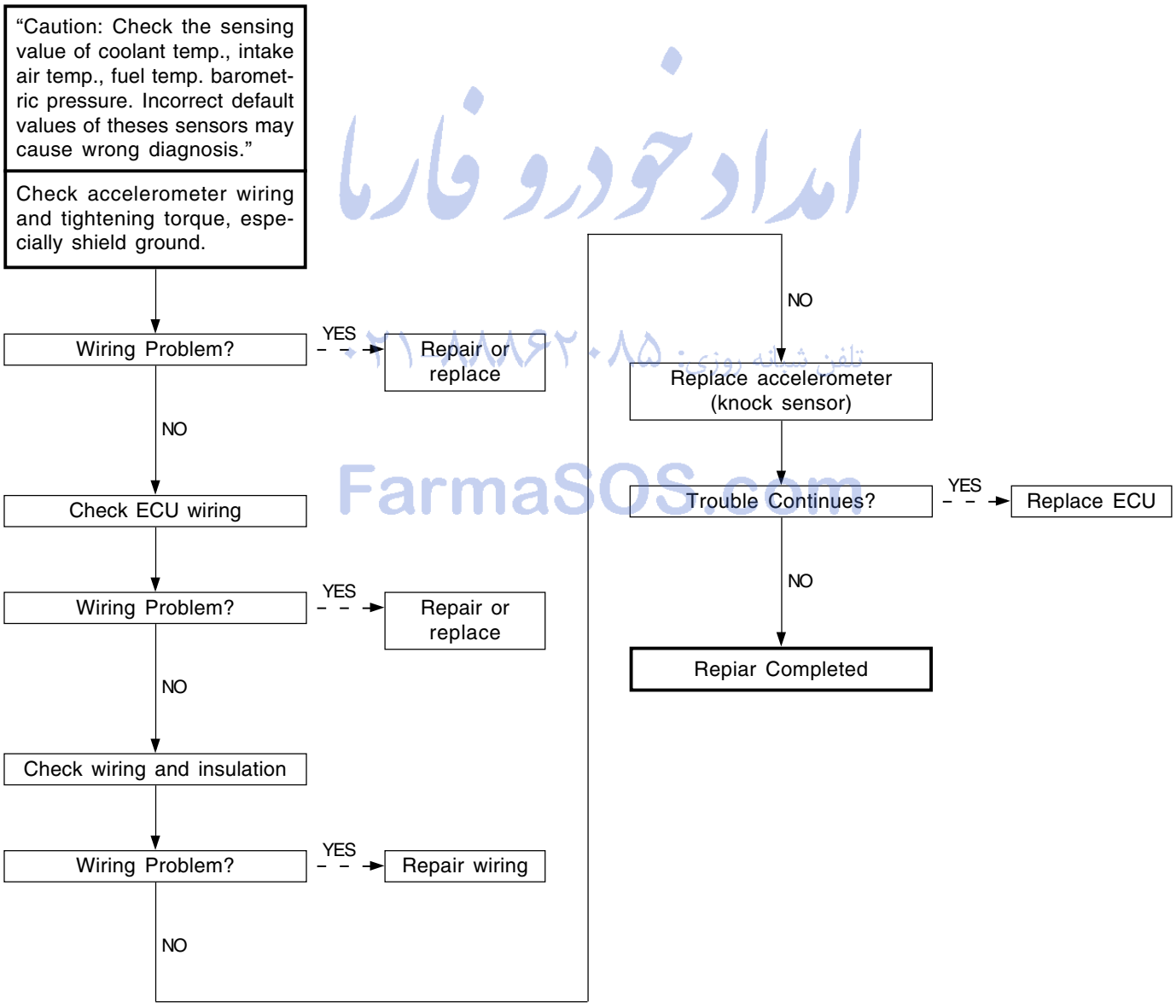

امداد خودرو فارما
FarmaSOS.com

#2 Accelerometer Malfunction (Idling Signal/Too Small Noise Ratio)

▶ Trouble Code and Symptom

Trouble Code		Symptom
P0330	#2 Accelerometer (Knock Sensor) Malfunction	MIL ON
		Unable Accelerometer Learning Strategy

▶ Diagnosis Procedures

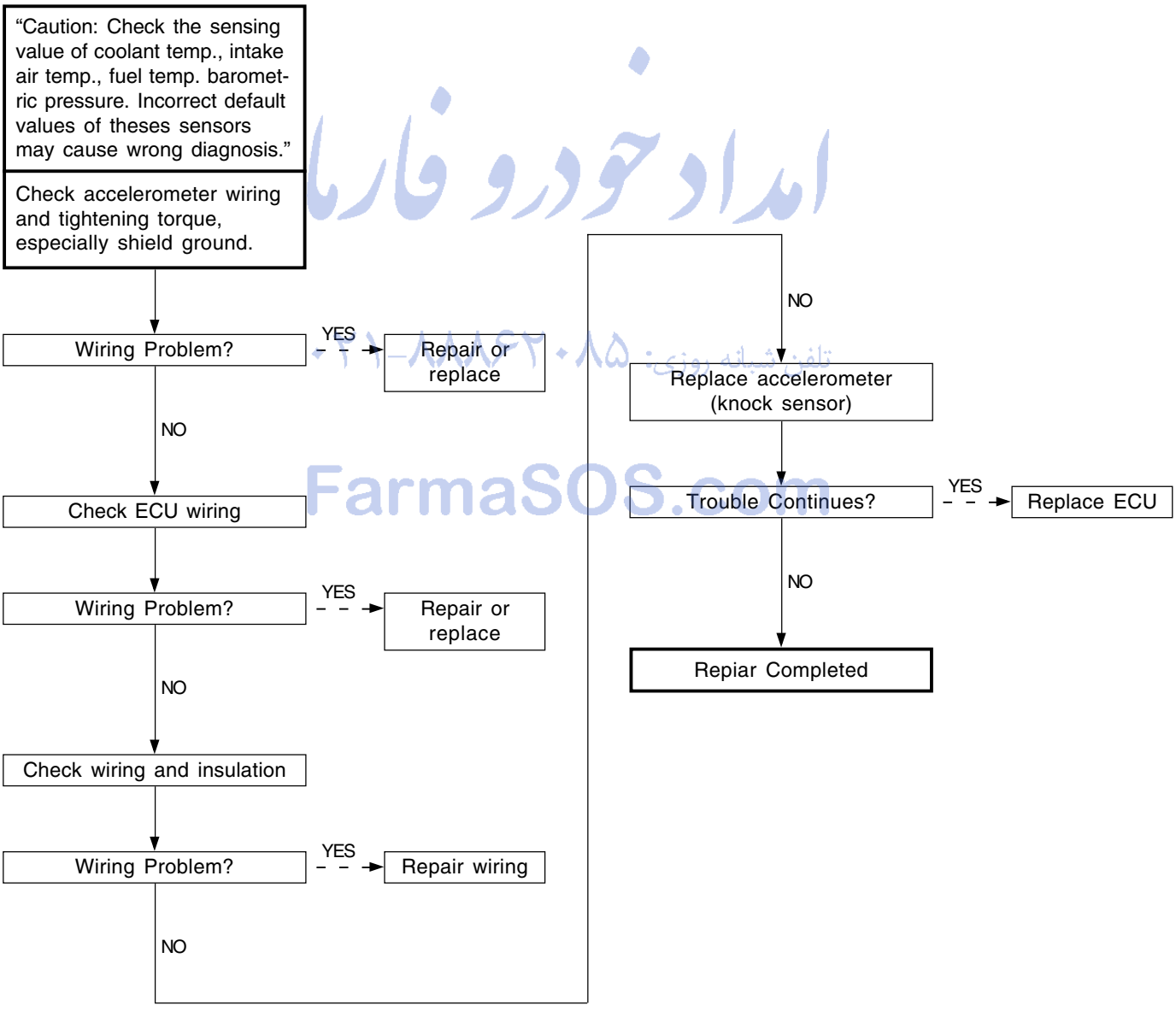

امداد خودرو فارما
FarmaSOS.com

CHANGED BY	
EFFECTIVE DATE	
AFFECTED VIN	

Injector Bank 1 Malfunction (Short to Ground or B+)

▶ Trouble Code and Symptom

Trouble Code		Symptom
P1611	Low Injector Bank 1 Voltage	Resistance of injector #1 fault. Use estimate resistance level.
P1612	High Injector Bank 1 Voltage	Resistance of injector #4 fault. Use estimate resistance level.
		Resistance of injector #3 fault. Use estimate resistance level.
		MIL ON
		Unable Dynamic Leak of Injector #1
		Unable Dynamic Leak of Injector #4
		Unable Dynamic Leak of Injector #3
		Unable Cylinder Balancing
		Unable Injector #1 Operation
		Unable Injector #4 Operation
		Unable Injector #3 Operation
		Unable High Pressure Leak Detection
		Unable Accelerometer Learning Strategy

امداد خودرو فارما
۰۲۱-۸۸۸۶۲۰۸۵ تلفن شبانه روزی
FarmaSOS.com

▶ Diagnosis Procedures

1. Fuel Injection Bank 1/2

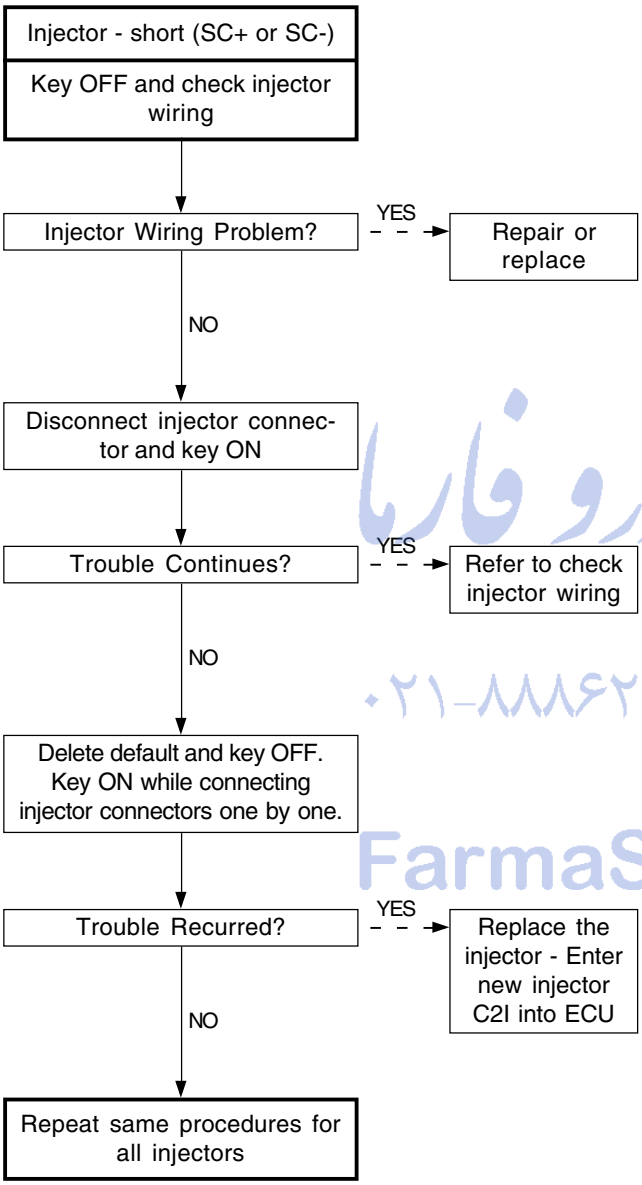

2. Check Injector Wiring

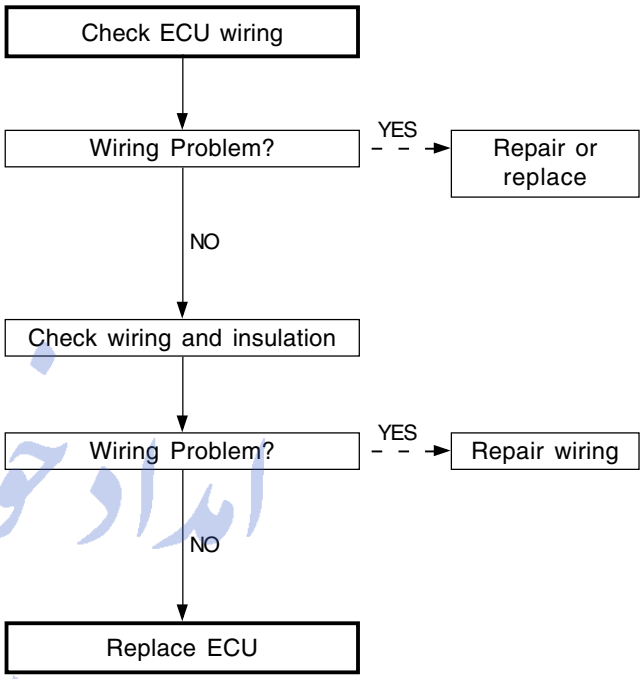

ایراد خودرو فارما
تلفن شبانه روزی: ۰۲۱-۸۸۸۶۲۰۸۵
FarmaSOS.com

CHANGED BY	
EFFECTIVE DATE	
AFFECTED VIN	

Injector Bank 2 Malfunction (Short to Ground or B+)

▶ Trouble Code and Symptom

Trouble Code		Symptom
P1618	Low Injector Bank 2 Voltage	Resistance of injector #2 fault. Use estimate resistance level.
P1619	High Injector Bank 2 Voltage	Resistance of injector #5 fault. Use estimate resistance level.
		MIL ON
		Unable Dynamic Leak of Injector #2
		Unable Dynamic Leak of Injector #5
		Unable Cylinder Balancing
		Unable Injector #2 Operation
		Unable Injector #5 Operation
		Unable High Pressure Leak Detection
		Unable Accelerometer Learning Strategy

امداد خودرو فارما
تلفن شبانه روزی: ۰۲۱-۸۸۸۶۲۰۸۵
FarmaSOS.com

▶ Diagnosis Procedures

1. Fuel Injection Bank 1/2

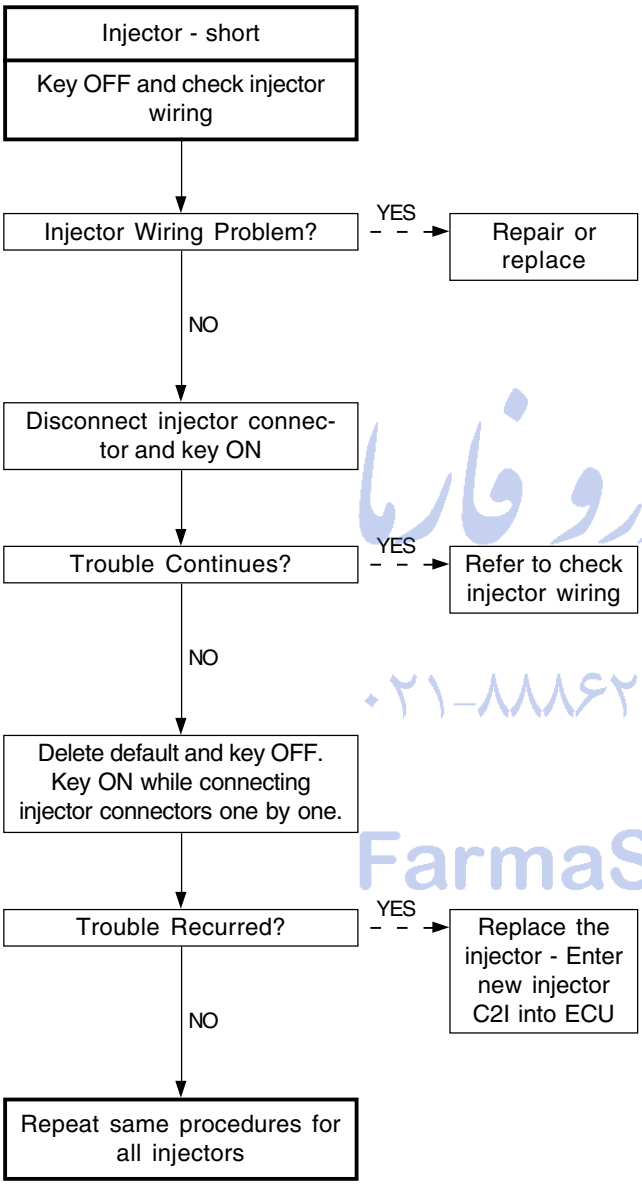

2. Check Injector Wiring

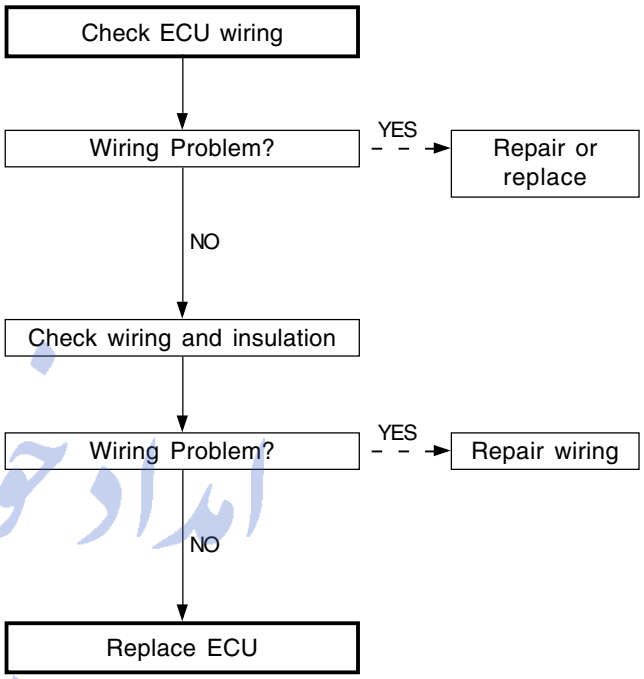

ایراد خودرو فارما
تلفن شبانه روزی: ۰۲۱-۸۸۸۶۲۰۸۵
FarmaSOS.com

CHANGED BY	
EFFECTIVE DATE	
AFFECTED VIN	

Cylinder Balancing Fault (Injector #1) = Clogged Air Intake System

▶ Trouble Code and Symptom

Trouble Code		Symptom
P0263	#1 Cylinder Balancing Fault	MIL ON
		Unable Accelerometer Learning Strategy

▶ Diagnosis Procedures

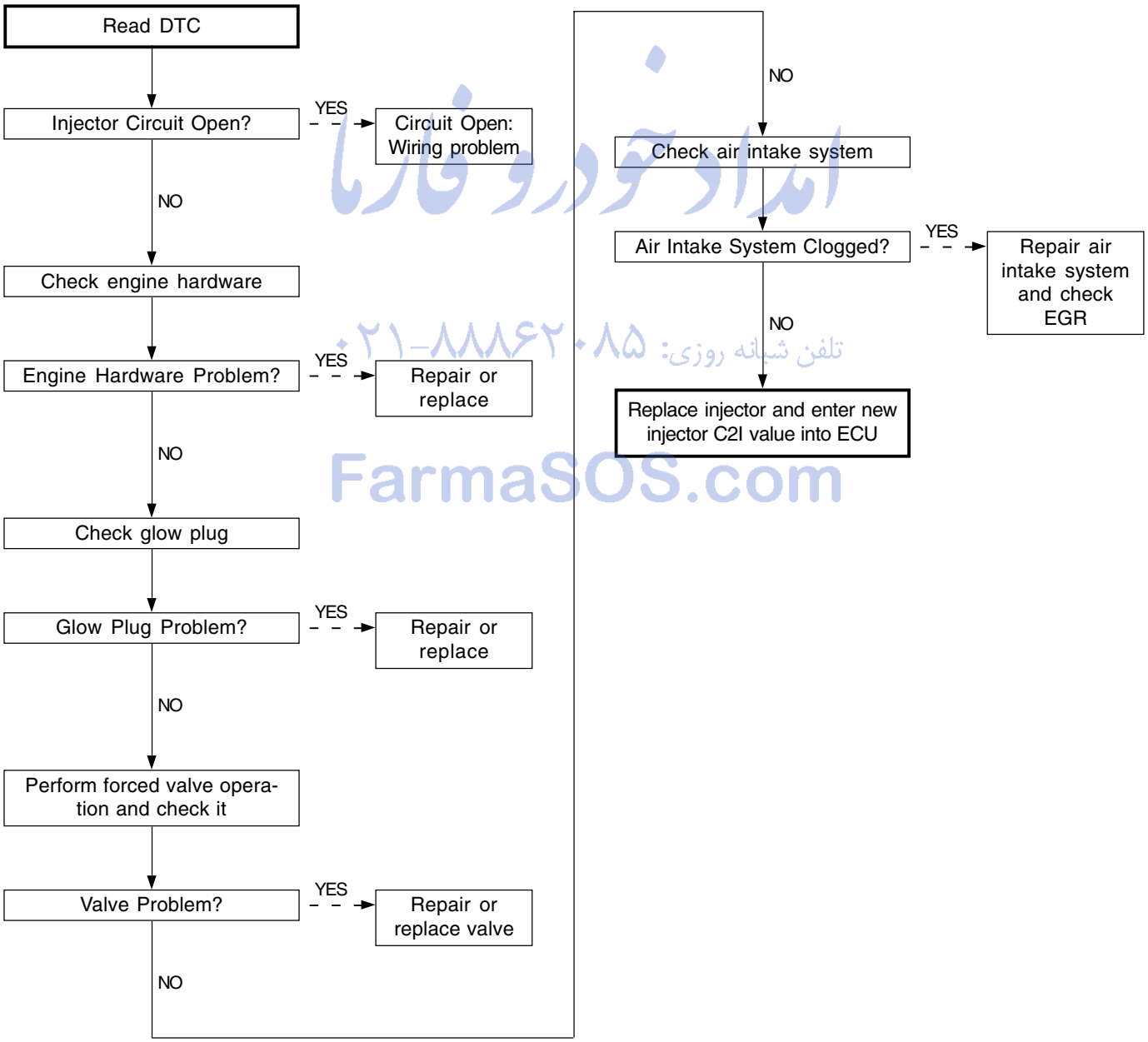

امداد خودرو فارنا
تلفن شبانه روزی: ۰۲۱-۸۸۸۶۲۰۸۵
FarmaSOS.com

Cylinder Balancing Fault (Injector #2) = Clogged Air Intake System

▶ Trouble Code and Symptom

Trouble Code		Symptom
P0266	#2 Cylinder Balancing Fault	MIL ON
		Unable Accelerometer Learning Strategy

▶ Diagnosis Procedures

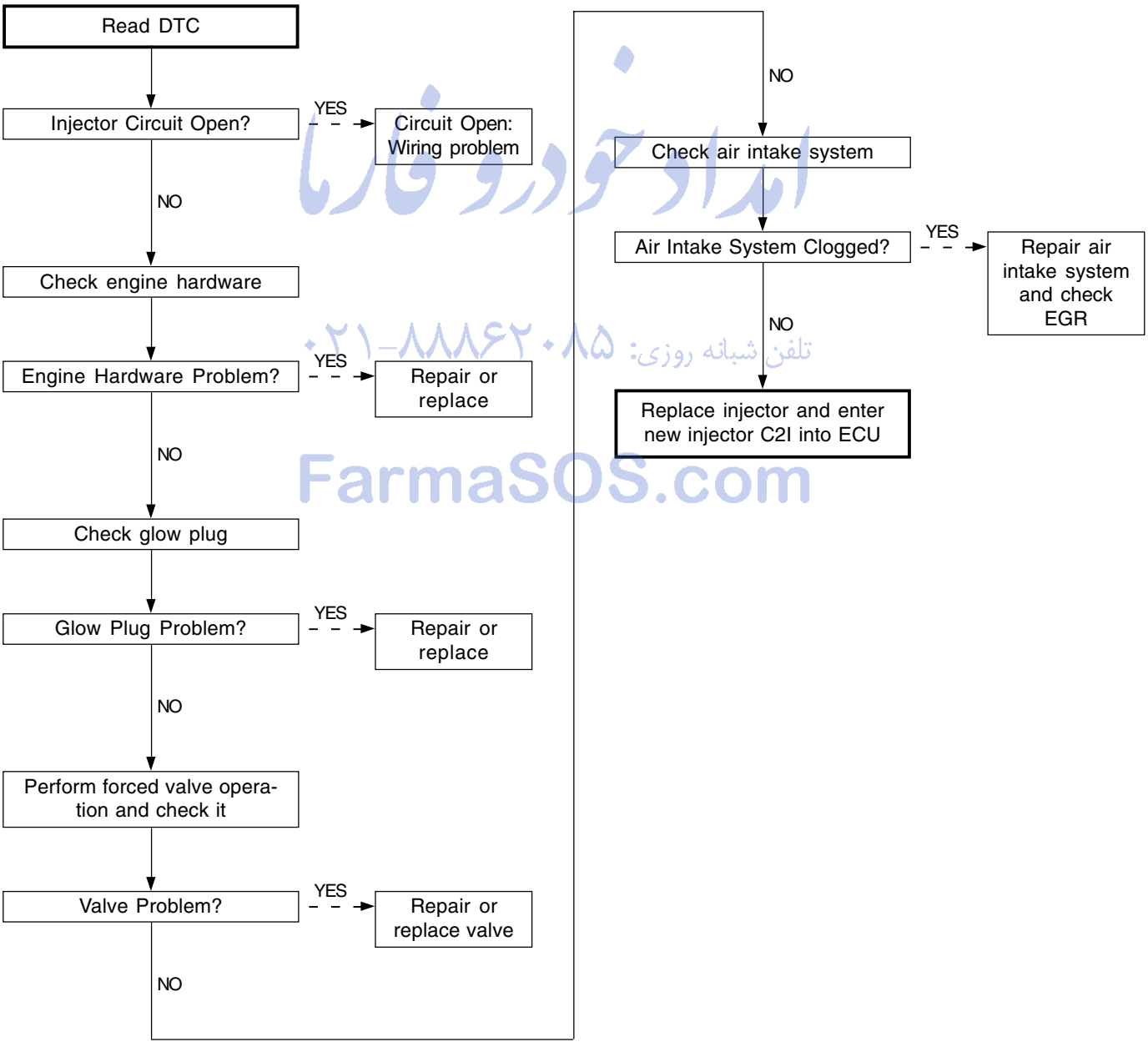

ایراد خودرو فارما
تلفن شبانه روزی: ۰۲۱-۸۸۸۶۲۰۸۵
FarmaSOS.com

CHANGED BY	
EFFECTIVE DATE	
AFFECTED VIN	

Cylinder Balancing Fault (Injector #4) = Clogged Air Intake System

▶ Trouble Code and Symptom

Trouble Code		Symptom
P0272	#4 Cylinder Balancing Fault	MIL ON
		Unable Accelerometer Learning Strategy

▶ Diagnosis Procedures

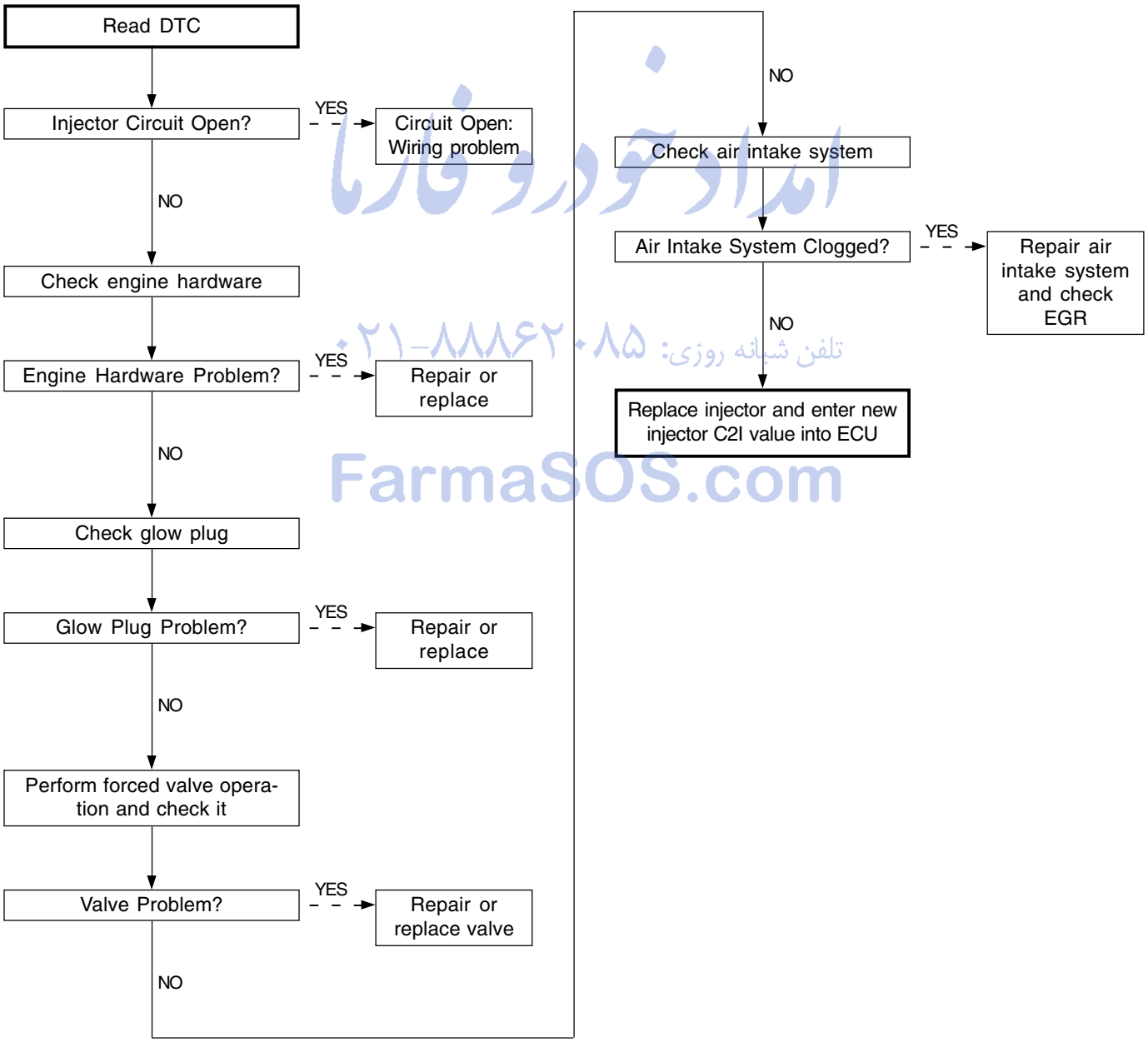

امداد خودرو فارما
تلفن شبانه روزی: ۰۲۱-۸۸۸۶۲۰۸۵
FarmaSOS.com

Cylinder Balancing Fault (Injector #5) = Clogged Air Intake System

▶ Trouble Code and Symptom

Trouble Code		Symptom
P0275	#5 Cylinder Balancing Fault	MIL ON
		Unable Accelerometer Learning Strategy

▶ Diagnosis Procedures

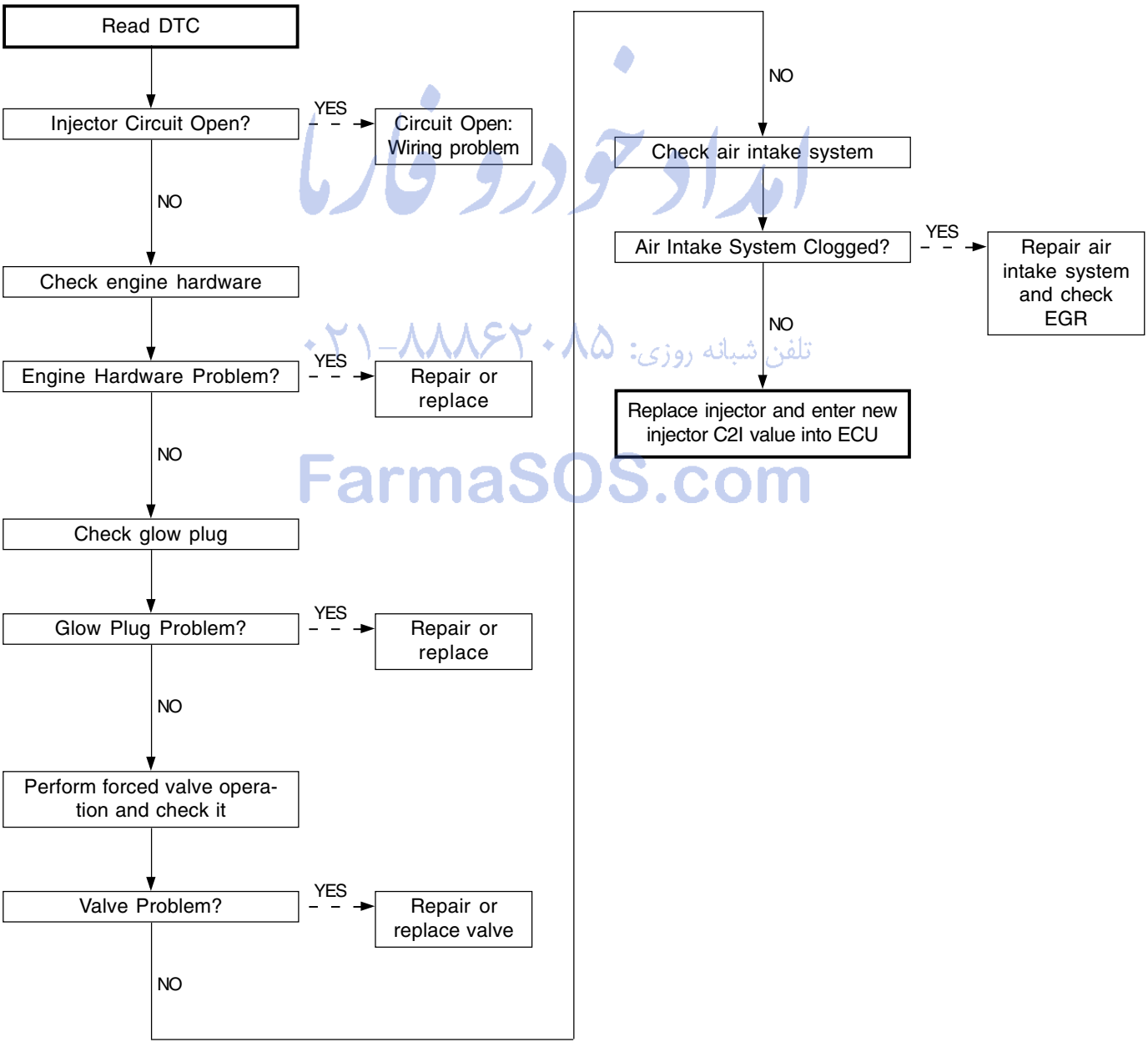

ایراد خودرو فارما
تلفن شبانه روزی: ۰۲۱-۸۸۸۶۲۰۸۵
FarmaSOS.com

CHANGED BY	
EFFECTIVE DATE	
AFFECTED VIN	

Cylinder Balancing Fault (Injector #3) = Clogged Air Intake System

▶ Trouble Code and Symptom

Trouble Code		Symptom
P0269	#3 Cylinder Balancing Fault	MIL ON
		Unable Accelerometer Learning Strategy

▶ Diagnosis Procedures

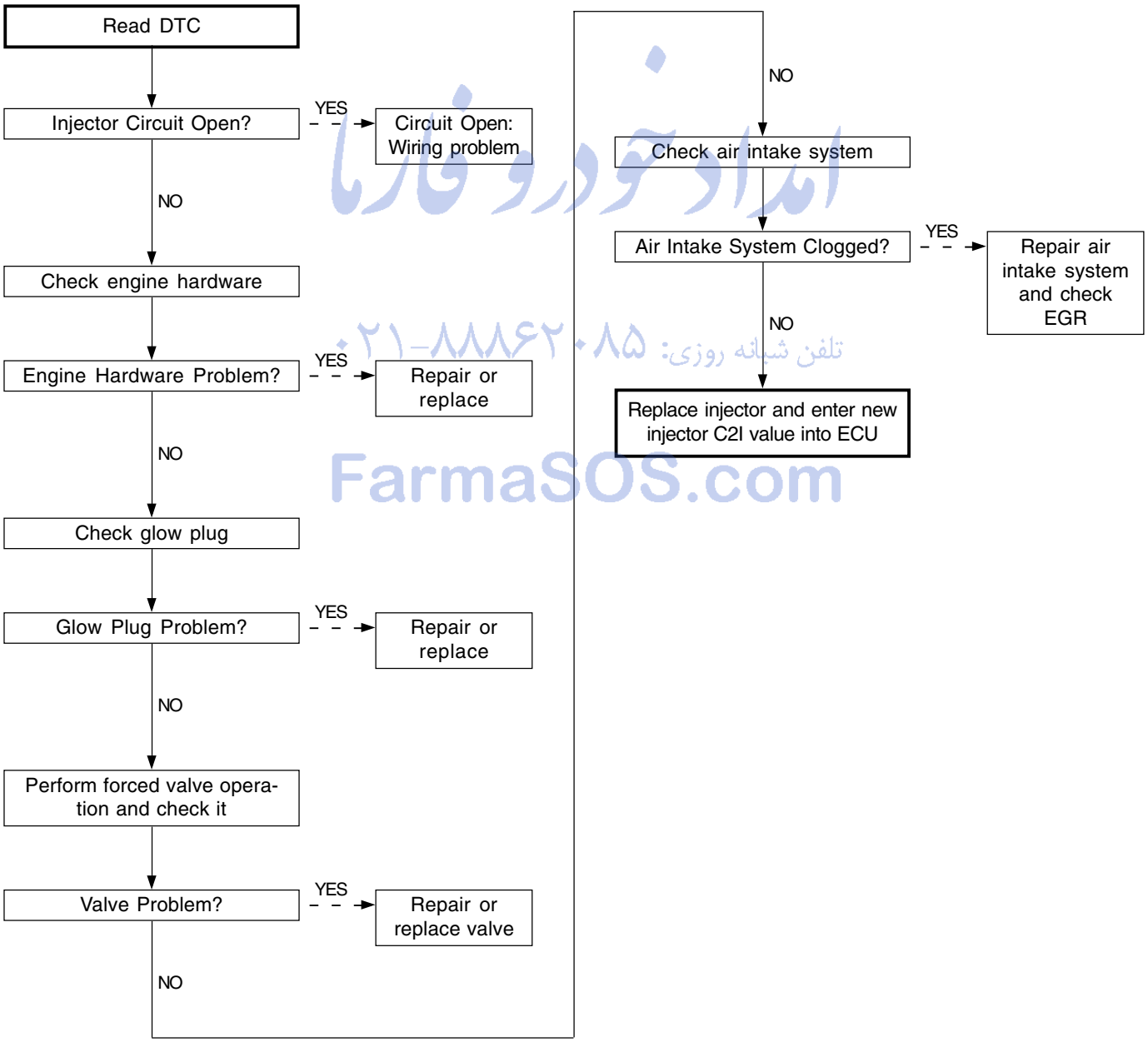

امداد خودرو فارما
تلفن شبانه روزی: ۰۲۱-۸۸۸۶۲۰۸۵
FarmaSOS.com

Open Circuit (Injector #1)

▶ Trouble Code and Symptom

Trouble Code		Symptom
P0201	#1 Injector Circuit - Open	Unable RPC Trim Fault Detection
		Unable H/P Leak Detection
		Unable Accelerometer Learning Strategy

▶ Diagnosis Procedures

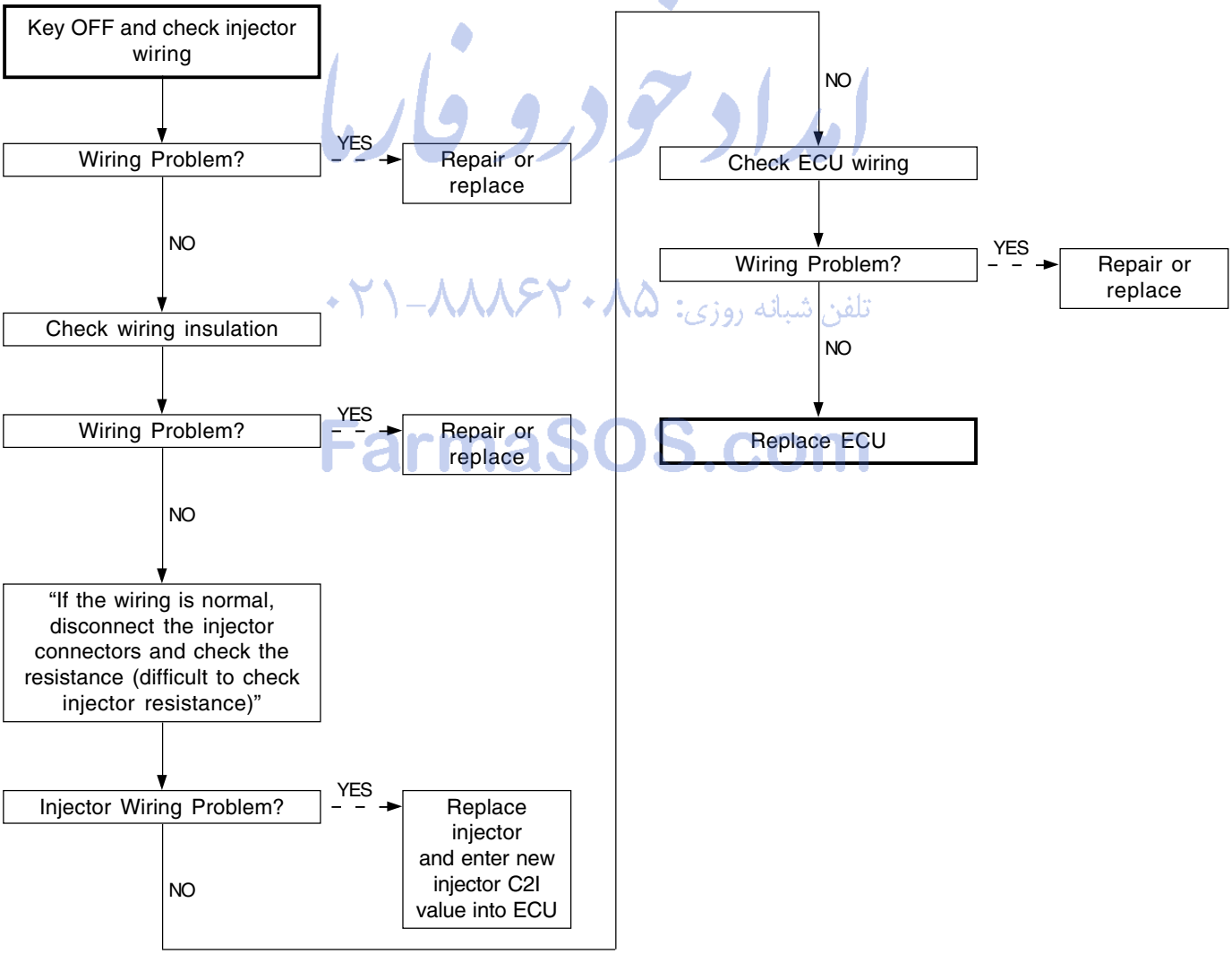

ایراد خودرو فارما
۰۲۱-۸۸۸۶۲۰۸۵ تلفن شبانه روزی:
FarmaSOS.com

CHANGED BY	
EFFECTIVE DATE	
AFFECTED VIN	

Open Circuit (Injector #2)

▶ Trouble Code and Symptom

Trouble Code		Symptom
P0202	#2 Injector Circuit - Open	Unable RPC Trim Fault Detection
		Unable H/P Leak Detection
		Unable Accelerometer Learning Strategy

▶ Diagnosis Procedures

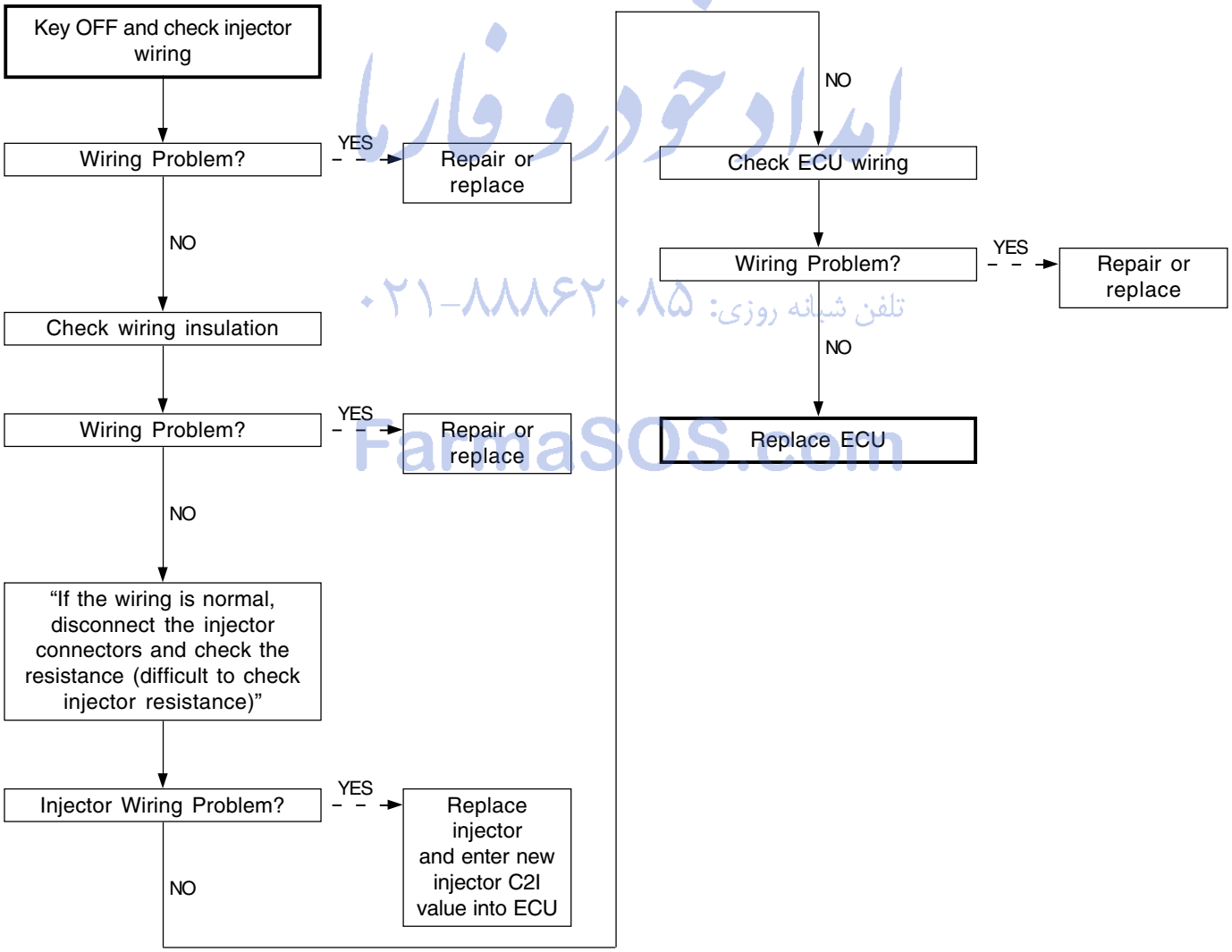

ایراد خودرو فارما
۰۲۱-۸۸۸۶۲۰۸۵ تلفن شبانه روزی:
FarmaSOS.com

Open Circuit (Injector #4)

▶ Trouble Code and Symptom

Trouble Code		Symptom
P0204	#4 Injector Circuit - Open	Unable RPC Trim Fault Detection
		Unable H/P Leak Detection
		Unable Accelerometer Learning Strategy

▶ Diagnosis Procedures

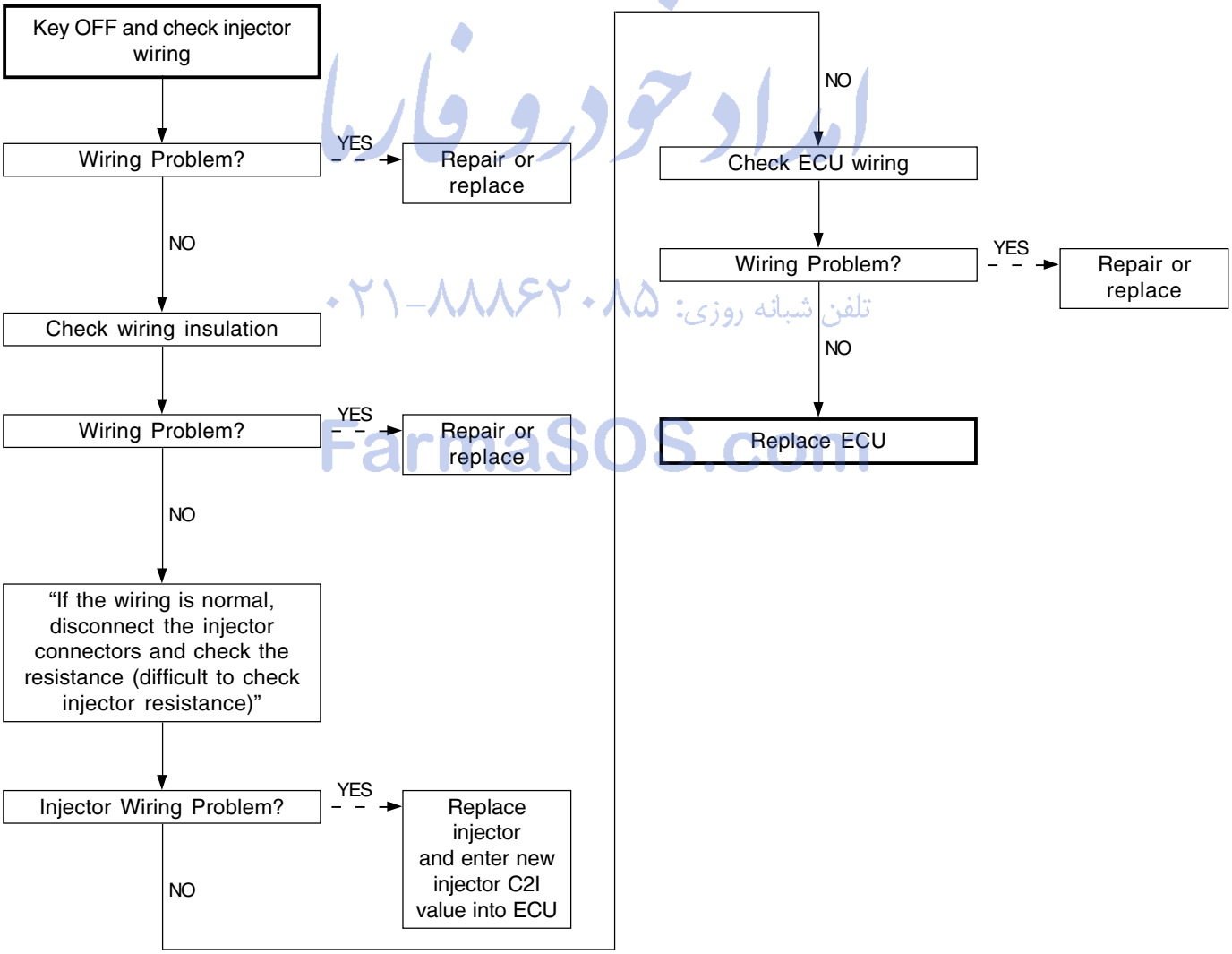

ایراد خودرو فارسی
۰۲۱-۸۸۸۶۲۰۸۵ تلفن شبانه روزی:
FarsiSOS.com

CHANGED BY	
EFFECTIVE DATE	
AFFECTED VIN	

Open Circuit (Injector #5)

▶ Trouble Code and Symptom

Trouble Code		Symptom
P0205	#5 Injector Circuit - Open	Unable RPC Trim Fault Detection
		Unable H/P Leak Detection
		Unable Accelerometer Learning Strategy

▶ Diagnosis Procedures

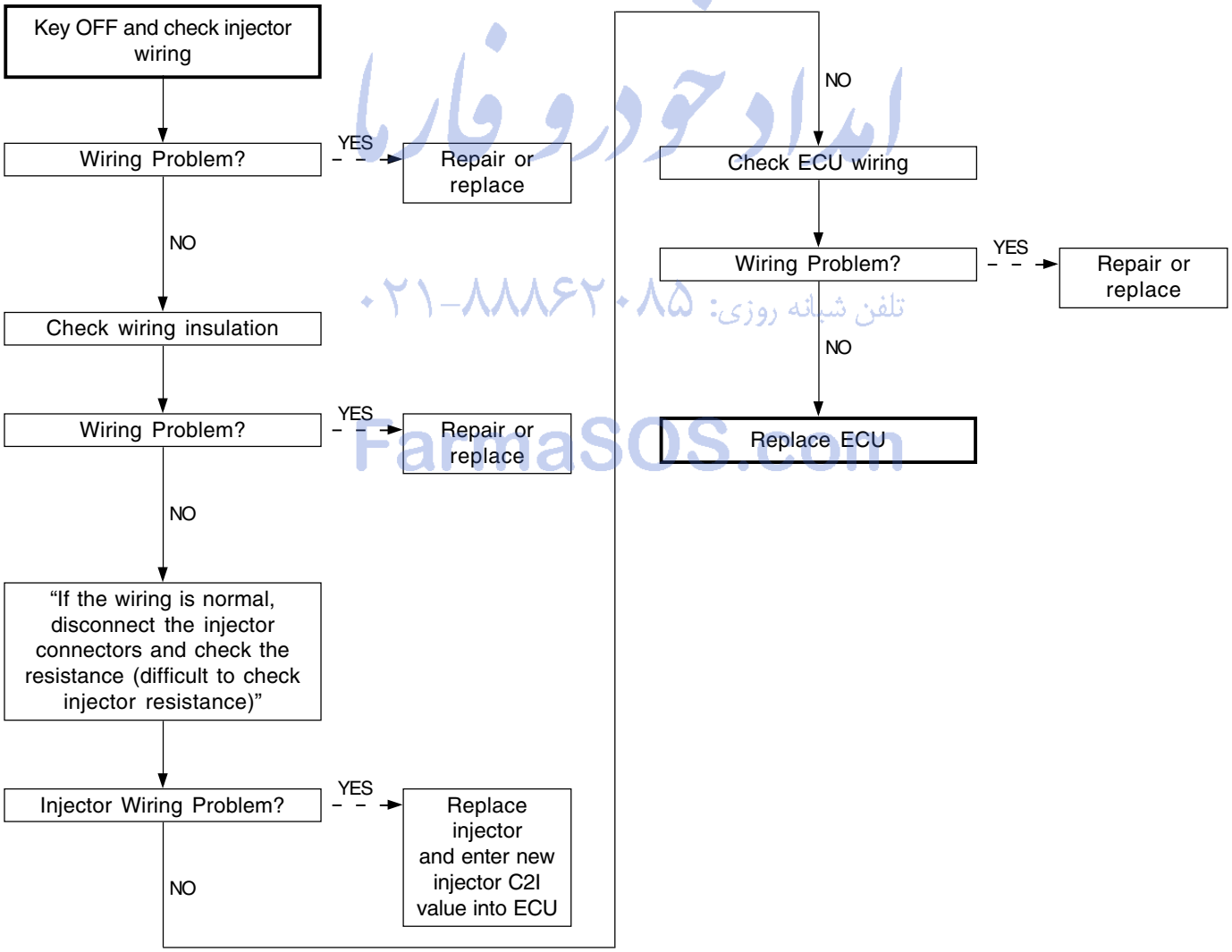

ایراد خودرو فارما
۰۲۱-۸۸۸۶۲۰۸۵ تلفن شبانه روزی:
FarmaSOS.com

Open Circuit (Injector #3)

▶ Trouble Code and Symptom

Trouble Code		Symptom
P0203	#3 Injector Circuit - Open	Unable RPC Trim Fault Detection
		Unable H/P Leak Detection
		Unable Accelerometer Learning Strategy

▶ Diagnosis Procedures

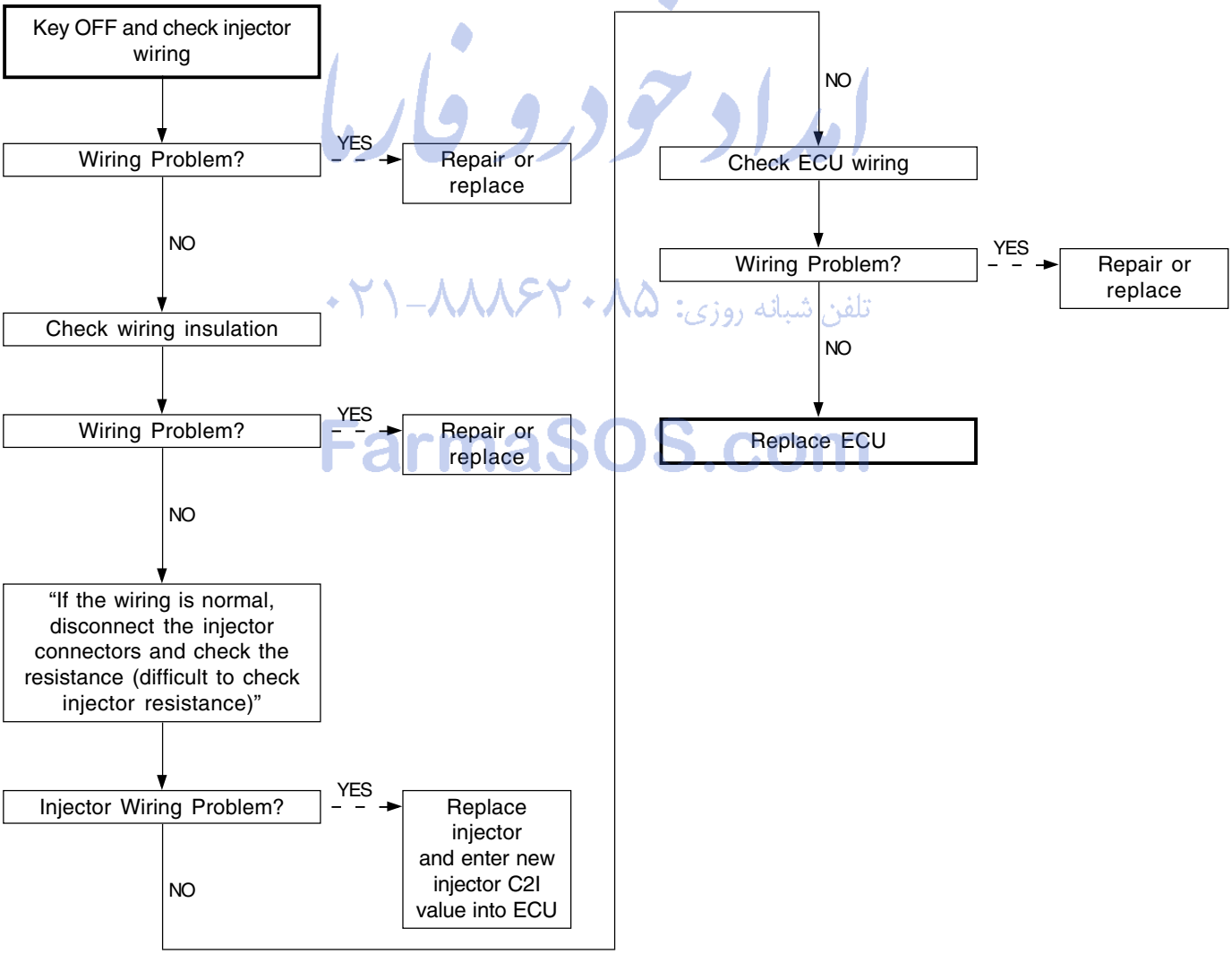

ایراد خودرو فارسی
۰۲۱-۸۸۸۶۲۰۸۵ تلفن شبانه روزی:
FarsiSOS.com

CHANGED BY	
EFFECTIVE DATE	
AFFECTED VIN	

HSD Circuit Short to LSE (Injector #1)

▶ Trouble Code and Symptom

Trouble Code		Symptom
P1201	#1 Injector Circuit - Short	Unable RPC Trim Fault Detection
		Unable H/P Leak Detection
		Unable Accelerometer Learning Strategy

▶ Diagnosis Procedures

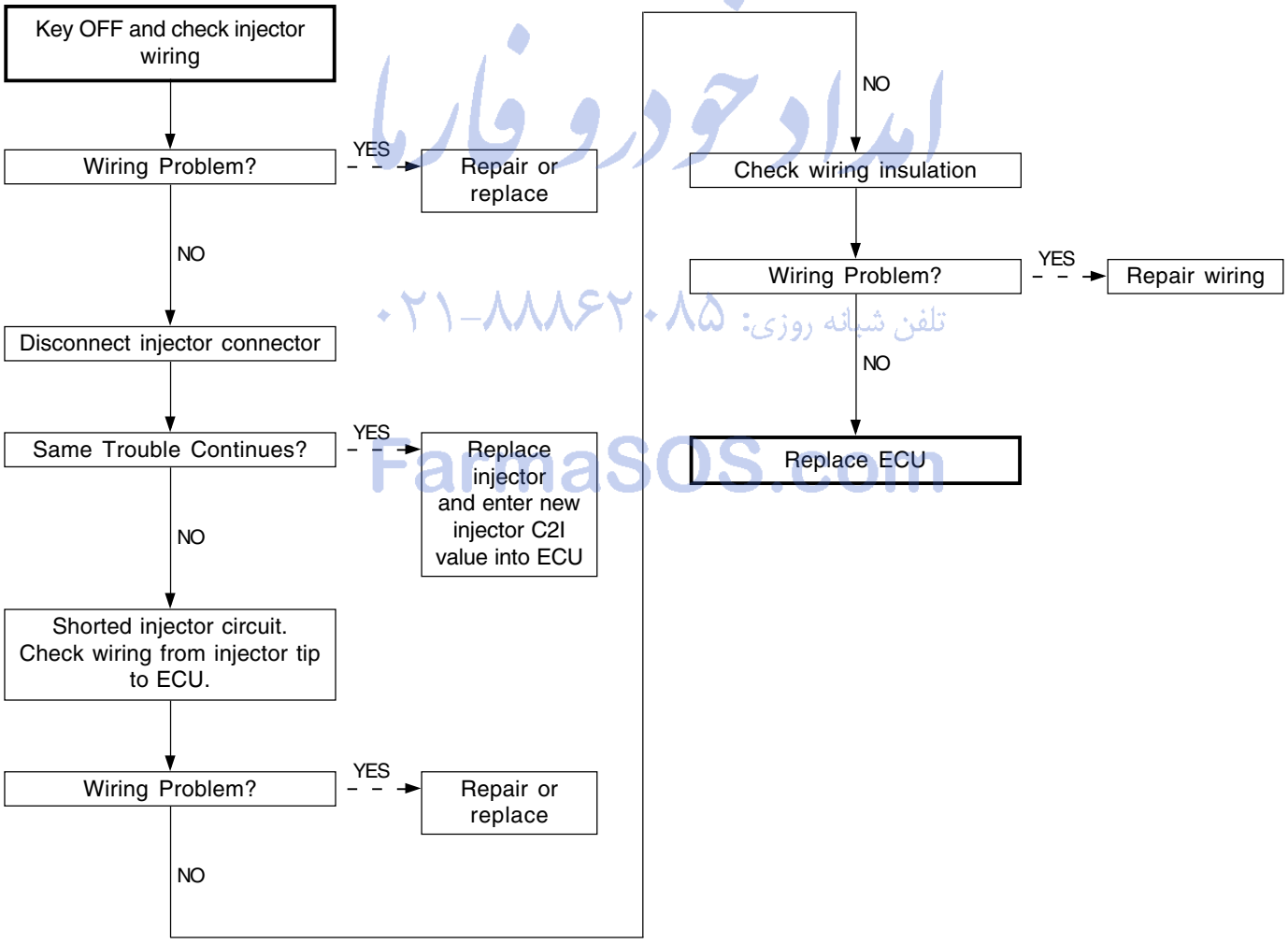

ایساد خودرو فارما
۰۲۱-۸۸۸۶۲۰۸۵ تلفن شبانه روزی:
FarmaSOS.com

HSD Circuit Short to LSE (Injector #2)

▶ Trouble Code and Symptom

Trouble Code		Symptom
P1202	#2 Injector Circuit - Short	Unable RPC Trim Fault Detection
		Unable H/P Leak Detection
		Unable Accelerometer Learning Strategy

▶ Diagnosis Procedures

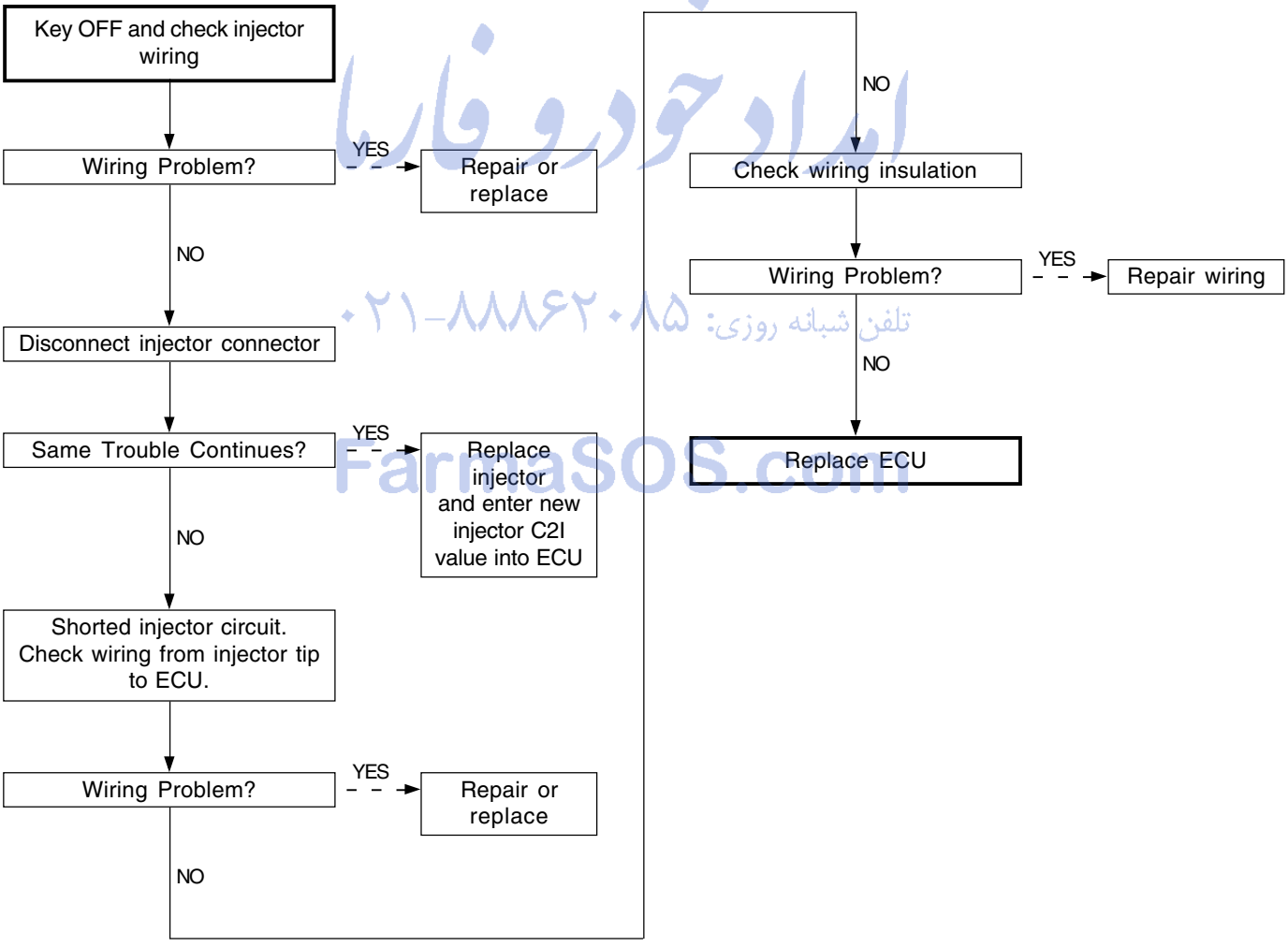

ایراد خودرو فارما
۰۲۱-۸۸۸۶۲۰۸۵ تلفن شبانه روزی:
FarmaSOS.com

CHANGED BY	
EFFECTIVE DATE	
AFFECTED VIN	

HSD Circuit Short to LSE (Injector #4)

▶ Trouble Code and Symptom

Trouble Code		Symptom
P1204	#4 Injector Circuit - Short	Unable RPC Trim Fault Detection
		Unable H/P Leak Detection
		Unable Accelerometer Learning Strategy

▶ Diagnosis Procedures

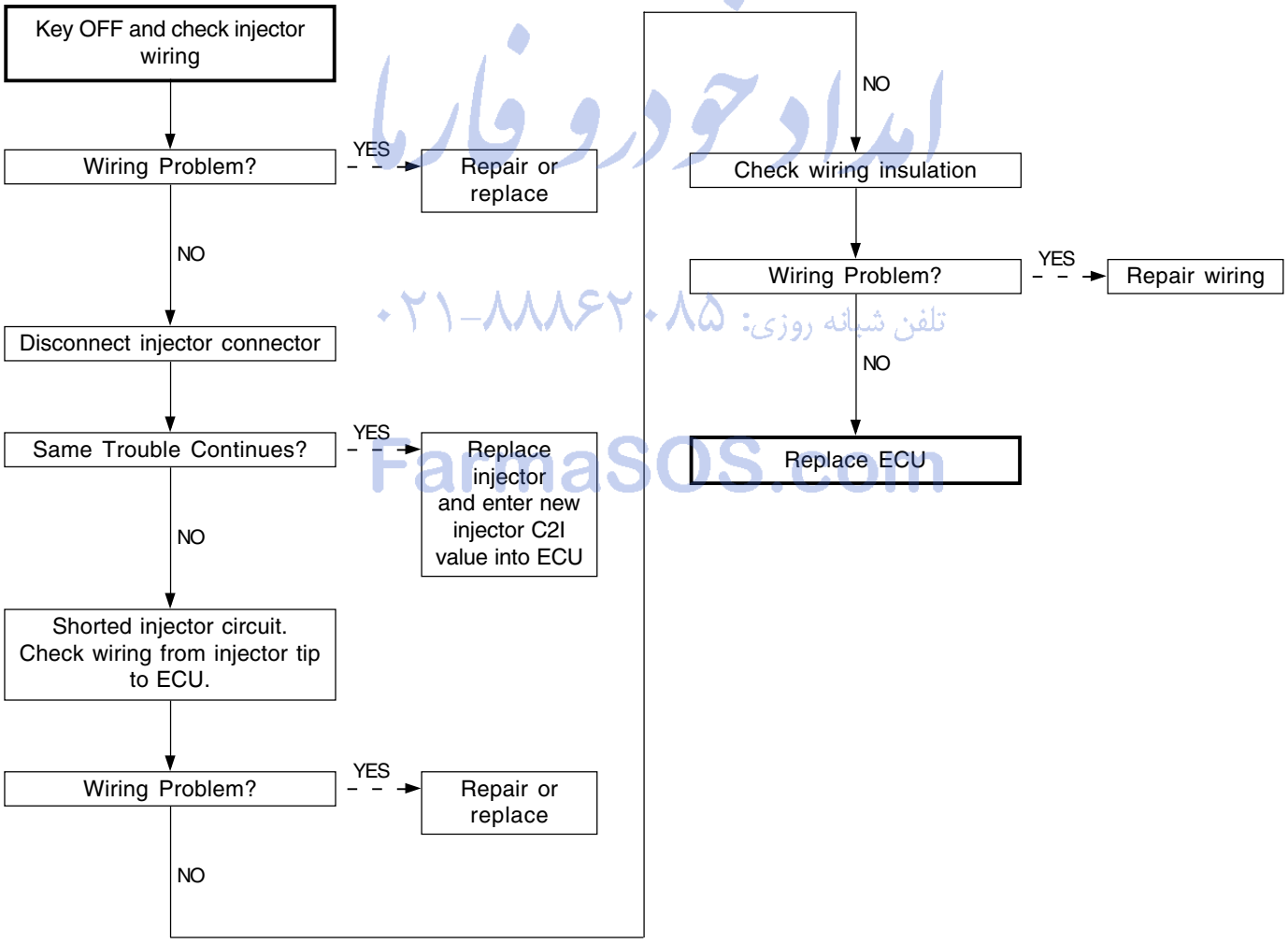

ایساد خودرو فارما
۰۲۱-۸۸۸۶۲۰۸۵ تلفن شبانه روزی:
FarmaSOS.com

HSD Circuit Short to LSE (Injector #5)

▶ Trouble Code and Symptom

Trouble Code		Symptom
P1205	#5 Injector Circuit - Short	Unable RPC Trim Fault Detection
		Unable H/P Leak Detection
		Unable Accelerometer Learning Strategy

▶ Diagnosis Procedures

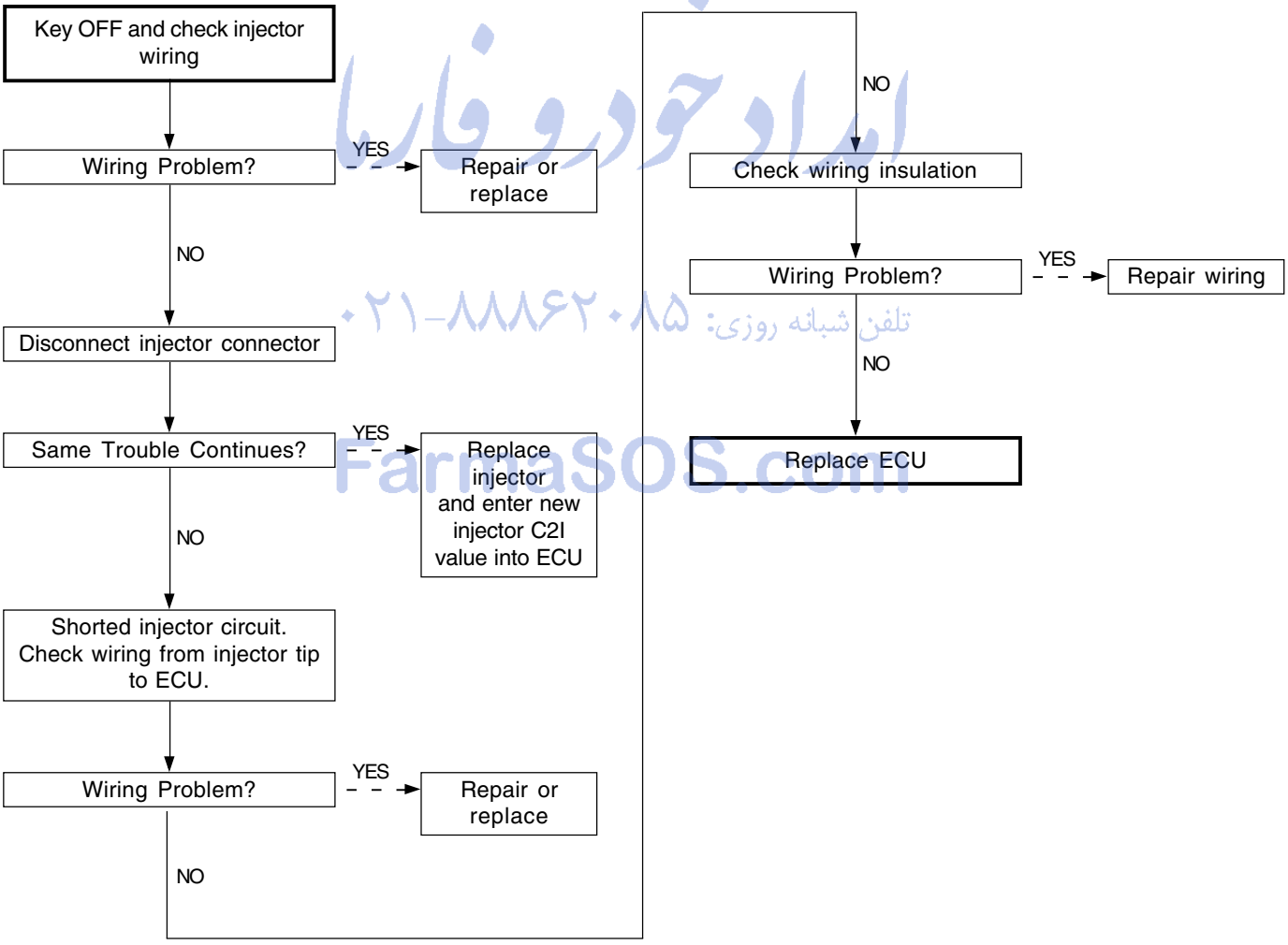

ایراد خودرو فارما
۰۲۱-۸۸۸۶۲۰۸۵ تلفن شبانه روزی:
FarmaSOS.com

CHANGED BY	
EFFECTIVE DATE	
AFFECTED VIN	

HSD Circuit Short to LSE (Injector #3)

▶ Trouble Code and Symptom

Trouble Code		Symptom
P1203	#3 Injector Circuit - Short	Unable RPC Trim Fault Detection
		Unable H/P Leak Detection
		Unable Accelerometer Learning Strategy

▶ Diagnosis Procedures

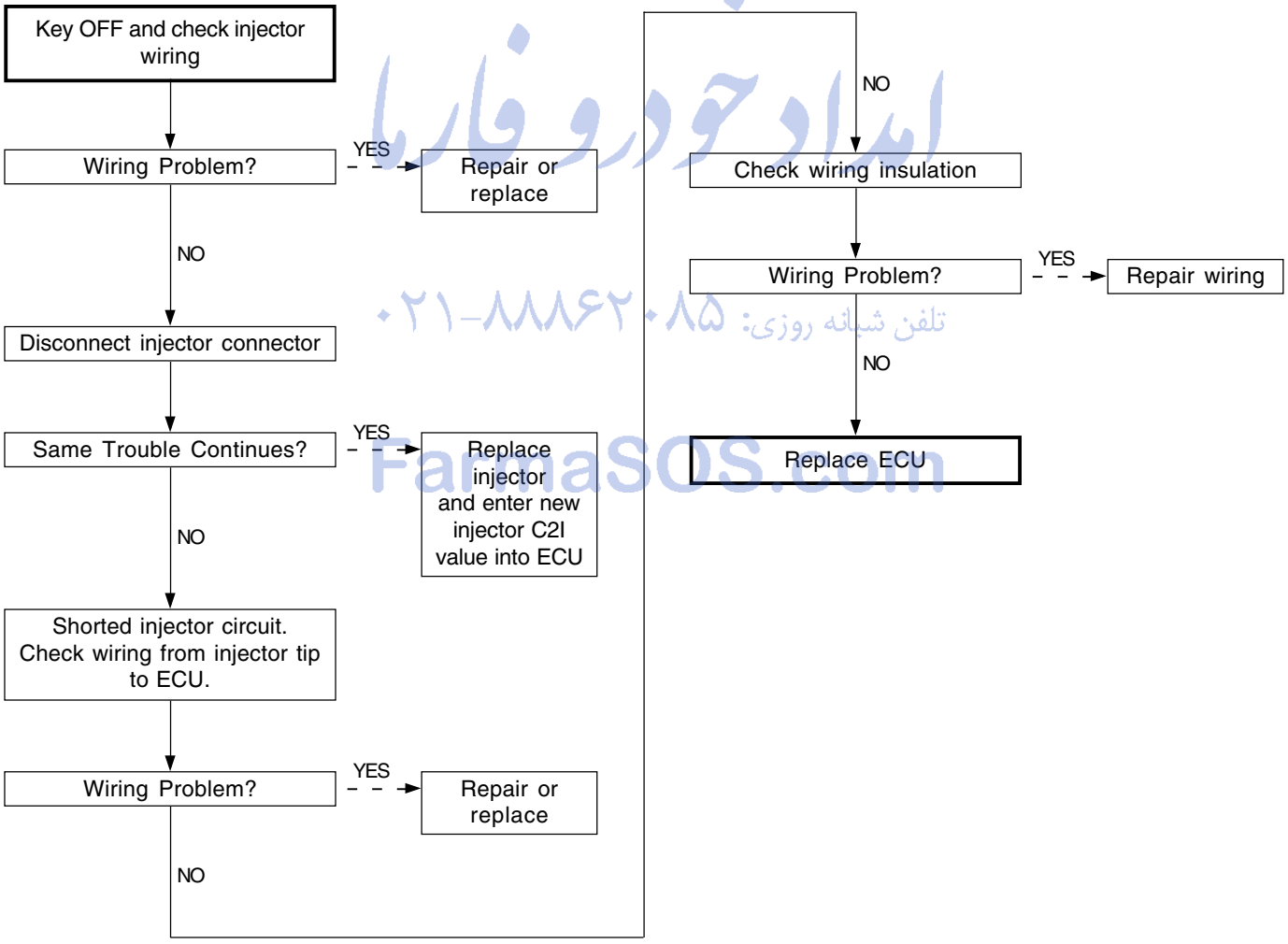

ایراد خودرو فارما
۰۲۱-۸۸۸۶۲۰۸۵ تلفن شبانه روزی:
FarmaSOS.com

Fuel Temperature Sensor Malfunction

▶ Trouble Code and Symptom

Trouble Code		Symptom
P0182	Low	
P0183	High	
P0180	Supply Voltage	

▶ Diagnosis Procedures

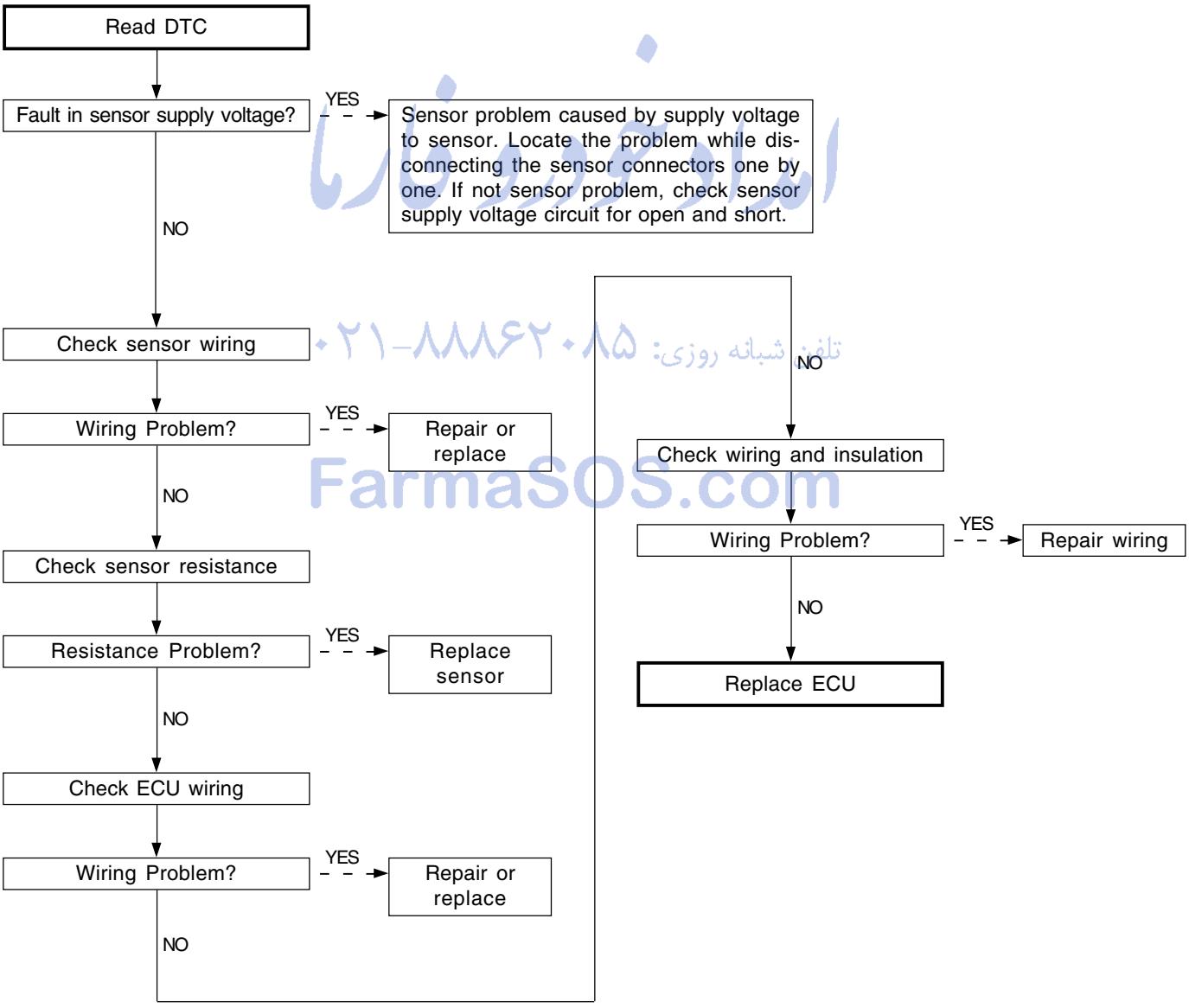

FarmaSOS.com
تلفن شبانه روزی: ۰۲۱-۸۸۸۶۲۰۸۵

CHANGED BY	
EFFECTIVE DATE	
AFFECTED VIN	

Glow Plug Malfunction (Driving Signal)

▶ Trouble Code and Symptom

Trouble Code		Symptom
P1678	Open Circuit	MIL ON
P1679	Short Circuit	Glow Plug Indicator ON
P1680	Short to Ground	

▶ Diagnosis Procedures

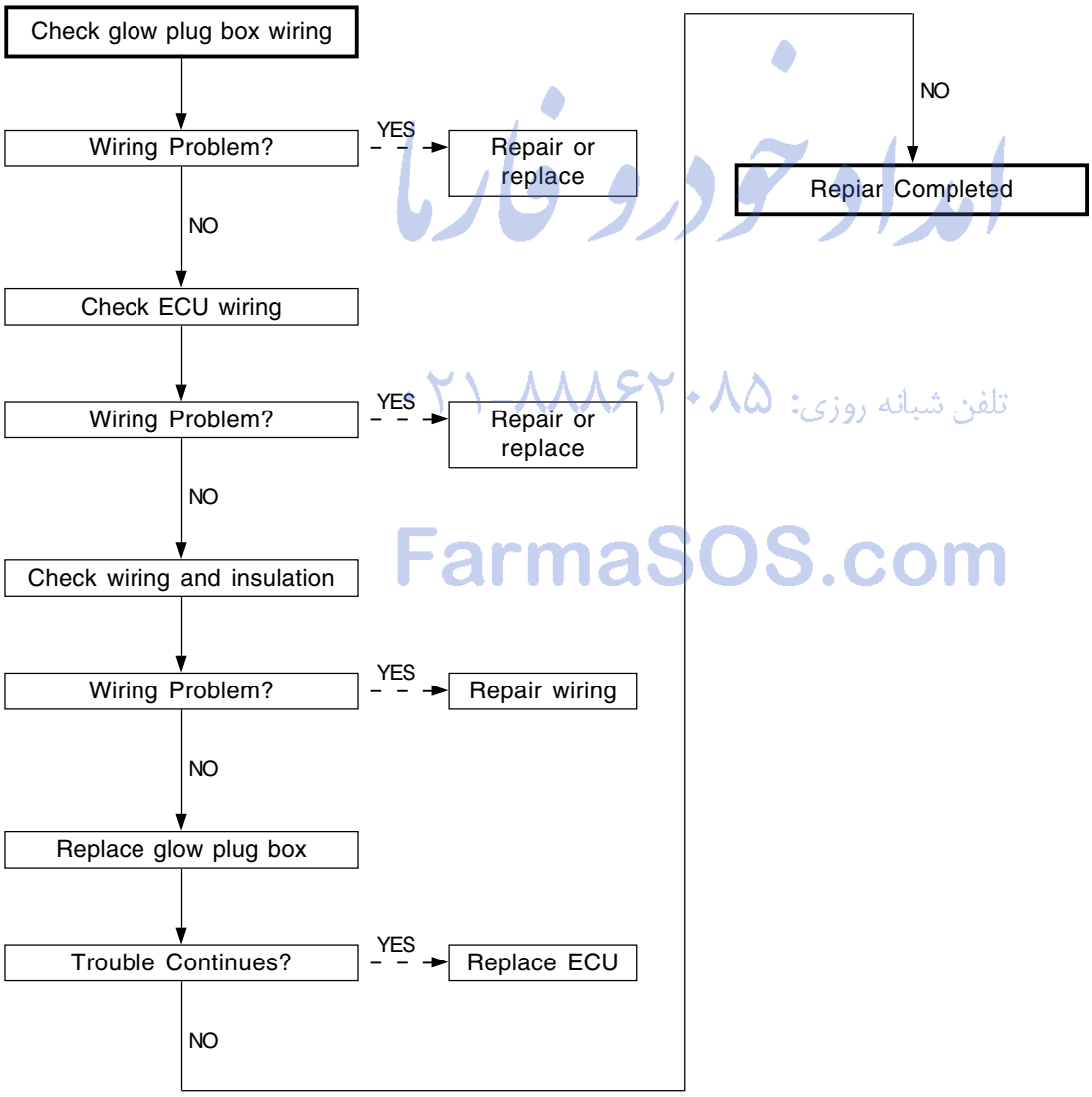

امداد خودرو فارما
تلفن شبانه روزی: ۰۸۵ ۸۸۸۶۲۰۸۵ ۲۱
FarmaSOS.com

Heater 1 Malfunction (Driving Signal)

▶ Trouble Code and Symptom

Trouble Code		Symptom
P1530	Open Circuit	Unable Heater Operation
P1531	Short to +Batt	
P1532	Short to Ground	

▶ Diagnosis Procedures

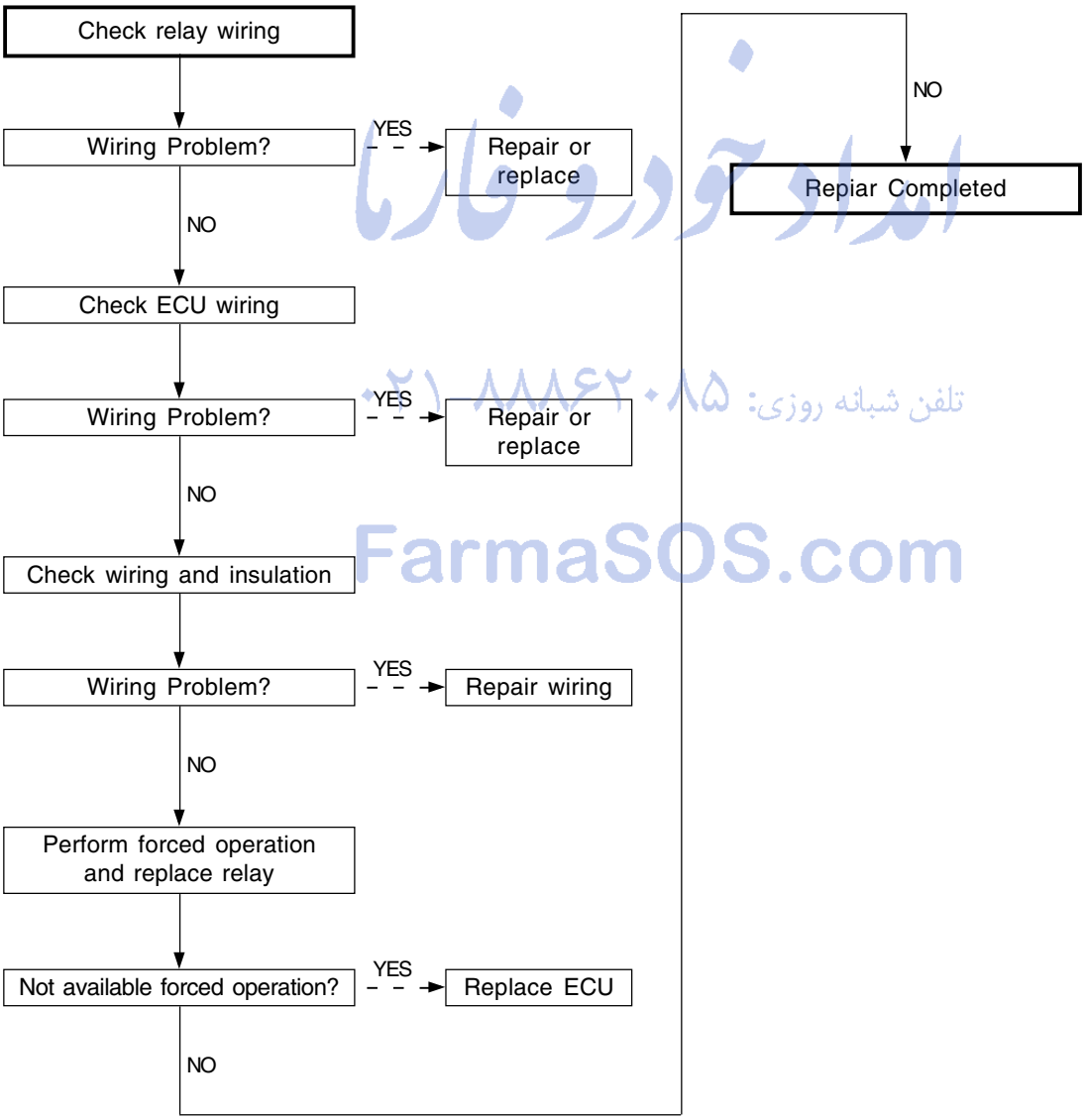

امداد خودرو فارما
تلفن شبانه روزی: ۰۲۱ ۸۸۸۶۲۰۸۵
FarmaSOS.com

CHANGED BY	
EFFECTIVE DATE	
AFFECTED VIN	

Heater 2 Malfunction (Driving Signal)

▶ Trouble Code and Symptom

Trouble Code		Symptom
P1534	Open Circuit	Unable Heater Operation
P1535	Short to +Batt	
P1536	Short to Ground	

▶ Diagnosis Procedures

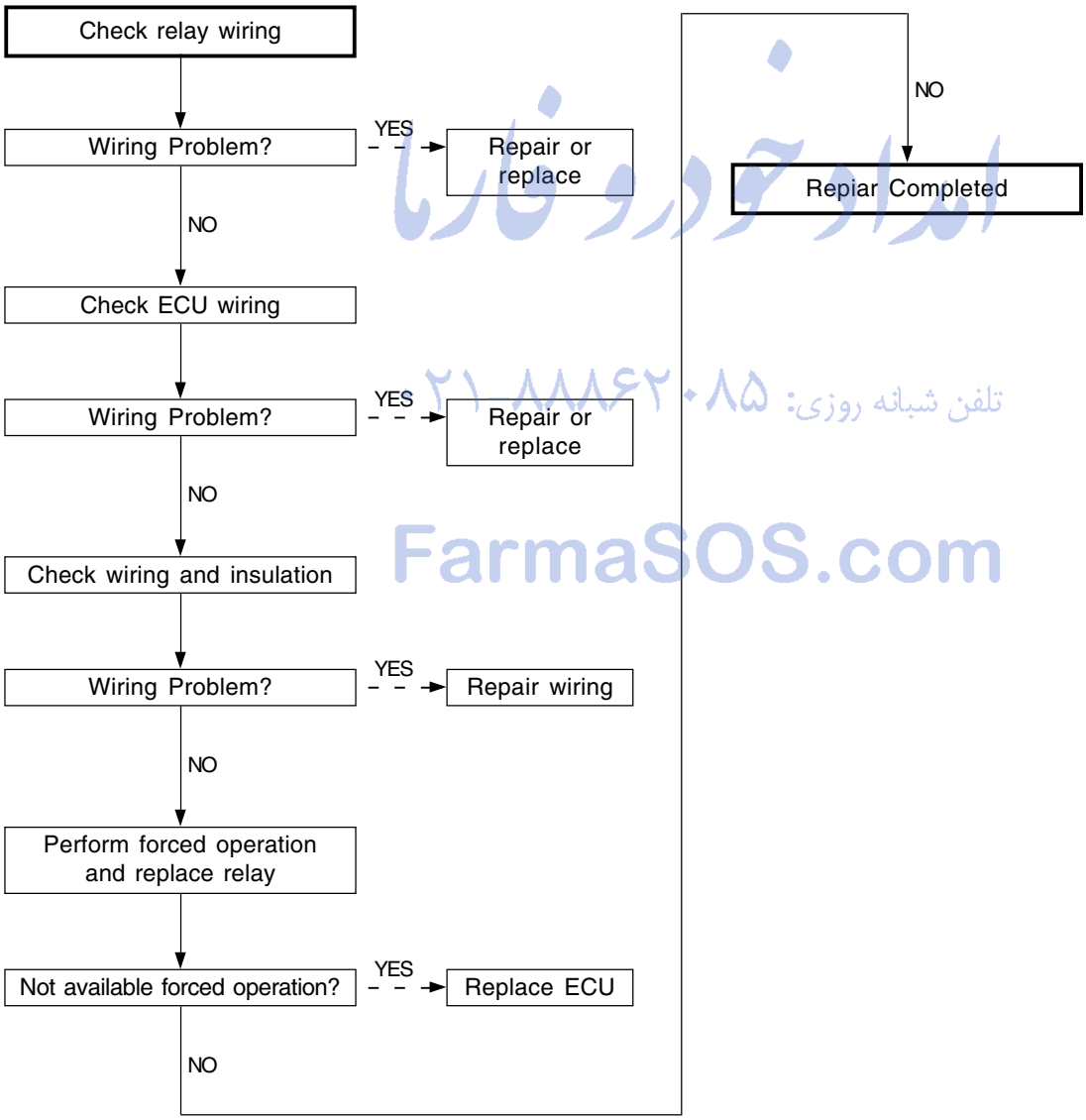

امداد خودرو فارما
تلفن شبانه روزی: ۰۸۵ ۸۸۸۶۲۰۲۱
FarmaSOS.com

Rail Pressure Control Fault (Too High Pressure)

▶ Trouble Code and Symptom

Trouble Code		Symptom
P1254	Maximum Value	Unable Accelerometer Decoding
P1253	Minimum Value	MIL ON
		Unable Dynamic Leak of Injector #1
		Unable Dynamic Leak of Injector #2
		Unable Dynamic Leak of Injector #4
		Unable Dynamic Leak of Injector #5
		Unable Dynamic Leak of Injector #3
		Unable Cylinder Balancing
		Unable Accelerometer Learning Strategy

امداد خودرو فارما
تلفن شبانه روزی: ۰۲۱-۸۸۸۶۲۰۸۵
FarmaSOS.com

▶ Diagnosis Procedures

1. Rail Pressure Control

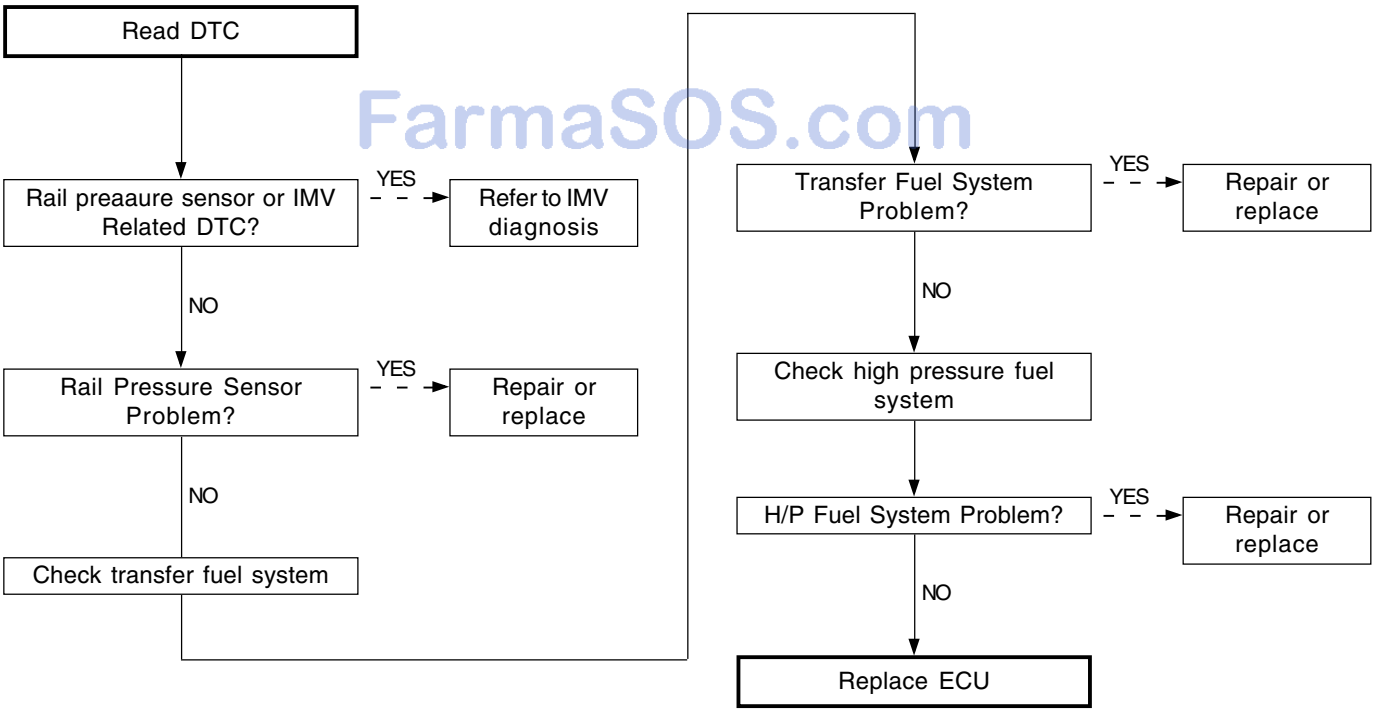

CHANGED BY	
EFFECTIVE DATE	
AFFECTED VIN	

2. Transfer Fuel System

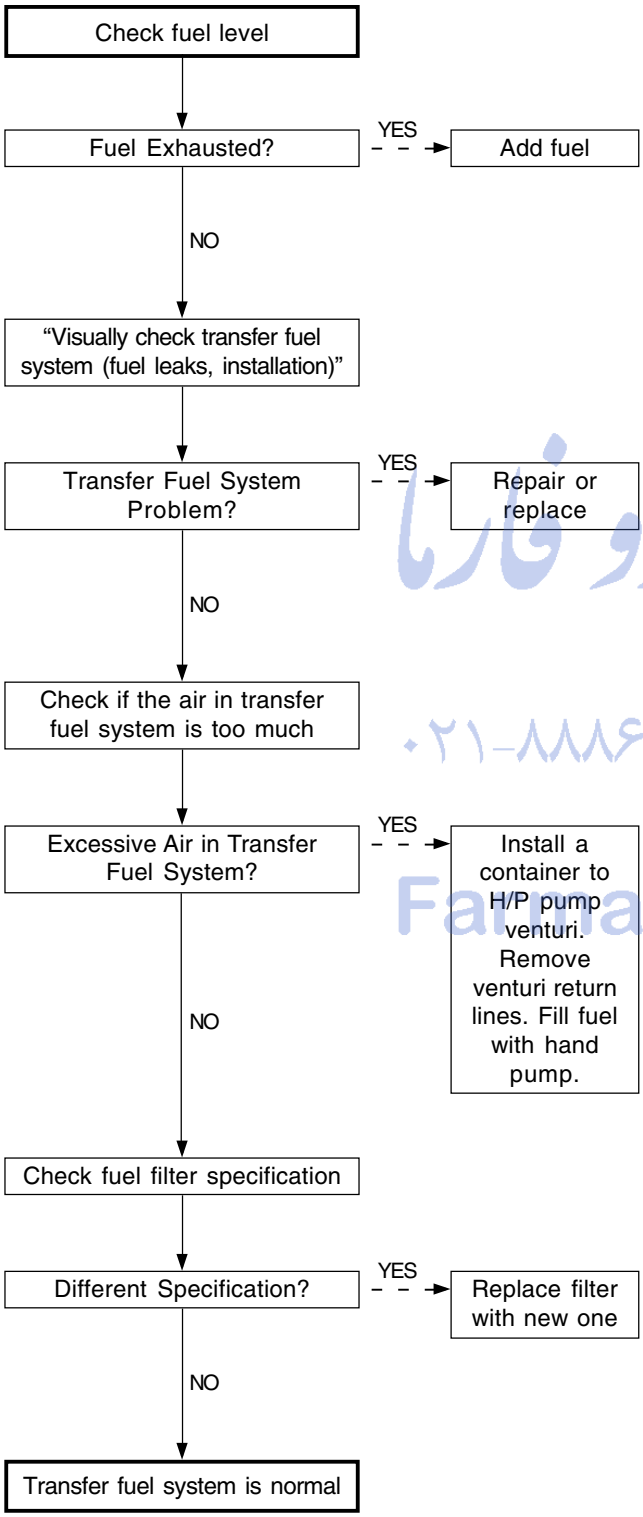

3. High Pressyre Fuel System

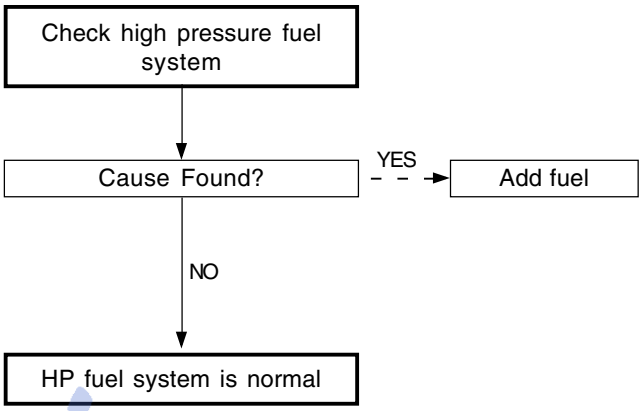

امداد خودرو فارما
تلفن شبانه روزی: ۰۲۱-۸۸۸۶۲۰۸۵
FarmaSOS.com

Rail Pressure Control Fault (Too High IMV Current Trim, drift)

▶ Trouble Code and Symptom

Trouble Code		Symptom
P1256	Small Delivery of Transfer Fuel	Unable Accelerometer Decoding
P1257	Large Delivery of Transfer Fuel	MIL ON
P1258	Small Delivery of High Pressure Fuel	Unable Dynamic Leak of Injector #1
P1259	Large Delivery of High Pressure Fuel	Unable Dynamic Leak of Injector #2
		Unable Dynamic Leak of Injector #4
		Unable Dynamic Leak of Injector #5
		Unable Dynamic Leak of Injector #3
		Unable Cylinder Balancing
		Unable Accelerometer Learning Strategy

امداد خودرو فارما
تلفن شبانه روزی: ۰۲۱-۸۸۴۶۲۰۸۵
FarmaSOS.com

▶ Diagnosis Procedures

1. Diagnosis Procedures (Rail Pressure Control)

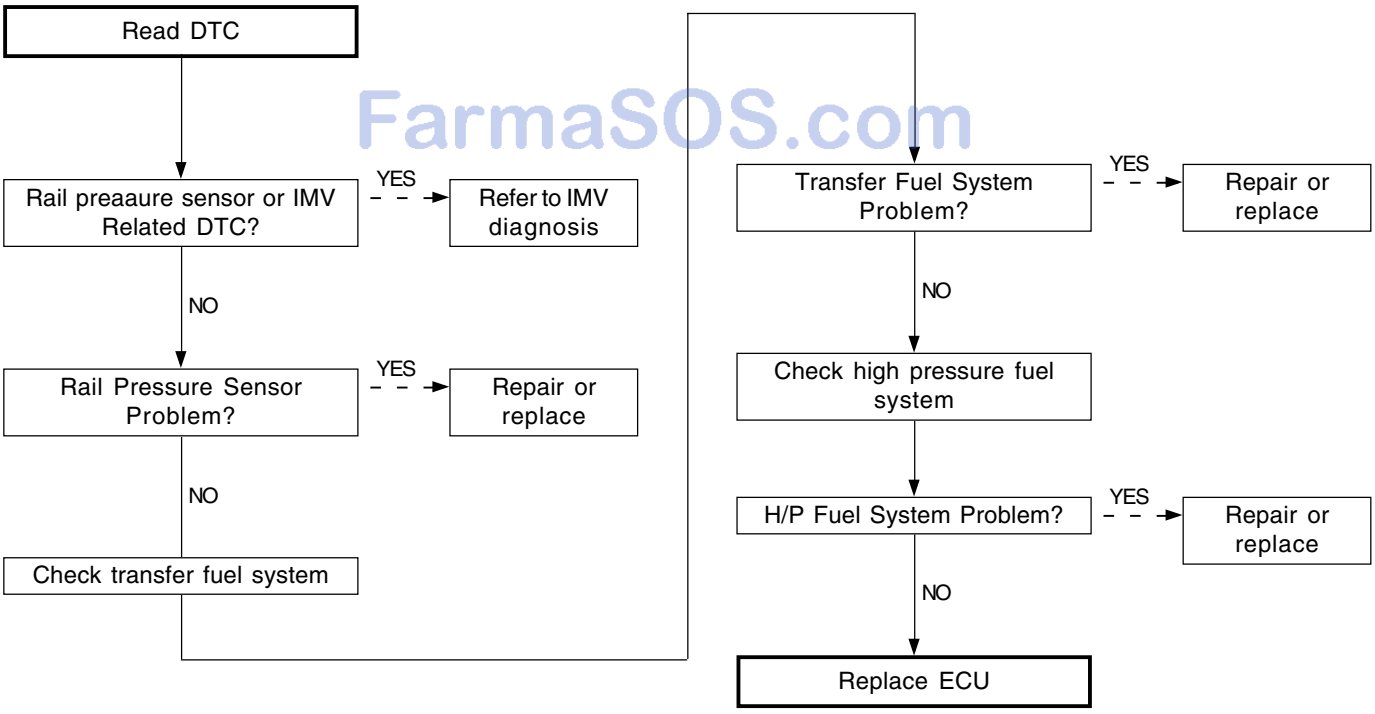

CHANGED BY	
EFFECTIVE DATE	
AFFECTED VIN	

2. Diagnosis Procedures (Transfer Fuel System)

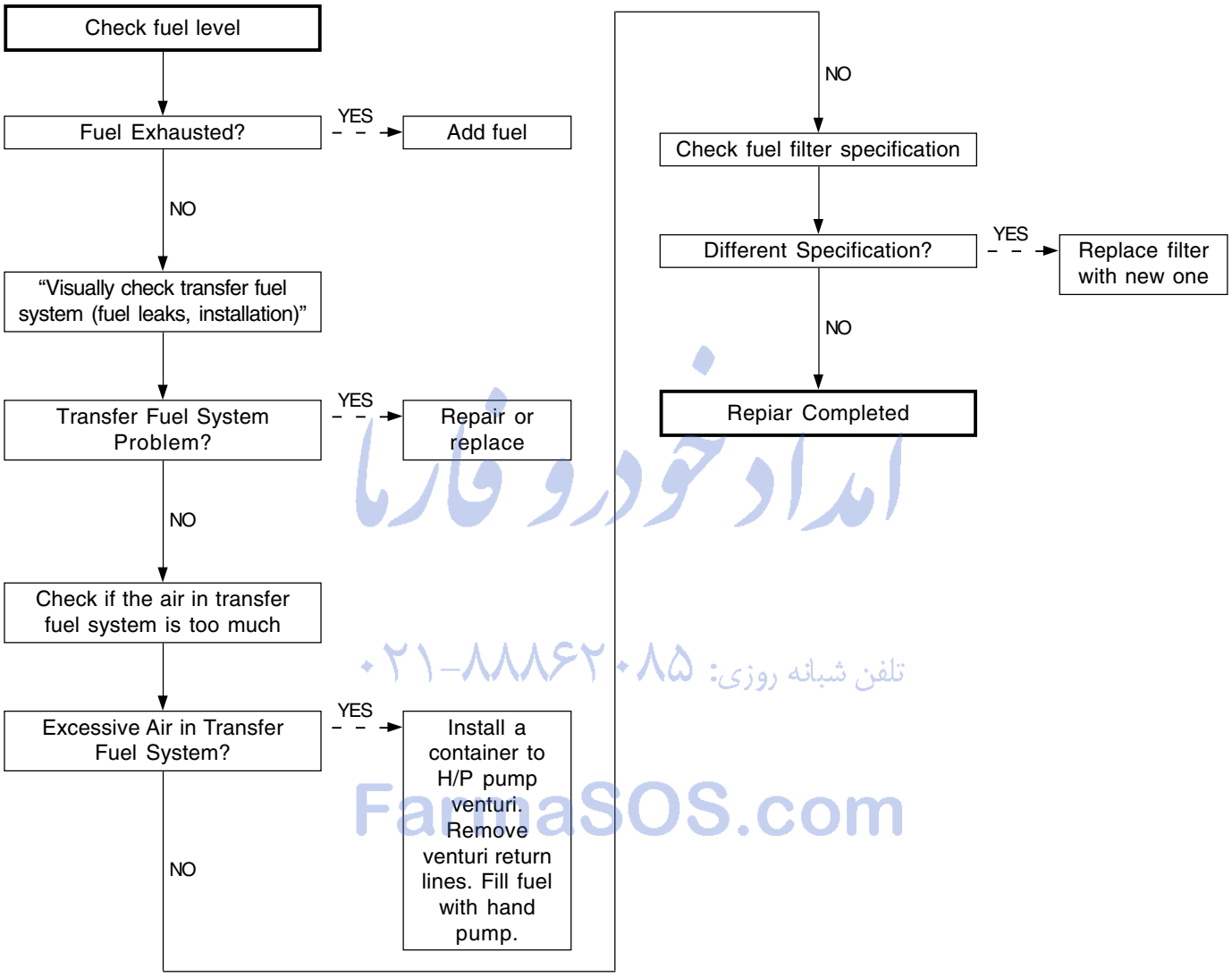

3. Diagnosis Procedures (High Pressure Fuel System)

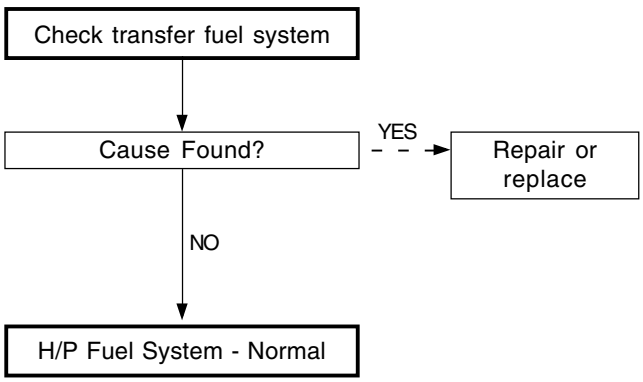

امداد خودرو فارنا
تلفن شبانه روزی: ۰۲۱-۸۸۸۶۲۰۸۵
FarnaSOS.com

Rail Pressure Control Fault (Too Slow Pressure Build Up while Cranking)

▶ Trouble Code and Symptom

Trouble Code		Symptom
P1191	Rail Pressure Build Up - Too Slow	Unable Accelerometer Decoding
		Unable Dynamic Leak of Injector #1
		Unable Dynamic Leak of Injector #2
		Unable Dynamic Leak of Injector #4
		Unable Dynamic Leak of Injector #5
		Unable Dynamic Leak of Injector #3
		Unable Cylinder Balancing
		Unable Accelerometer Learning Strategy
		Limited Rail Pressure Mode Operation

امداد خودرو فارما
تلفن شبانه روزی: ۰۲۱-۸۸۸۶۲۰۸۵
FarmaSOS.com

▶ Diagnosis Procedures

1. Diagnosis Procedures (Rail Pressure Control)

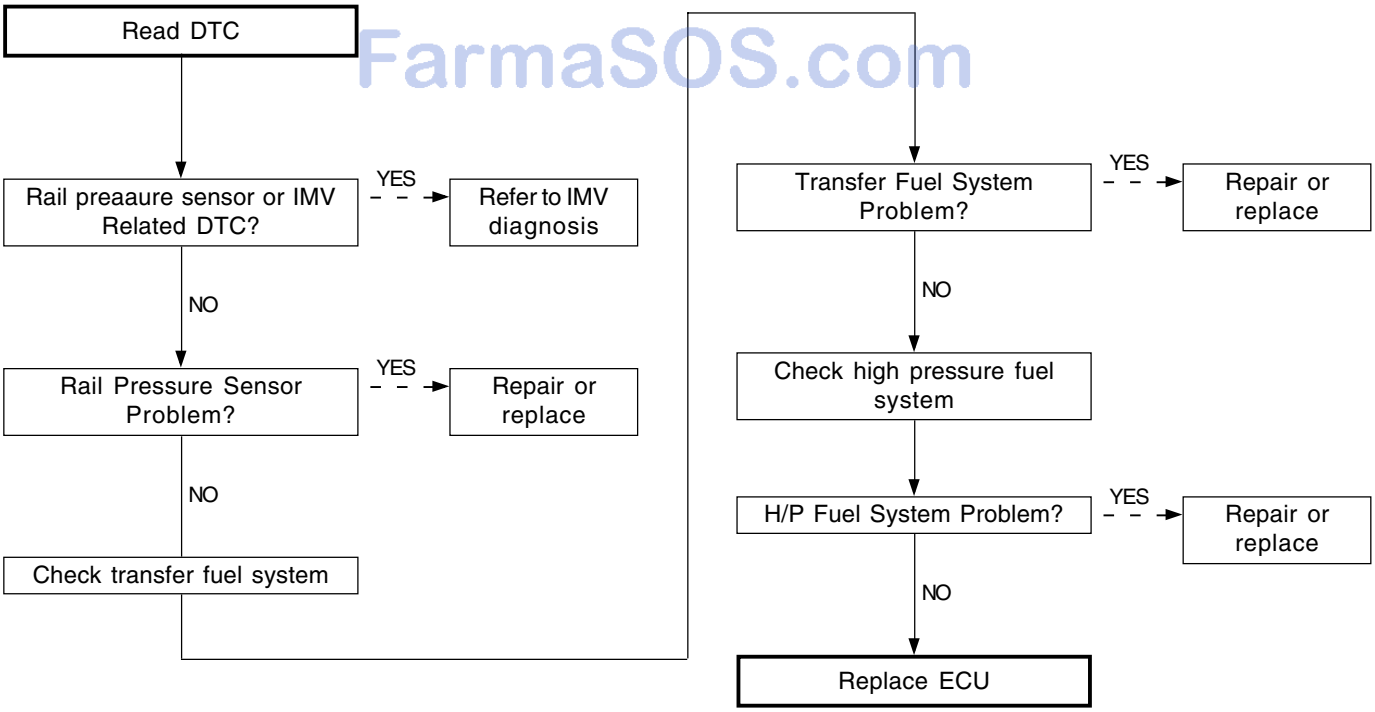

CHANGED BY	
EFFECTIVE DATE	
AFFECTED VIN	

2. Diagnosis Procedures (Transfer Fuel System)

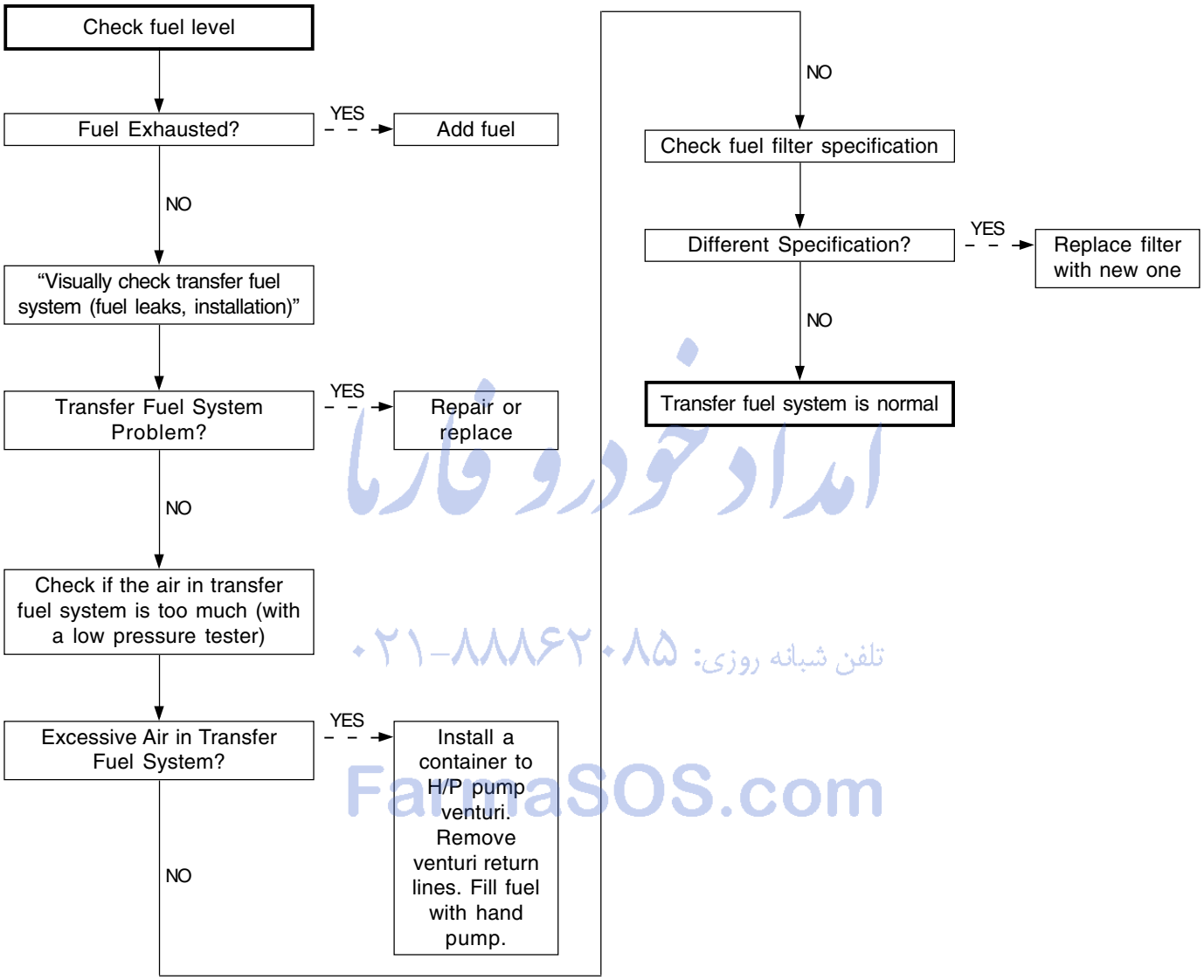

امداد خودرو فارنا
تلفن شبانه روزی: ۰۲۱-۸۸۸۶۲۰۸۵
FarnaSOS.com

3. Diagnosis Procedures (High Pressyre Fuel System)

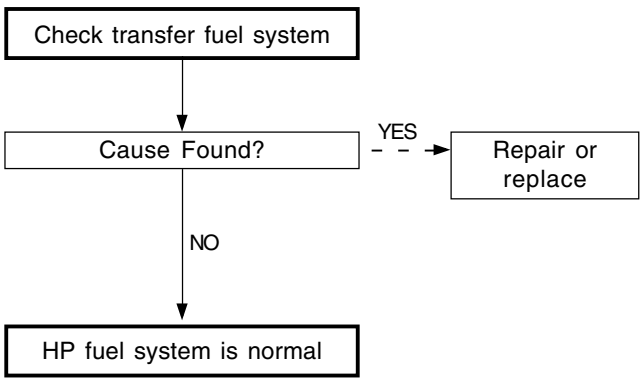

IMV Operation Fault (Electrical Fault)

▶ Trouble Code and Symptom

Trouble Code		Symptom
P0255	Open Circuit	Unable Accelerometer Decoding
P0251	Short Circuit	Delayed Engine Stop
P0253	Short to Ground	Unable Dynamic Leak of Injector #1
		Unable Dynamic Leak of Injector #2
		Unable Dynamic Leak of Injector #4
		Unable Dynamic Leak of Injector #5
		Unable Dynamic Leak of Injector #3
		Unable Cylinder Balancing
		Unable H/P Leak Detection
		Unable Accelerometer Learning Strategy
		Limited Rail Pressure Mode Operation

امداد خودرو فارما
تلفن شبانه روزی: ۰۲۱-۸۸۸۶۲۰۸۵
FarmaSOS.com

▶ Diagnosis Procedures

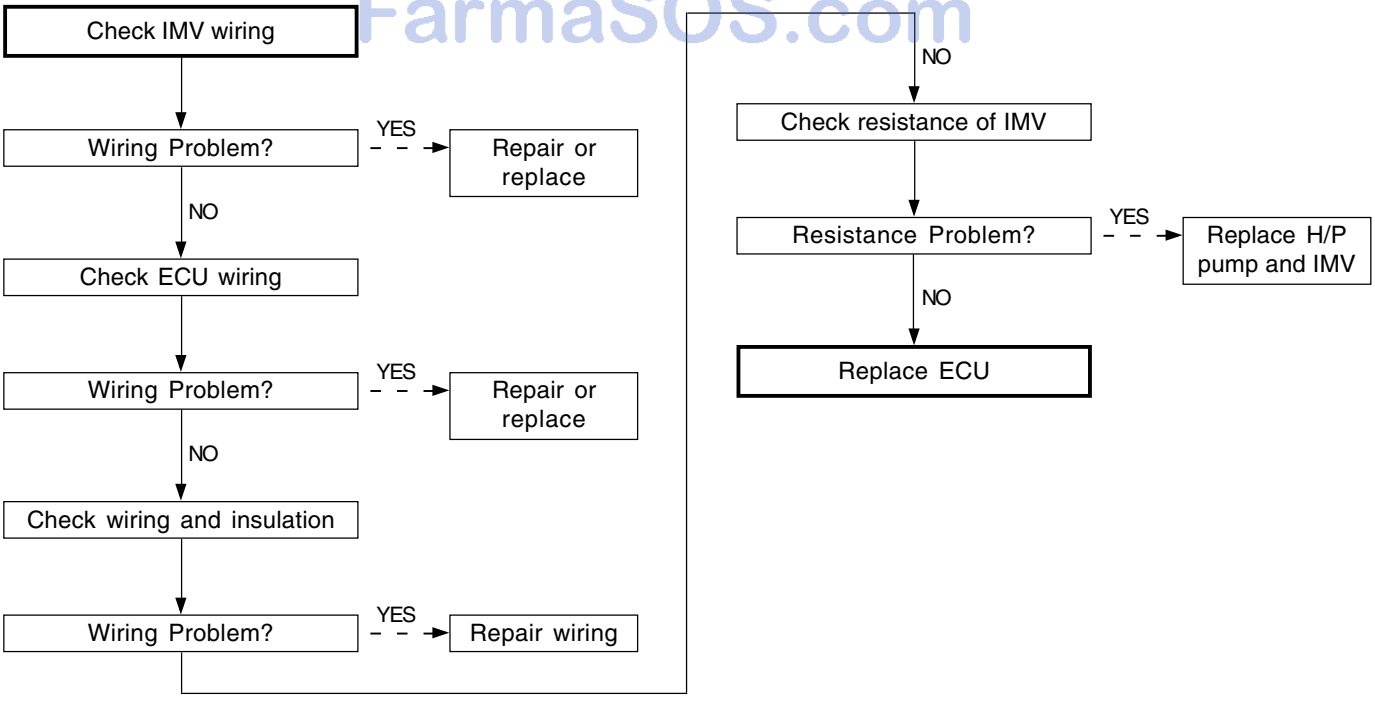

CHANGED BY	
EFFECTIVE DATE	
AFFECTED VIN	

Intake Air Temperature Sensor Fault (Electric Fault)

▶ Trouble Code and Symptom

Trouble Code		Symptom
P0112	High	MIL ON
P0113	Low	
P0110	Supply Voltage	

▶ Diagnosis Procedures

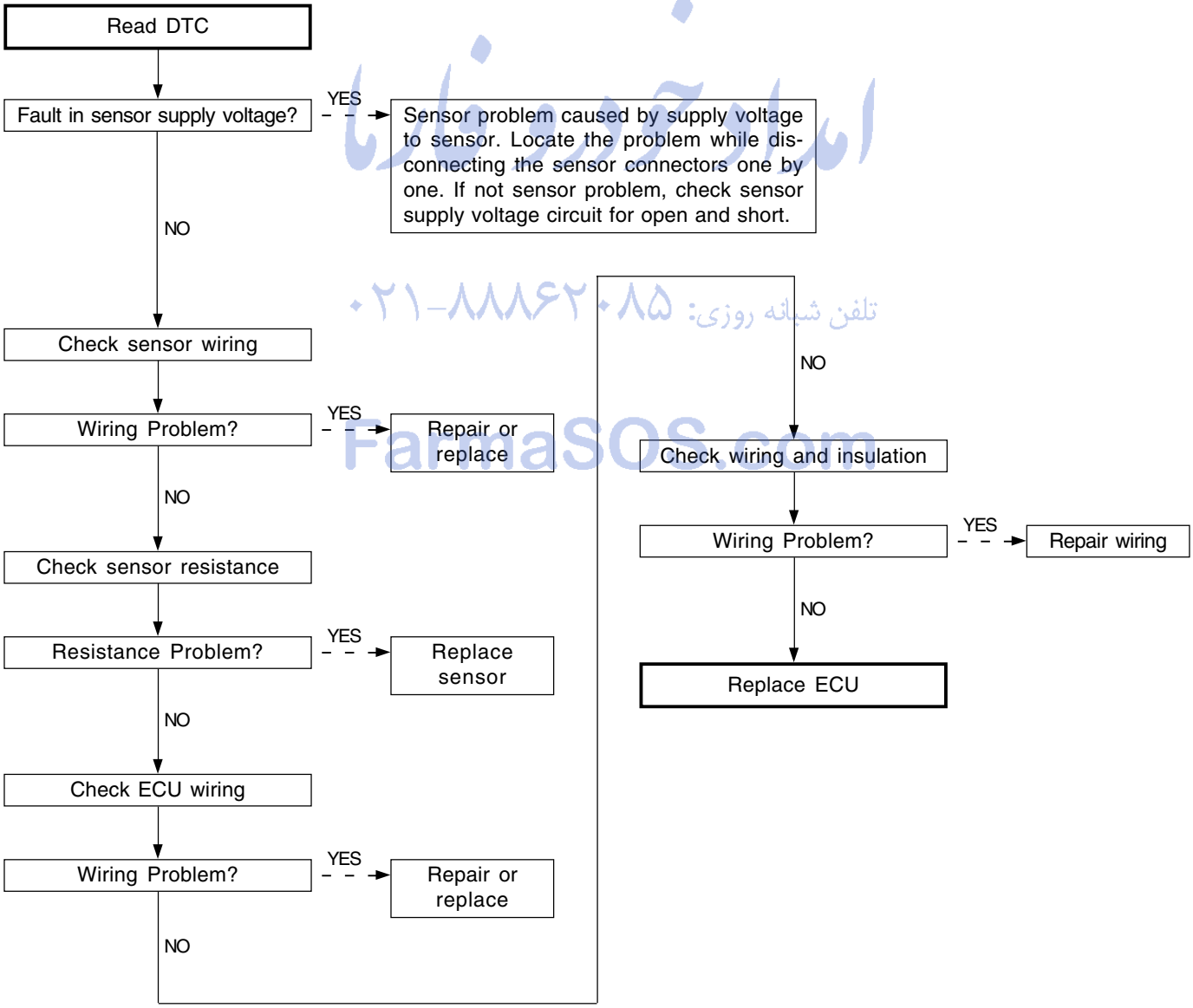

امداد خودرو ۰۲۱-۸۸۸۶۲۰۸۵ تلفن شبانه روزی: FarnaSOS.com

MDP Fault (Injector #1)

▶ Trouble Code and Symptom

Trouble Code		Symptom
P1171	#1 Injector MDP Fault	Unable Accelerometer Decoding
		MIL ON
		Unable Pilot and Post Injection
		Unable Dynamic Leak of Injector #1
		Torque Limit For Injector Drift
		Unable Accelerometer Learning Strategy

▶ Diagnosis Procedures

Enter the injector data into ECU after replacing injector

امداد خودرو فارما
تلفن شبانه روزی: ۰۲۱-۸۸۸۶۲۰۸۵
FarmaSOS.com

MDP Fault (Injector #2)

▶ Trouble Code and Symptom

Trouble Code		Symptom
P1172	#2 Injector MDP Fault	Unable Accelerometer Decoding
		MIL ON
		Unable Pilot and Post Injection
		Unable Dynamic Leak of Injector #2
		Torque Limit For Injector Drift
		Unable Accelerometer Learning Strategy

▶ Diagnosis Procedures

Enter the injector data into ECU after replacing injector

MDP Fault (Injector #4)

▶ Trouble Code and Symptom

Trouble Code		Symptom
P1174	#4 Injector MDP Fault	Unable Accelerometer Decoding
		MIL ON
		Unable Pilot and Post Injection
		Unable Dynamic Leak of Injector #4
		Torque Limit For Injector Drift
		Unable Accelerometer Learning Strategy

▶ Diagnosis Procedures

Enter the injector data into ECU after replacing injector

امداد خودرو فارما
تلفن شبانه روزی: ۰۸۵ ۰۲۱-۸۸۸۶۲
FarmaSOS.com

MDP Fault (Injector #5)

▶ Trouble Code and Symptom

Trouble Code		Symptom
P1175	#5 Injector MDP Fault	Unable Accelerometer Decoding
		MIL ON
		Unable Pilot and Post Injection
		Unable Dynamic Leak of Injector #5
		Torque Limit For Injector Drift
		Unable Accelerometer Learning Strategy

▶ Diagnosis Procedures

Enter the injector data into ECU after replacing injector

MDP Fault (Injector #3)

▶ Trouble Code and Symptom

Trouble Code		Symptom
P1173	#3 Injector MDP Fault	Unable Accelerometer Decoding
		MIL ON
		Unable Pilot and Post Injection
		Unable Dynamic Leak of Injector #3
		Torque Limit For Injector Drift
		Unable Accelerometer Learning Strategy

▶ Diagnosis Procedures

Enter the injector data into ECU after replacing injector

امداد خودرو فارما
تلفن شبانه روزی: ۰۲۱-۸۸۸۶۲۰۸۵
FarmaSOS.com

Rail Pressure Fault (Too High)

▶ Trouble Code and Symptom

Trouble Code		Symptom
P1252	Too High IMV Pressure	

▶ Diagnosis Procedures

1. Diagnosis Procedures (Rail Pressure Control)

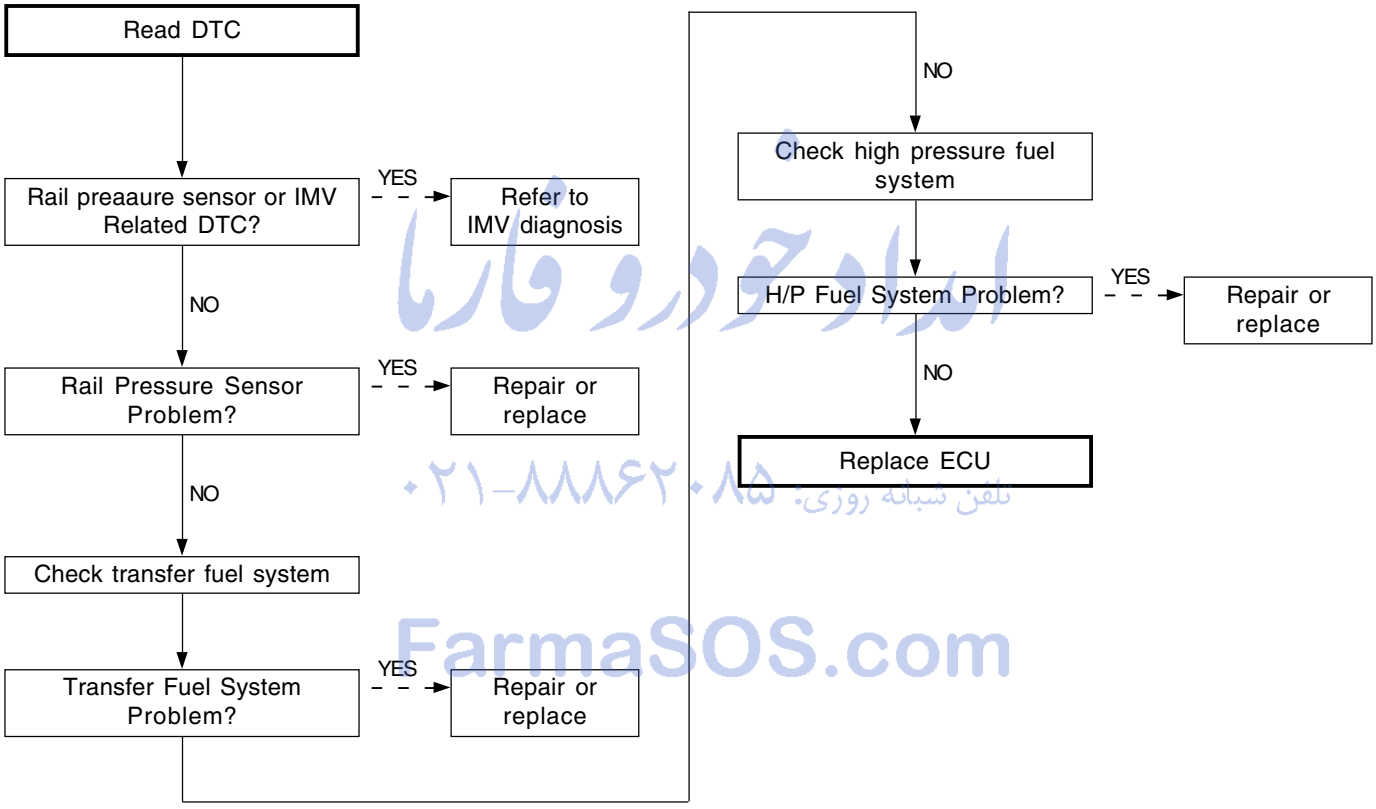

امداد خودرو فارما
۰۲۱-۸۸۸۶۲۰۸۵ تلفن شبانه روزی
FarmaSOS.com

2. Diagnosis Procedures (Transfer Fuel System)

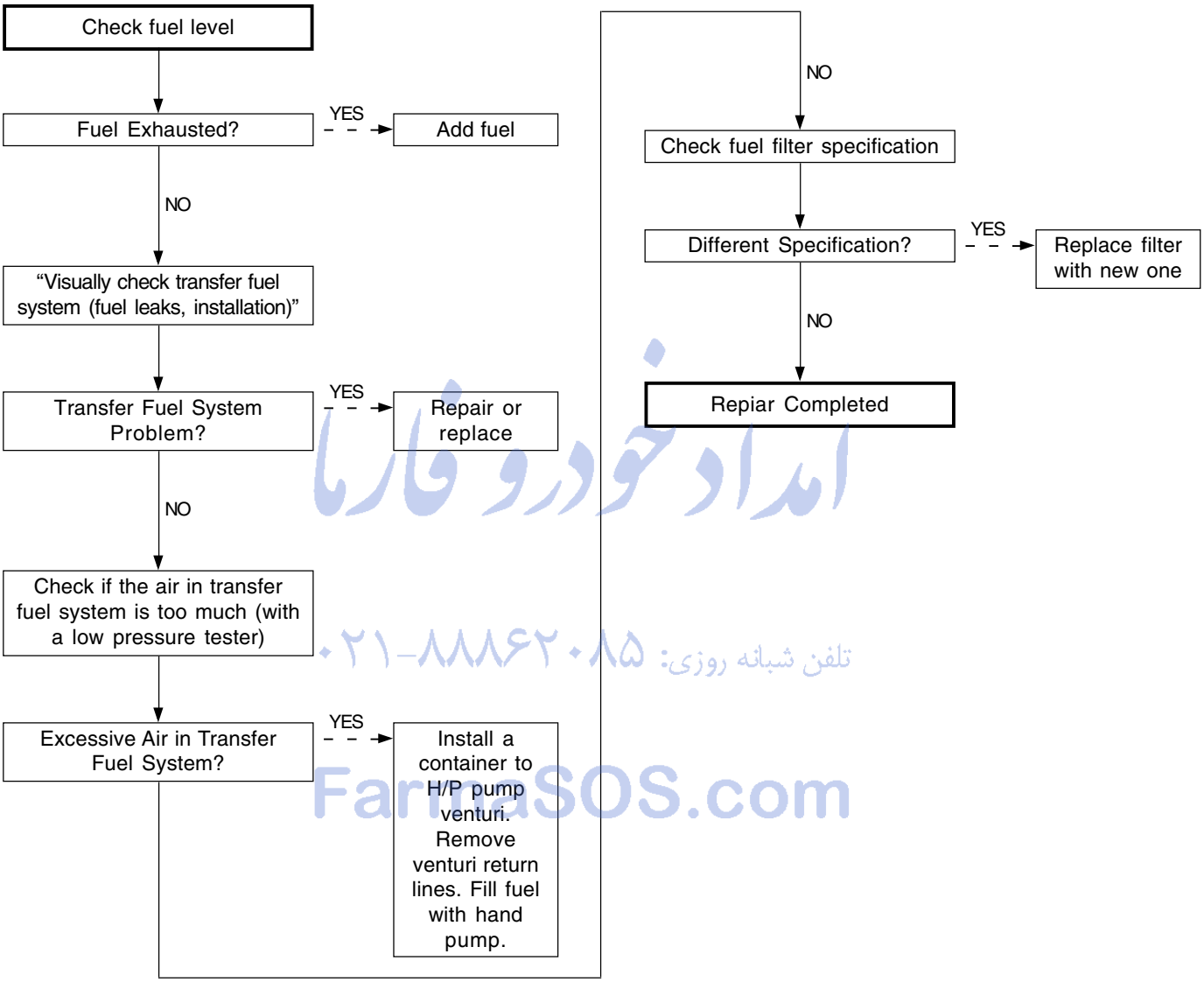

امداد خودرو فارما
تلفن شبانه روزی: ۰۲۱-۸۸۸۶۲۰۸۵
FarmaSOS.com

3. Diagnosis Procedures (High Pressyre Fuel System)

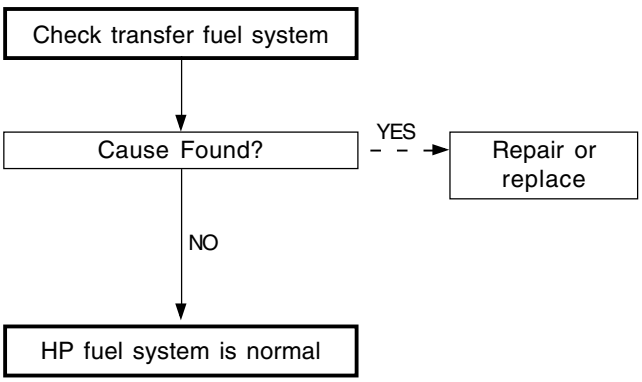

CHANGED BY	
EFFECTIVE DATE	
AFFECTED VIN	

Accelerator Pedal Sensor Malfunction (Relationship between Track 1 and Track 2)

▶ Trouble Code and Symptom

Trouble Code		Symptom
P1120	Accelerator Pedal Sensor 1 Malfunction	Unable Cruise Control
P1121	Accelerator Pedal Sensor 2 Malfunction	
		Torque Reduction Mode Operation

▶ Diagnosis Procedures

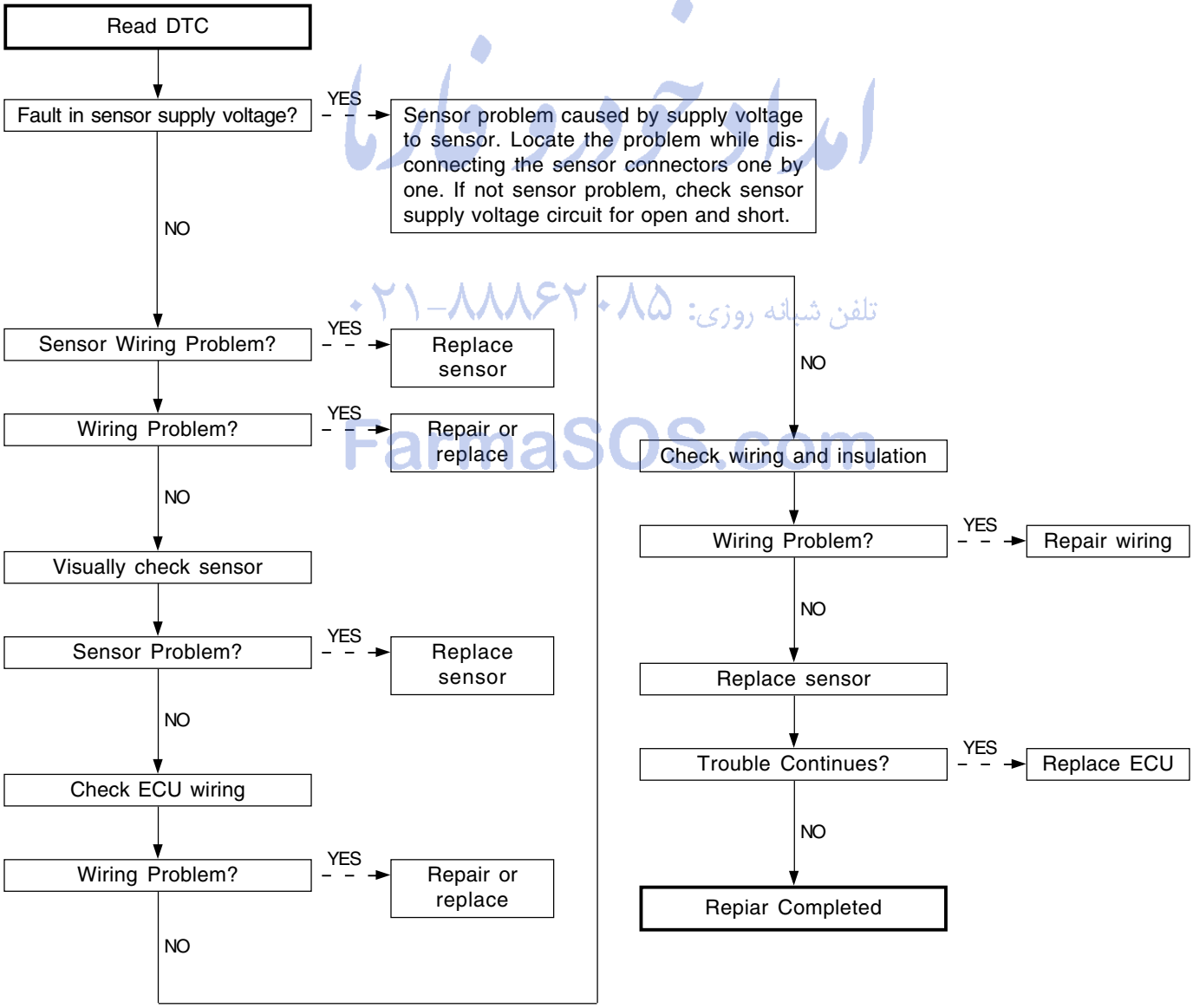

امداد خودرو ایران
تلفن شبانه روزی: ۰۲۱-۸۸۸۶۲۰۸۵
FarnaSOS.com

Accelerator Pedal Sensor Malfunction (Limp Home Mode Operation)

▶ Trouble Code and Symptom

Trouble Code		Symptom
P1122	Accelerator Pedal Sensor Malfunction (Limp Home Mode)	MIL ON
		Limp Home Mode Operation

▶ Diagnosis Procedures

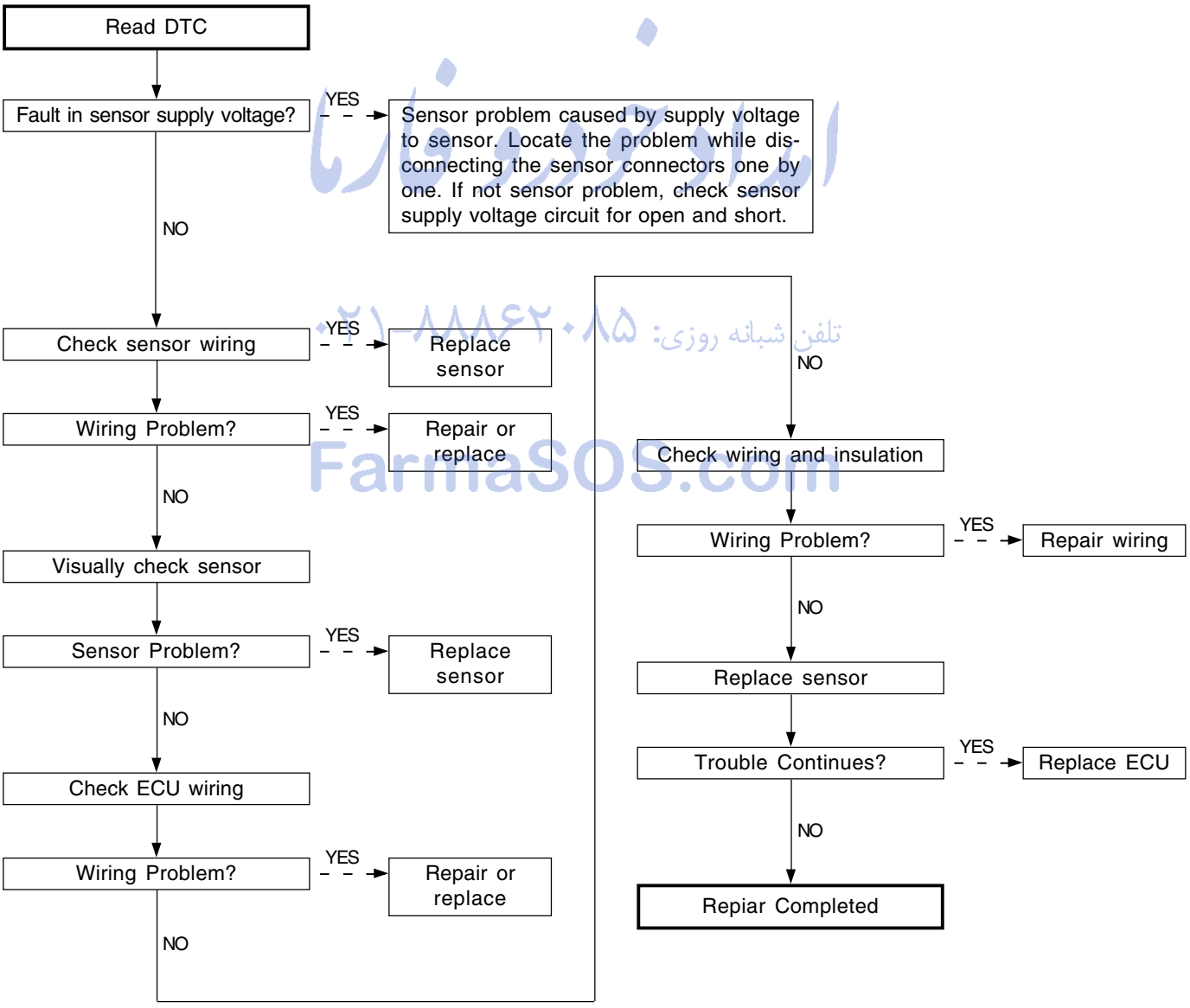

FarmaSOS.com
تلفن شبانه روزی: ۰۲۱-۸۸۸۶۲۰۸۵

CHANGED BY	
EFFECTIVE DATE	
AFFECTED VIN	

Accelerator Pedal Sensor Malfunction (Torque Reduction Mode Operation)

▶ Trouble Code and Symptom

Trouble Code		Symptom
P1123	Accelerator Pedal Sensor Malfunction (Torque Mode)	MIL ON
		Torque Reduction Mode Operation

▶ Diagnosis Procedures

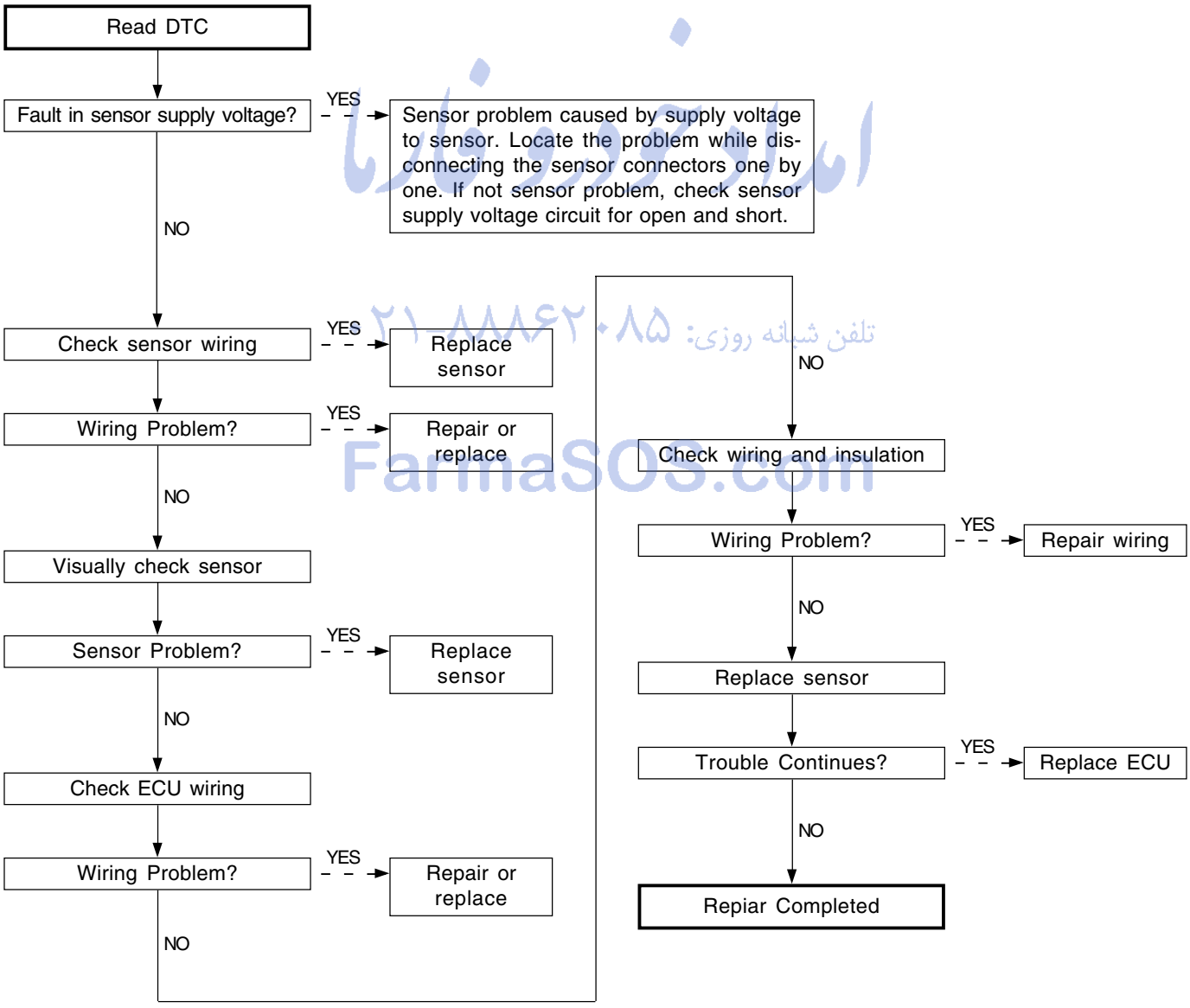

FarmaSOS.com
تلفن شبانه روزی: ۰۸۵ ۸۸۸۶۲۰۲۱

Accelerator Pedal Sensor Malfunction (Electrical Fault, Pedal Stuck)

▶ Trouble Code and Symptom

Trouble Code		Symptom
P1124	Accelerator Pedal Sensor Malfunction - Stuck	Unable Cruise Control
		Limp Home Mode Operation

▶ Diagnosis Procedures

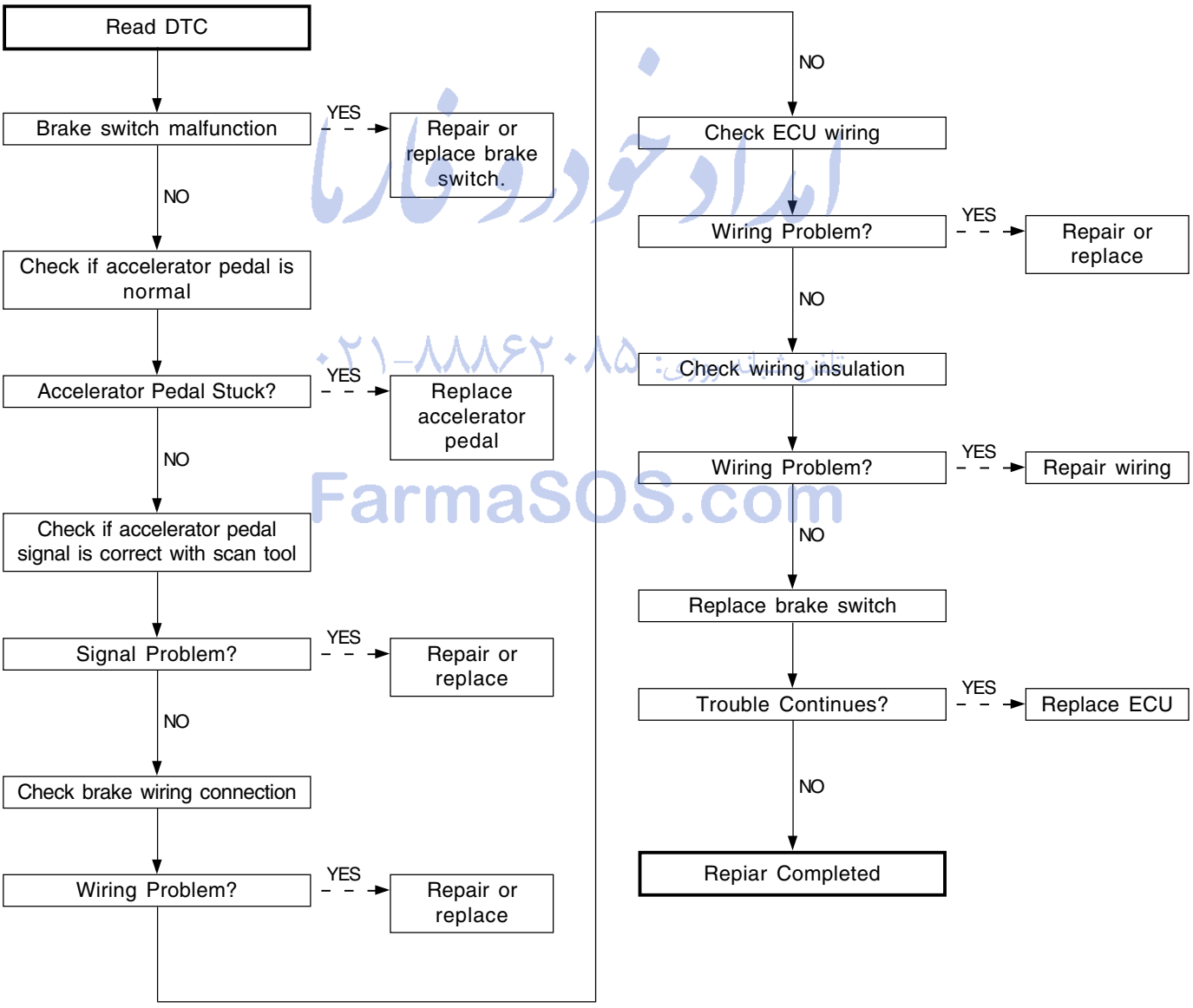

ایراد خودروفارما
۰۲۱-۸۸۸۶۲۰۸۵
FarmaSOS.com

CHANGED BY	
EFFECTIVE DATE	
AFFECTED VIN	

Accelerator Pedal Sensor Malfunction (Electrical Fault, Track 1)

▶ Trouble Code and Symptom

Trouble Code		Symptom
P0122	Low	MIL ON
P0123	High	Unable Cruise Control
P0120	Supply Voltage	Limp Home Mode Operation

▶ Diagnosis Procedures

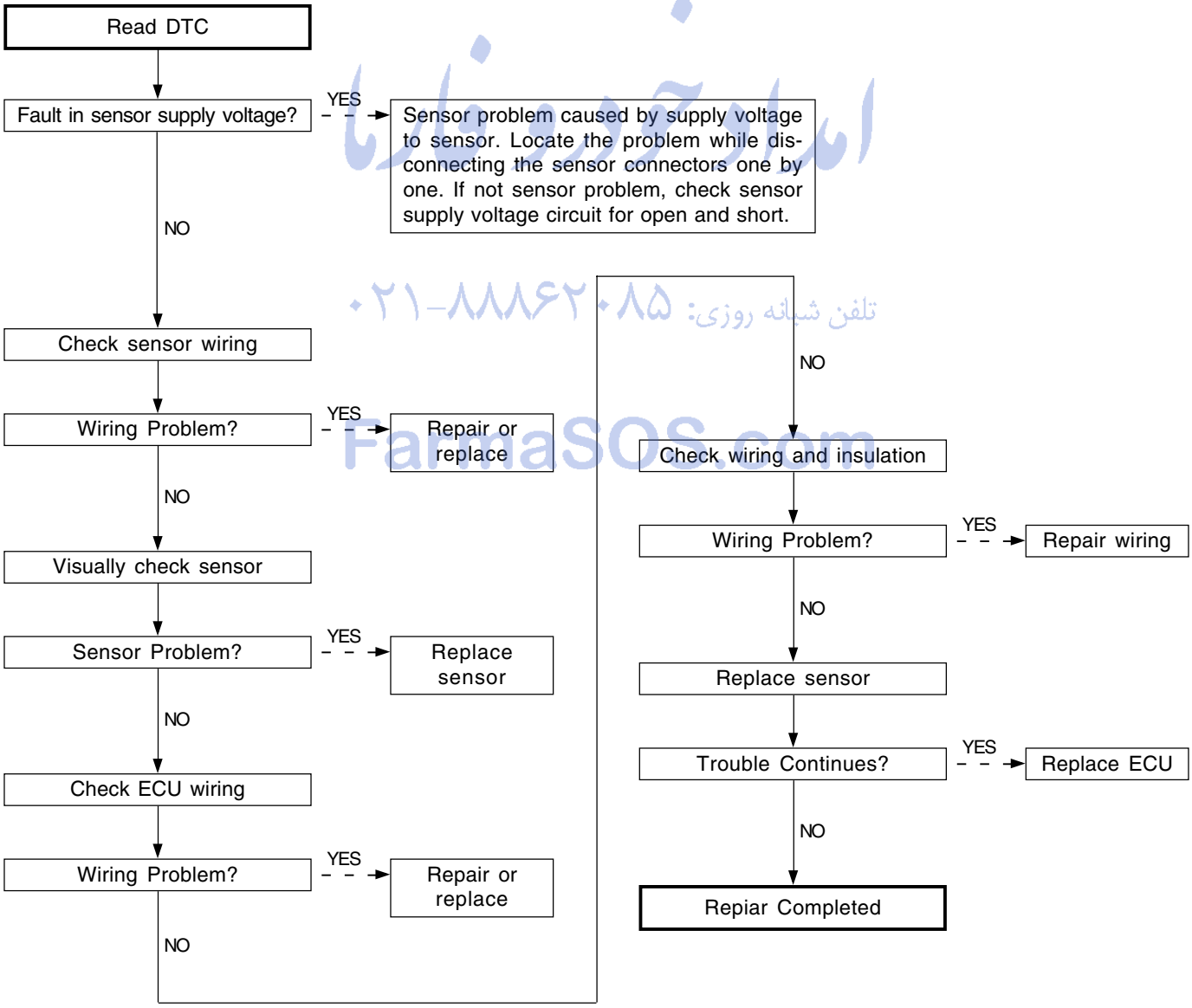

امداد خودرو تلفن شبانه روزی: ۰۲۱-۸۸۸۶۲۰۸۵ FarnaSOS.com

Accelerator Pedal Sensor Malfunction (Electrical Fault, Track 2)

▶ Trouble Code and Symptom

Trouble Code		Symptom
P0222	Low	MIL ON
P0223	High	Unable Cruise Control
P0220	Supply Voltage	Torque Reduction Mode Operation

▶ Diagnosis Procedures

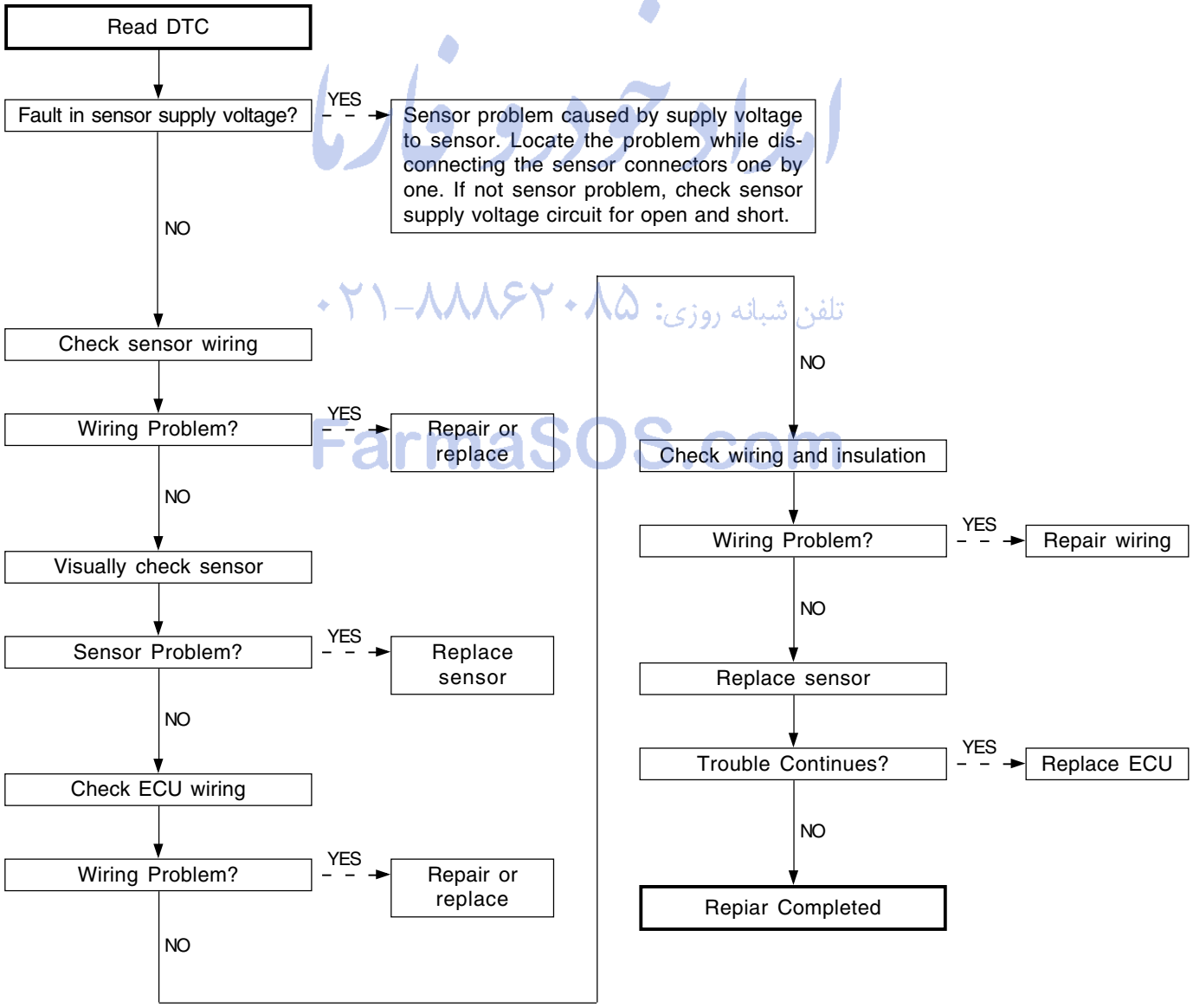

ایران خودرو فارما
تلفن شبانه روزی: ۰۲۱-۸۸۸۶۲۰۸۵
FarmaSOS.com

CHANGED BY	
EFFECTIVE DATE	
AFFECTED VIN	

Fuel Rail Pressure Sensor Malfunction (Out of Range, ADC or Vref)

▶ Trouble Code and Symptom

Trouble Code		Symptom
P0192	Low	Unable Pilot and Post Injection
P0193	High	Unable Dynamic Leak of Injector #1
P0190	Supply Voltage	Unable Dynamic Leak of Injector #2
P0191	Excessive Pressure Drop	Unable Dynamic Leak of Injector #4
		Unable Dynamic Leak of Injector #5
		Unable Dynamic Leak of Injector #3
		Unable RPC Trim Fault Detection
		Unable Cylinder Balancing
		Unable H/P Leak Detection
		Unable Accelerometer Learning Strategy
		Fully Forced Open IMV
		Limited Rail Pressure Mode Operation
		Unable High Rail Pressure Detection
		Torque Reduction Mode Operation

امداد خودرو فارما
۰۲۱-۸۸۸۶۲۰۸۵
FarmaSOS.com

▶ Diagnosis Procedures

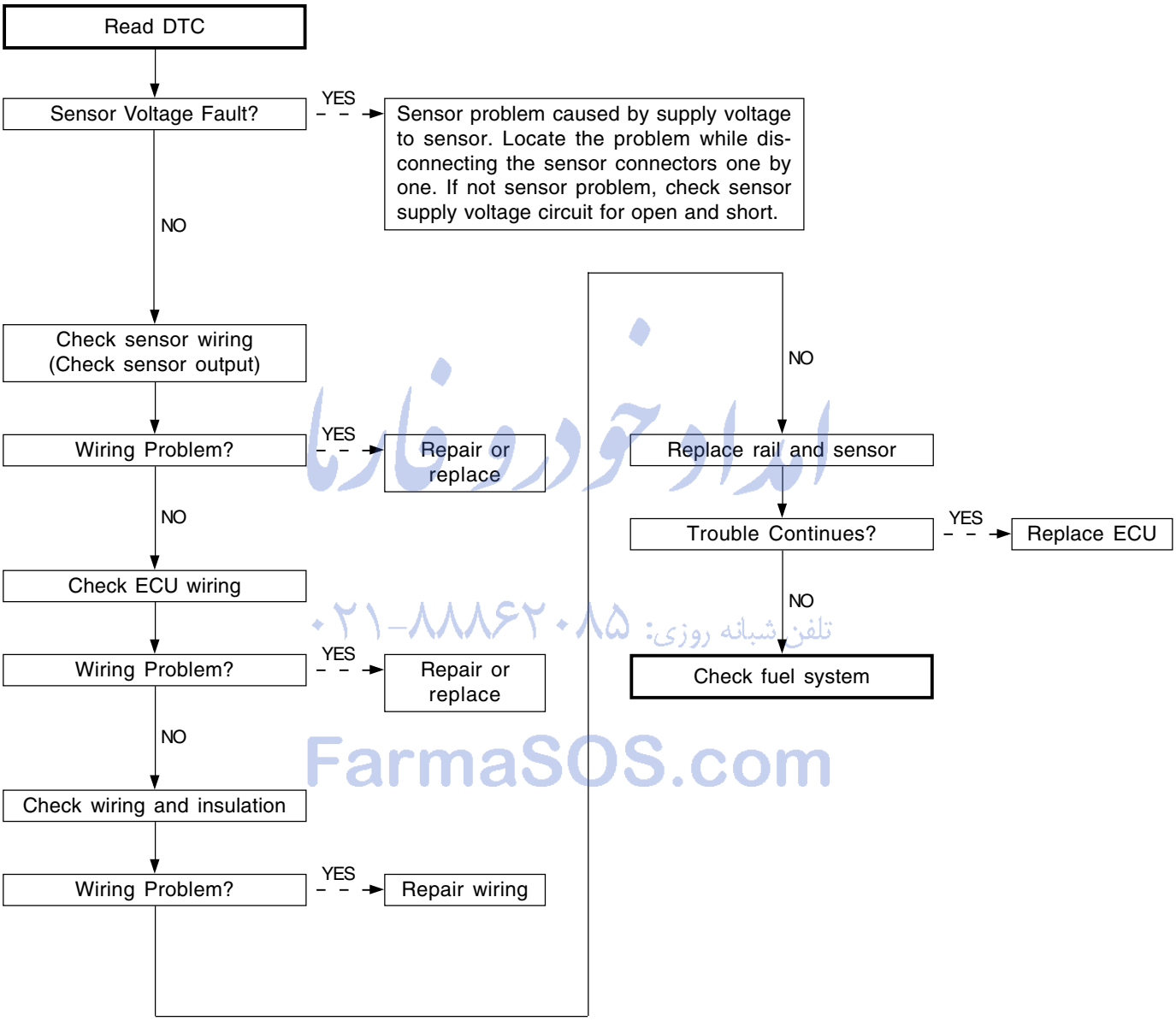

امداد خودرو فارما
تلفن شبانه روزی: ۰۲۱-۸۸۸۶۲۰۸۵
FarmaSOS.com

CHANGED BY	
EFFECTIVE DATE	
AFFECTED VIN	

Fuel Rail Pressure Sensor Malfunction (Out of Range when Key ON)

▶ Trouble Code and Symptom

Trouble Code		Symptom
P1192	Low	Unable Pilot and Post Injection
P1193	High	Unable Dynamic Leak of Injector #1
P1190	Supply Voltage	Unable Dynamic Leak of Injector #2
		Unable Dynamic Leak of Injector #4
		Unable Dynamic Leak of Injector #5
		Unable Dynamic Leak of Injector #3
		Unable RPC Trim Fault Detection
		Unable Cylinder Balancing
		Unable H/P Leak Detection
		Unable Accelerometer Learning Strategy
		Fully Forced Open IMV
		Limited Rail Pressure Mode Operation
		Unable High Rail Pressure Detection
		Torque Reduction Mode Operation

امداد خودرو فارما
۰۲۱-۸۸۸۶۲۰۸۵
FarmaSOS.com

▶ Diagnosis Procedures

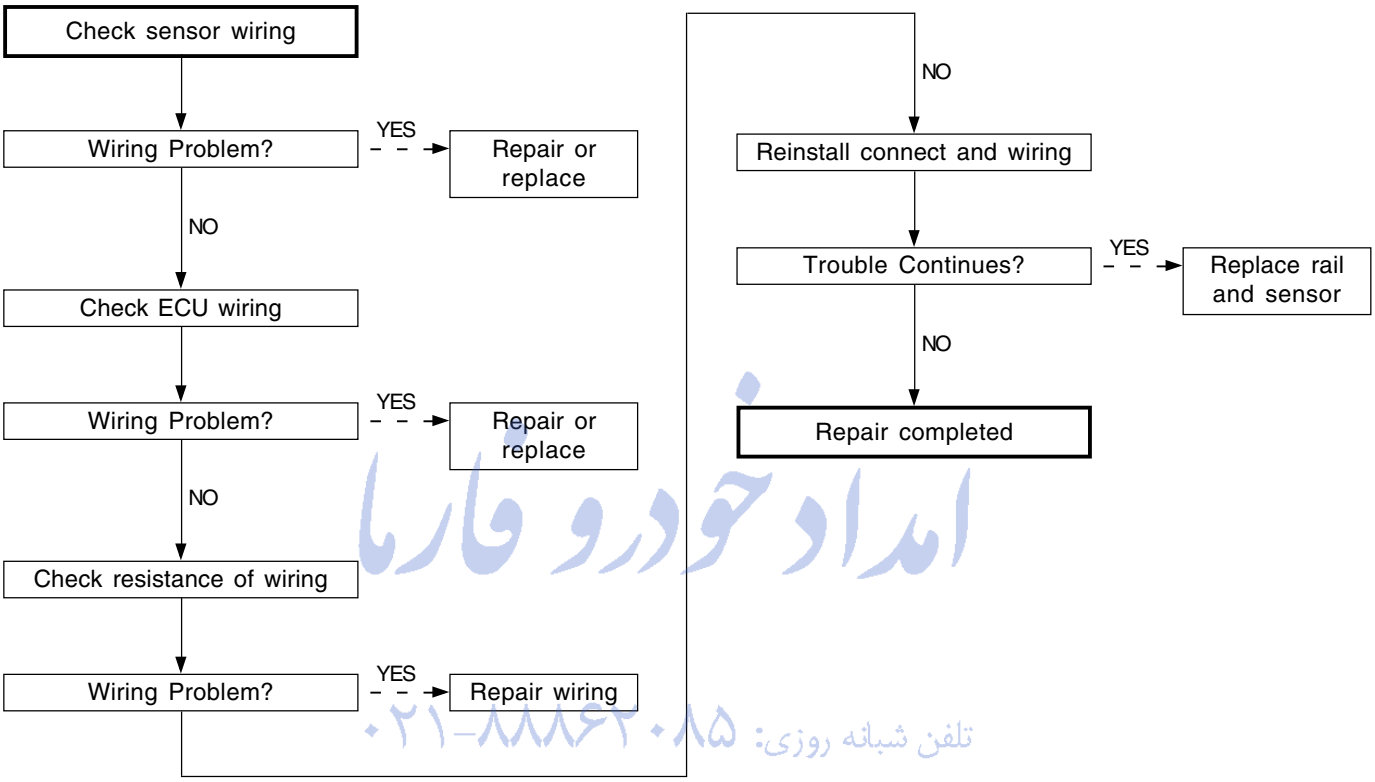

امداد خودرو فارما
تلفن شبانه روزی: ۰۲۱-۸۸۸۶۲۰۸۵
FarmaSOS.com

Main Relay Malfunction - Stuck

▶ Trouble Code and Symptom

Trouble Code		Symptom
P0215	Main Relay Malfunction- Stuck	MIL ON

▶ Diagnosis Procedures

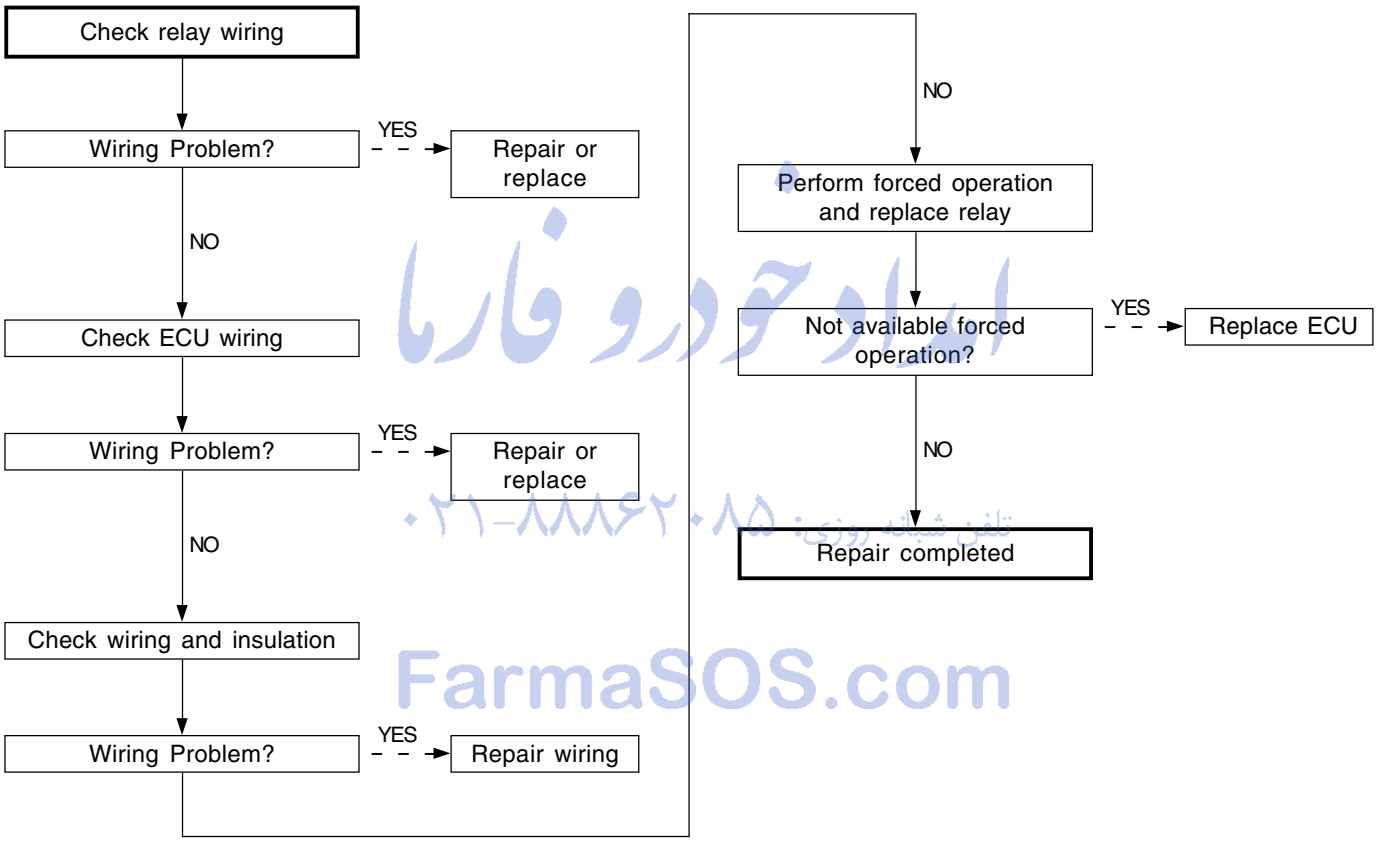

ایران خودرو فارما
تلفن شبانه روزی: ۰۲۱-۸۸۸۶۲۰۸۵
FarmaSOS.com

Vehicle Speed Fault

▶ Trouble Code and Symptom

Trouble Code		Symptom
P1500	Vehicle Speed Fault	Unable Cruise Control

▶ Diagnosis Procedures

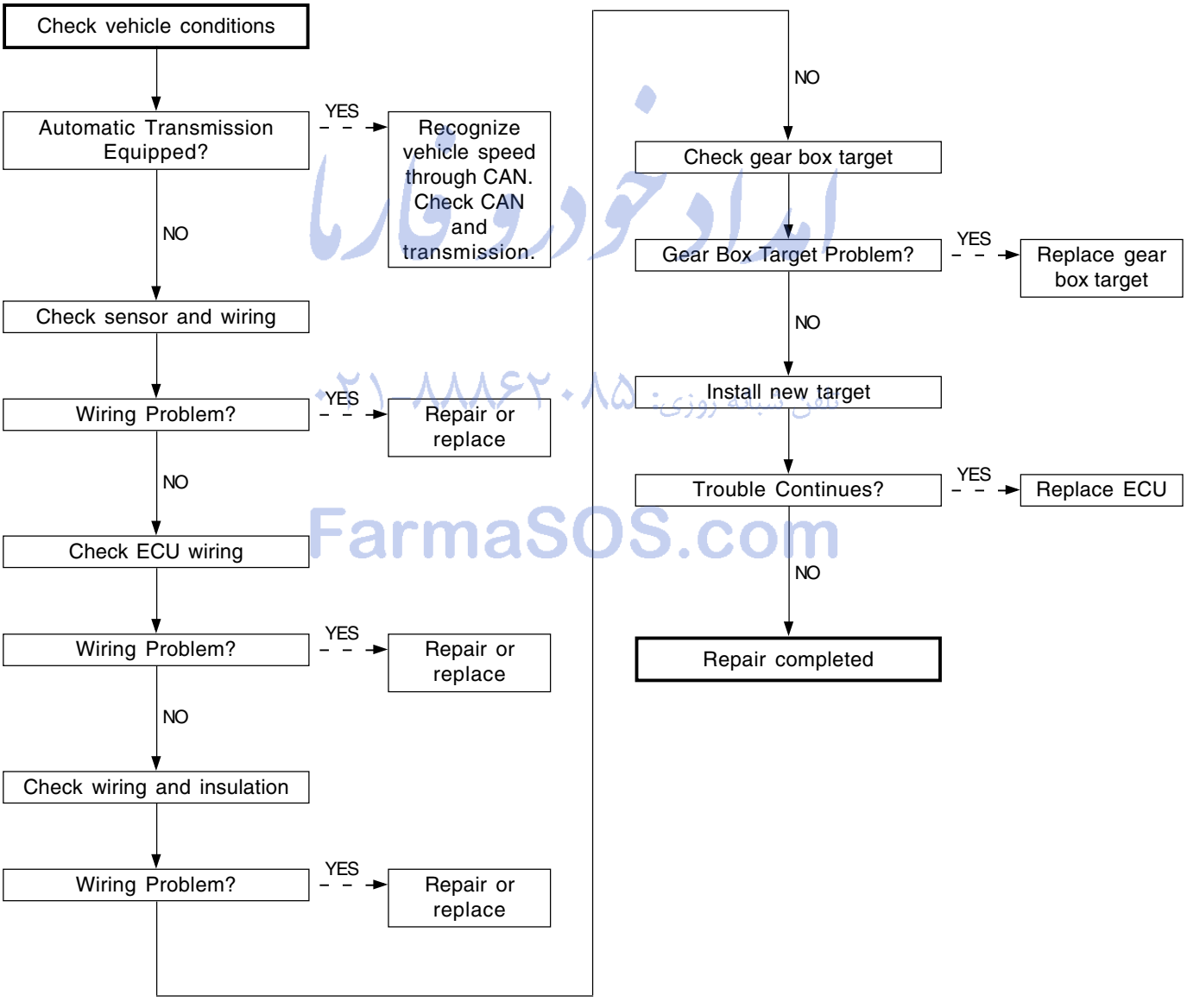

ایران خودرو فارما
FarmaSOS.com

CHANGED BY	
EFFECTIVE DATE	
AFFECTED VIN	

5V Supply Voltage 1 Fault

▶ Trouble Code and Symptom

Trouble Code		Symptom
P0642	Low	Unable Cruise Control
P0643	High	
P0641	Supply Voltage	

▶ Diagnosis Procedures

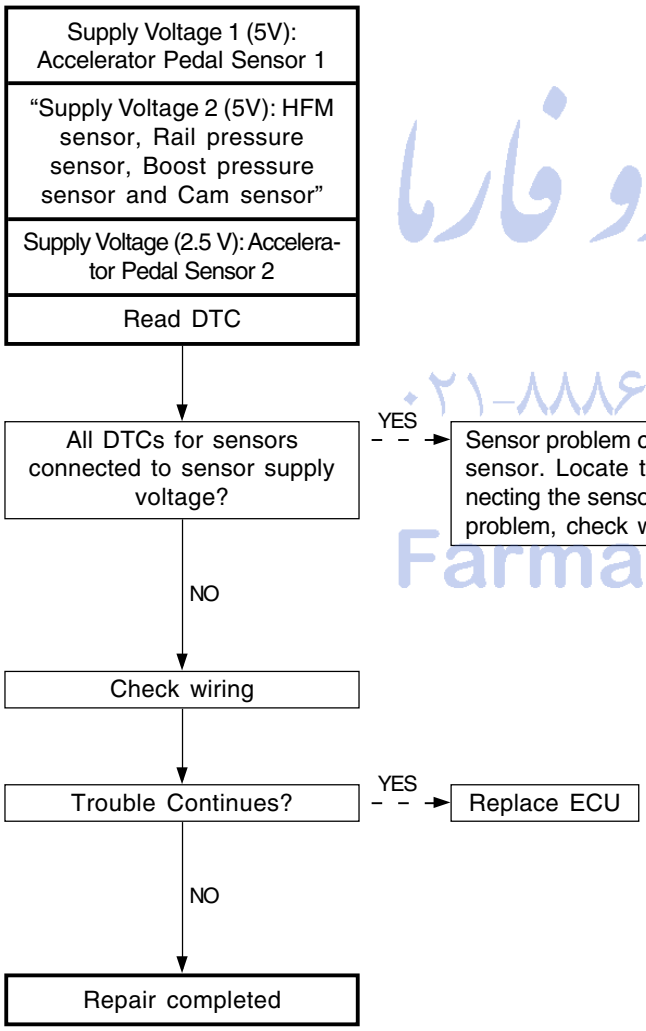

امداد خودرو فارما
تلفن شبانه روزی: ۰۲۱-۸۸۸۶۲۰۸۵
FarmaSOS.com

5V Supply Voltage 2 Fault

▶ Trouble Code and Symptom

Trouble Code		Symptom
P0652	Low	
P0653	High	
P0651	Supply Voltage	

▶ Diagnosis Procedures

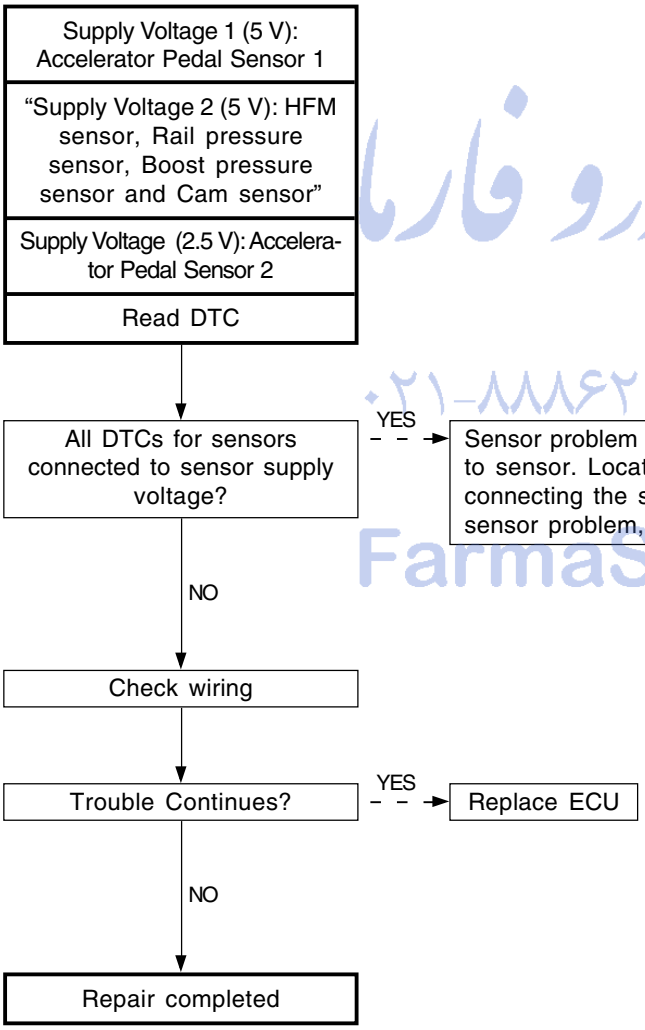

امداد خودرو فارما
تلفن شبانه روزی: ۰۲۱-۸۸۸۶۲۰۸۵
FarmaSOS.com

CHANGED BY	
EFFECTIVE DATE	
AFFECTED VIN	

2.5V Supply Voltage Fault

▶ Trouble Code and Symptom

Trouble Code		Symptom
P0698	Low	Unable Cruise Control
P0699	High	
P0697	Supply Voltage	

▶ Diagnosis Procedures

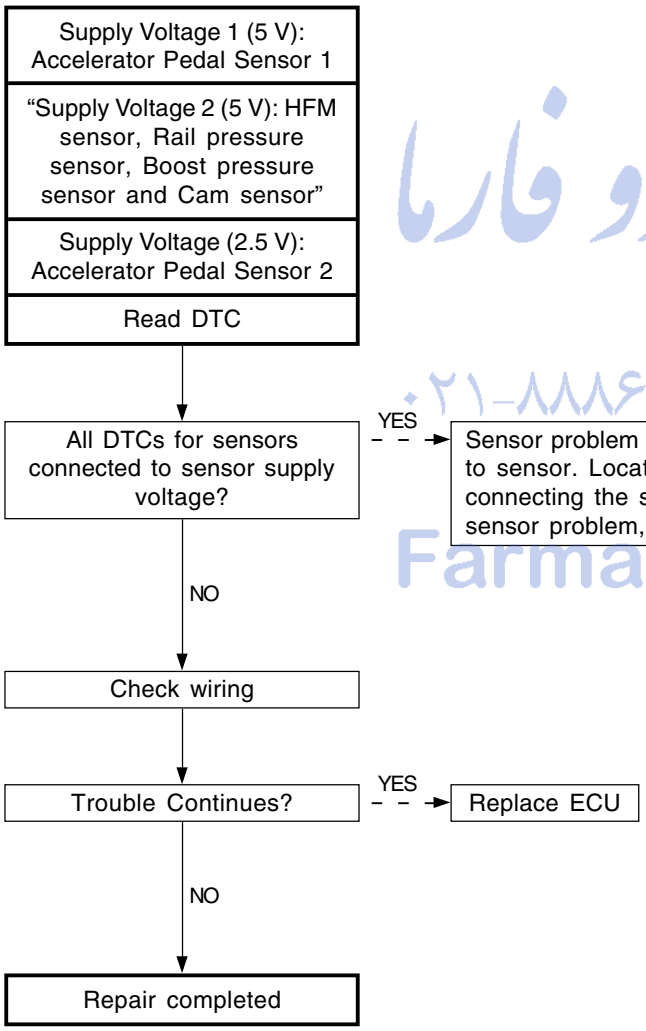

امداد خودرو فارما
تلفن شبانه روزی: ۰۲۱-۸۸۸۶۲۰۸۵
FarmaSOS.com

Turbo Charger Actuator Operation Fault (signal)

▶ Trouble Code and Symptom

Trouble Code		Symptom
P0245	Short to GND	Unable Cruise Control
P0246	Short Circuit to B+	Unable VGT Operation

▶ Diagnosis Procedures

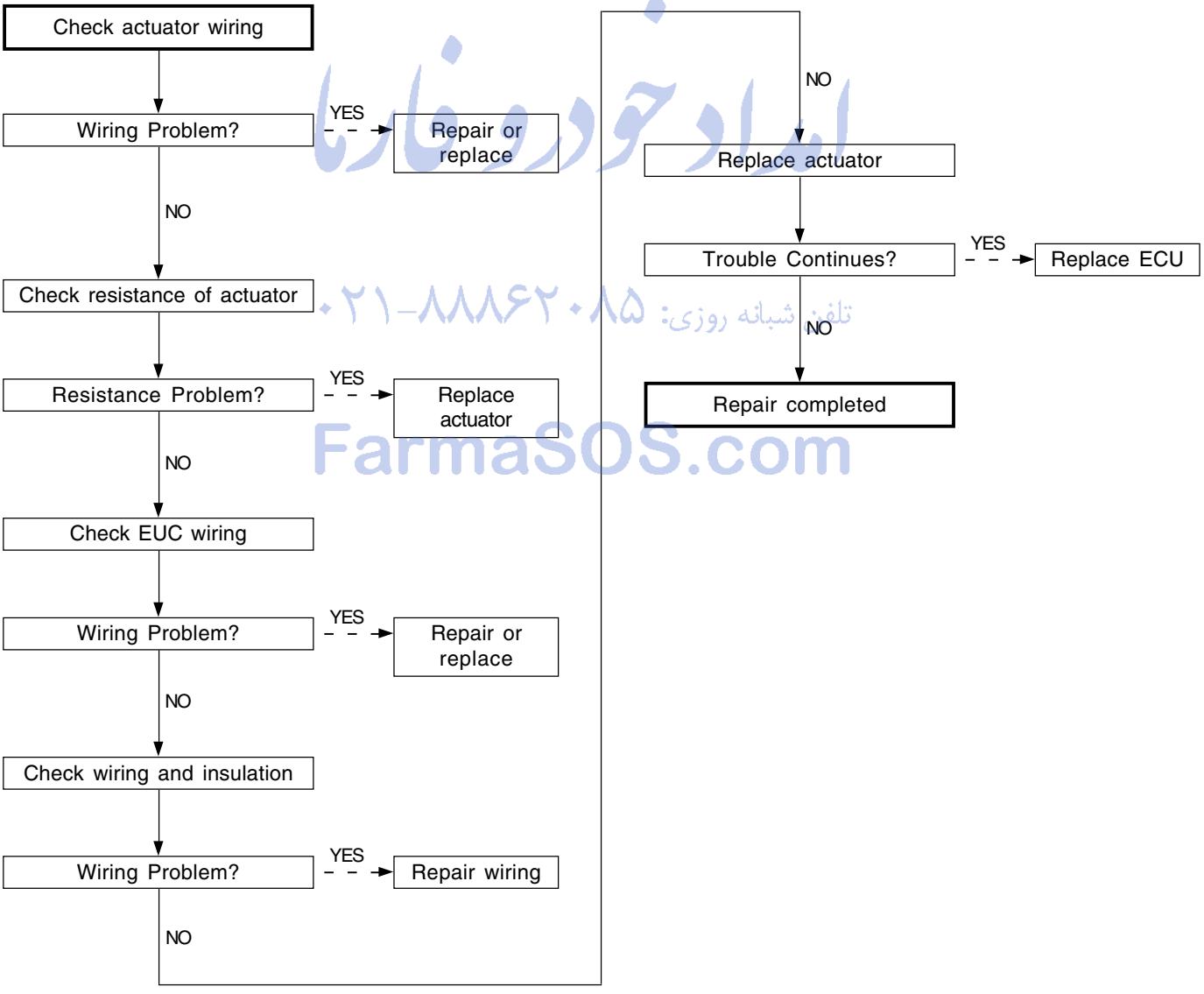

FarmaSOS.com
۰۲۱-۸۸۸۶۲۰۸۵ تلفن شبانه روزی:

CHANGED BY	
EFFECTIVE DATE	
AFFECTED VIN	

ECU Watchdog Fault

▶ Trouble Code and Symptom

Trouble Code		Symptom
P0606	ECU Watchdog Fault	

▶ Diagnosis Procedures

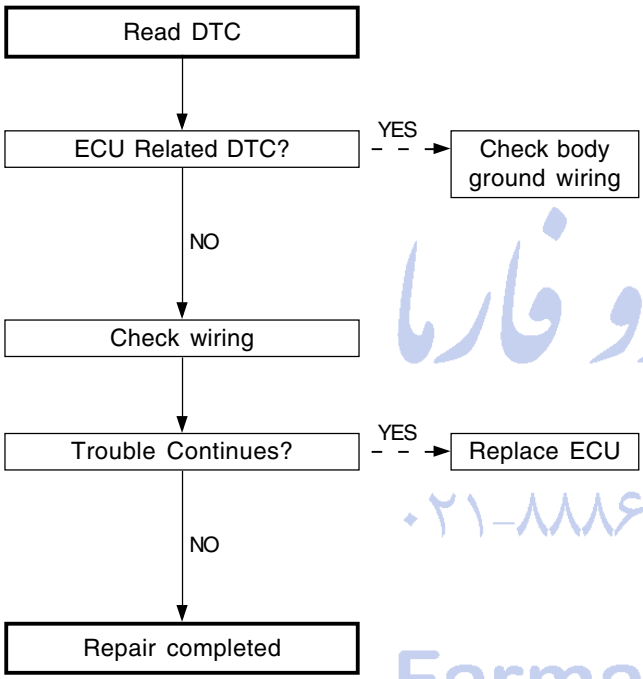

امداد خودرو فارما
تلفن شبانه روزی: ۰۲۱-۸۸۸۶۲۰۸۵
FarmaSOS.com

ECU Watchdog Fault (Injector Cut-off)

▶ Trouble Code and Symptom

Trouble Code		Symptom
P1607	ECU Injector Cut-off	

▶ Diagnosis Procedures

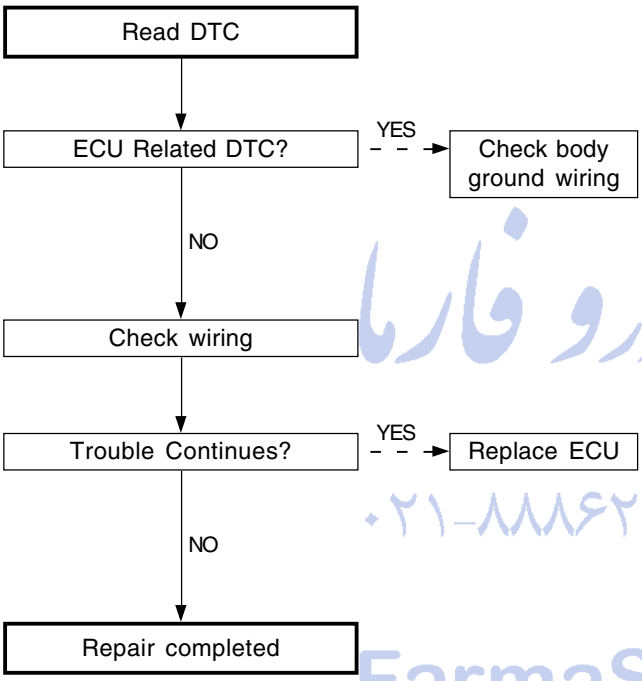

امداد خودرو فارما
تلفن شبانه روزی: ۰۲۱-۸۸۸۶۲۰۸۵
FarmaSOS.com

ECU Watchdog Fault (Watchdog Trip)

▶ Trouble Code and Symptom

Trouble Code		Symptom
P1600	Trip TPU Write Fault	
P1601	Trip Shut Dowm Write Fault	
P1602	Trip Noise Write Fault	

▶ Diagnosis Procedures

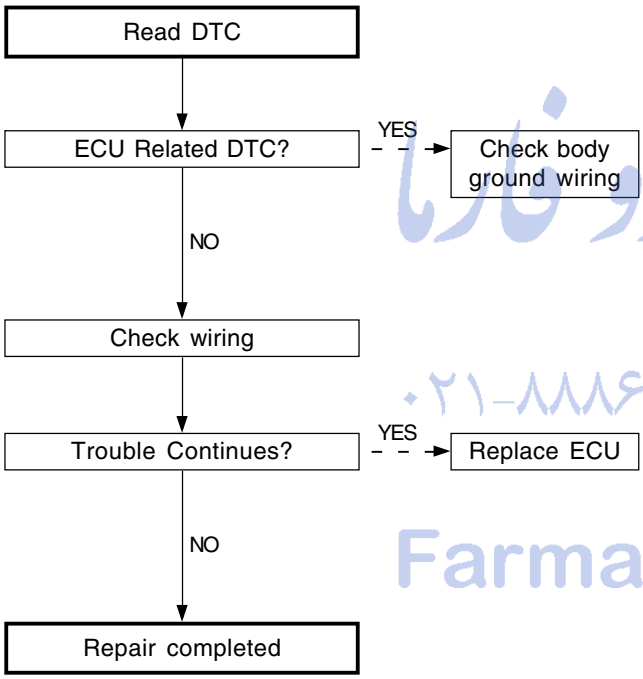

امداد خودرو فارما
تلفن شبانه روزی: ۰۲۱-۸۸۸۶۲۰۸۵
FarmaSOS.com

ECU Non-Volatile Memory Fault

▶ Trouble Code and Symptom

Trouble Code		Symptom
P1614	MDP	MIL ON/Limp Home Mode Operation
P1615	Tele-Coding	MIL ON/Limp Home Mode Operation
P1616	Watchdog	MIL ON/Limp Home Mode Operation
P1606	CAN	MIL ON/Limp Home Mode Operation
P1620	ECU Malfunction	MIL ON/Limp Home Mode Operation
P1621	ECU Malfunction	MIL ON/Limp Home Mode Operation
P1622	ECU Malfunction	MIL ON

امداد خودرو فارما
تلفن شبانه روزی: ۰۲۱-۸۸۶۲۰۸۵
FarmaSOS.com

▶ Diagnosis Procedures

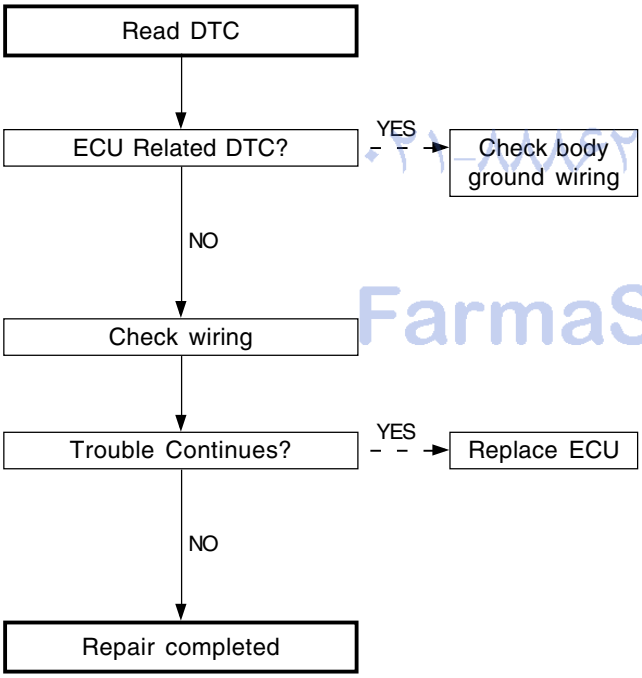

CHANGED BY	
EFFECTIVE DATE	
AFFECTED VIN	

ECU Memory Integration Fault

▶ Trouble Code and Symptom

Trouble Code		Symptom
P1603	Code Integrity	Immediately Engine Stop
P1604	Code Integrity	Immediately Engine Stop
P1605	Code Integrity	Immediately Engine Stop

▶ Diagnosis Procedures

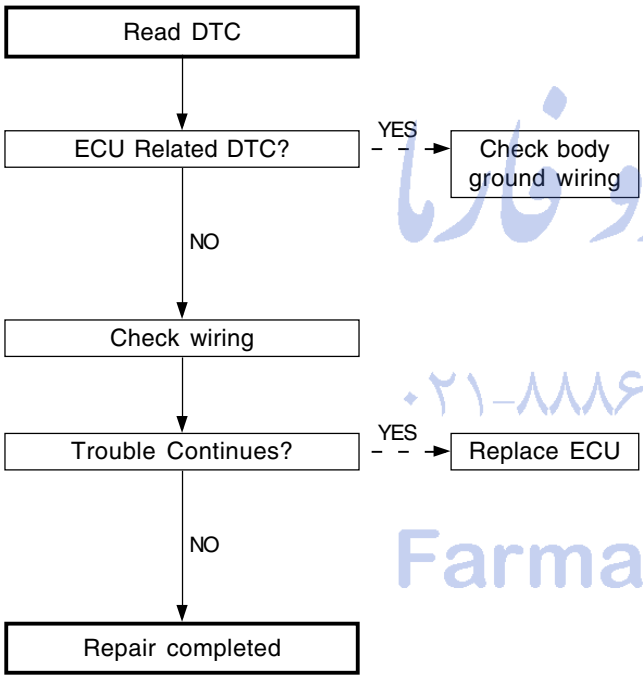

امداد خودرو فارما
تلفن شبانه روزی: ۰۲۱-۸۸۸۶۲۰۸۵
FarmaSOS.com

Accelerometer Learning Fault

▶ Trouble Code and Symptom

Trouble Code		Symptom
P1148	Accelerometer (Knock Sensor) Learning Fault	Torque Reduction Operation Unable Cruise Control

▶ Diagnosis Procedures

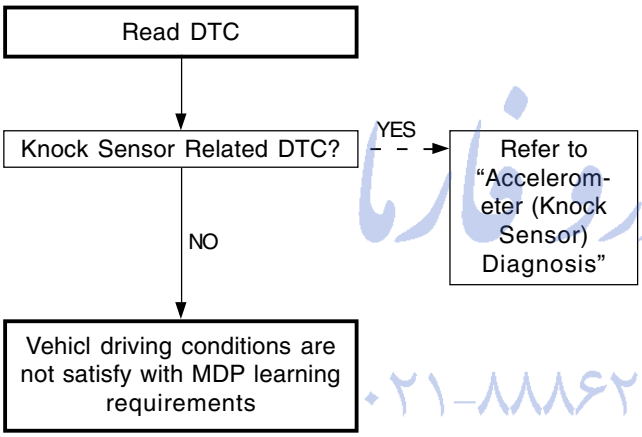

امداد خودرو فارما
تلفن شبانه روزی: ۰۲۱-۸۸۸۶۲۰۸۵
FarmaSOS.com

CHANGED BY	
EFFECTIVE DATE	
AFFECTED VIN	

EGR Valve Control Fault

▶ Trouble Code and Symptom

Trouble Code		Symptom
P0400	EGR Valve Control Fault	Unable Cruise Control

▶ Diagnosis Procedures

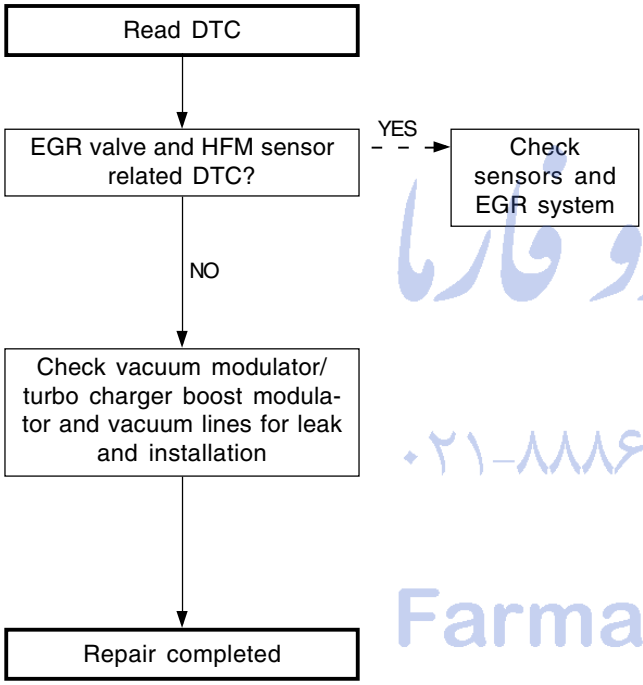

امداد خودرو فارما
تلفن شبانه روزی: ۰۲۱-۸۸۸۶۲۰۸۵
FarmaSOS.com

VGT Operation Fault

▶ Trouble Code and Symptom

Trouble Code		Symptom
P1235	VGT Operation Fault	Unable Cruise Control
		Location demand=change the boost control to O.L. mode at f (boost demand, engine cycling speed)

▶ Diagnosis Procedures

1. Diagnosis Procedures(Boost Pressure)

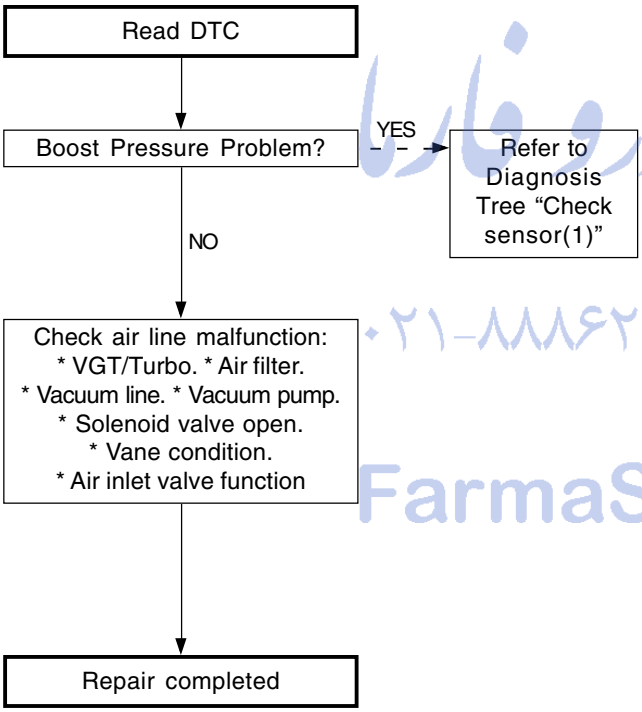

امداد خودرو فارما
تلفن شبانه روزی: ۰۲۱-۸۸۸۶۲۰۸۵
FarmaSOS.com

CHANGED BY	
EFFECTIVE DATE	
AFFECTED VIN	

2. Diagnosis Procedures(Check sensor (1))

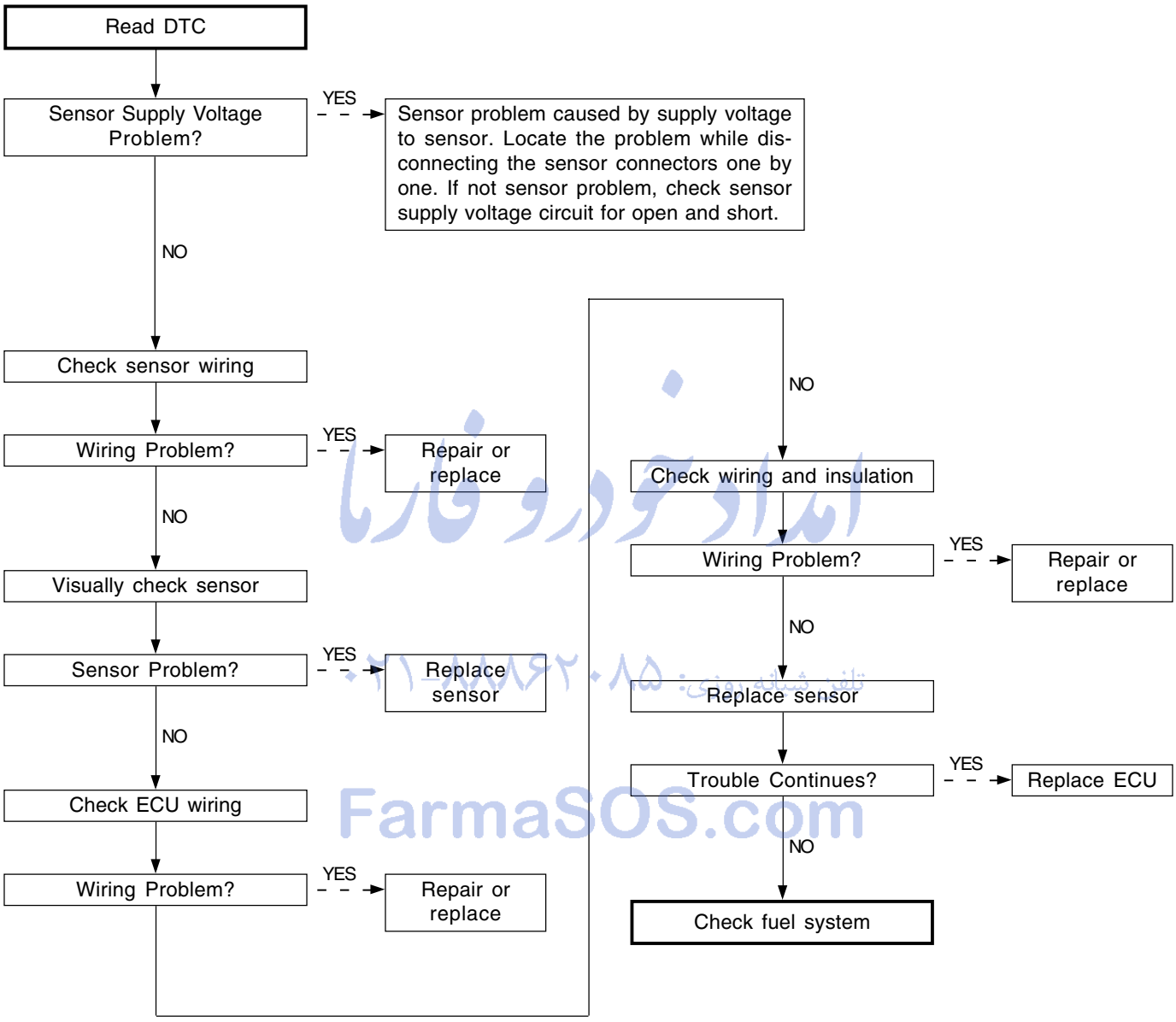

FarmaSOS.com

TBD

▶ Trouble Code and Symptom

Trouble Code		Symptom
P1608	ECU Malfunction	

▶ Diagnosis Procedures

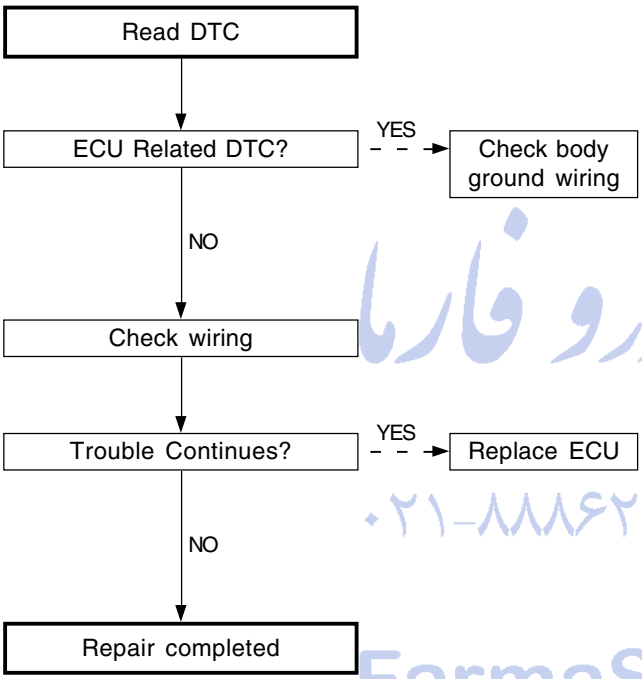

امداد خودرو فارما
تلفن شبانه روزی: ۰۲۱-۸۸۸۶۲۰۸۵
FarmaSOS.com

No Crank Signal

▶ Trouble Code and Symptom

Trouble Code		Symptom
P0335	No Crank Signal	MIL ON

▶ Diagnosis Procedures

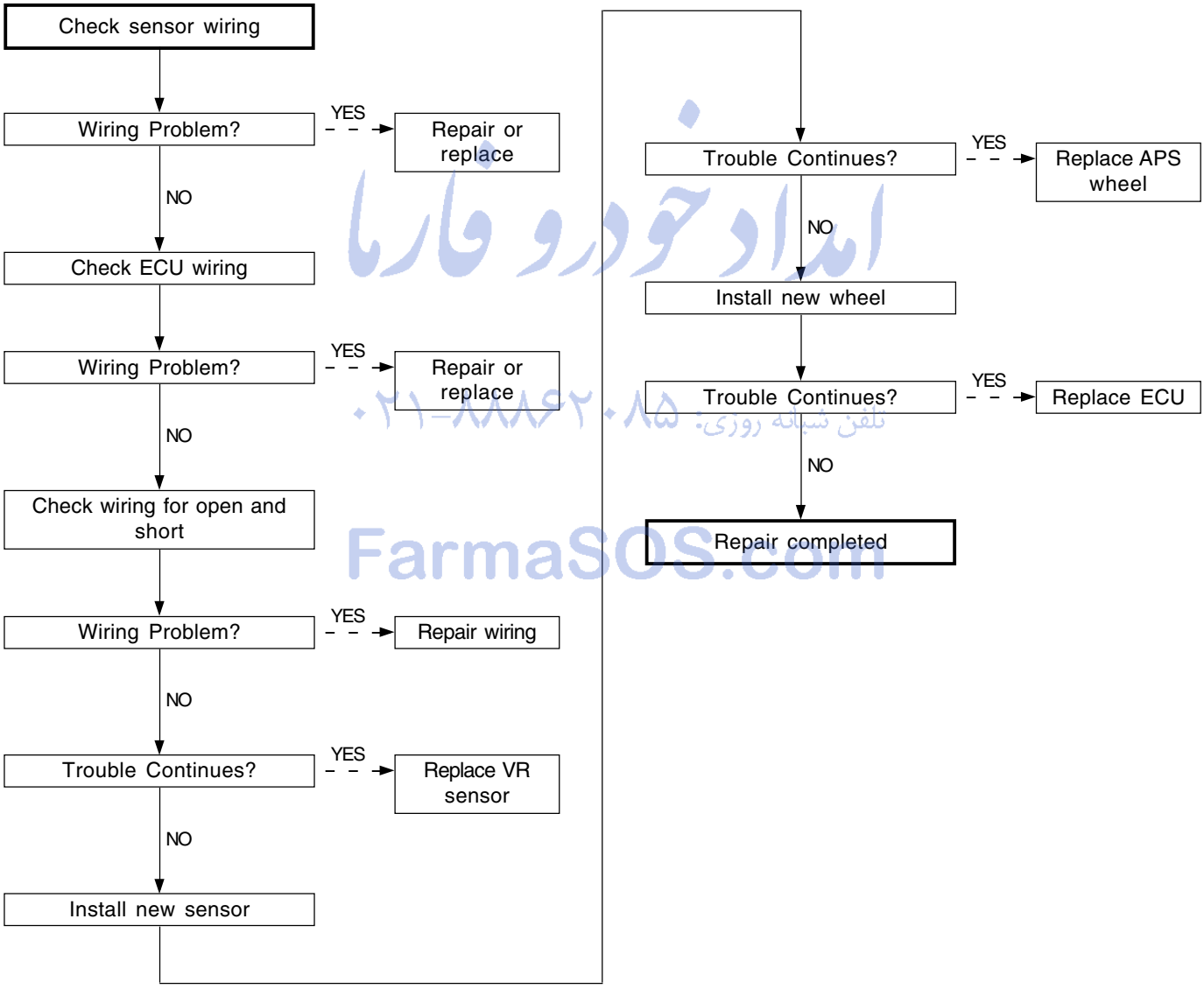

امداد خودرو فارما
تلفن شبانه روزی: ۰۲۱-۸۸۸۶۲۰۸۵
FarmaSOS.com

High Torque Trim

▶ Trouble Code and Symptom

Trouble Code		Symptom
P1170	High Torque Trim	MIL ON

▶ Diagnosis Procedures

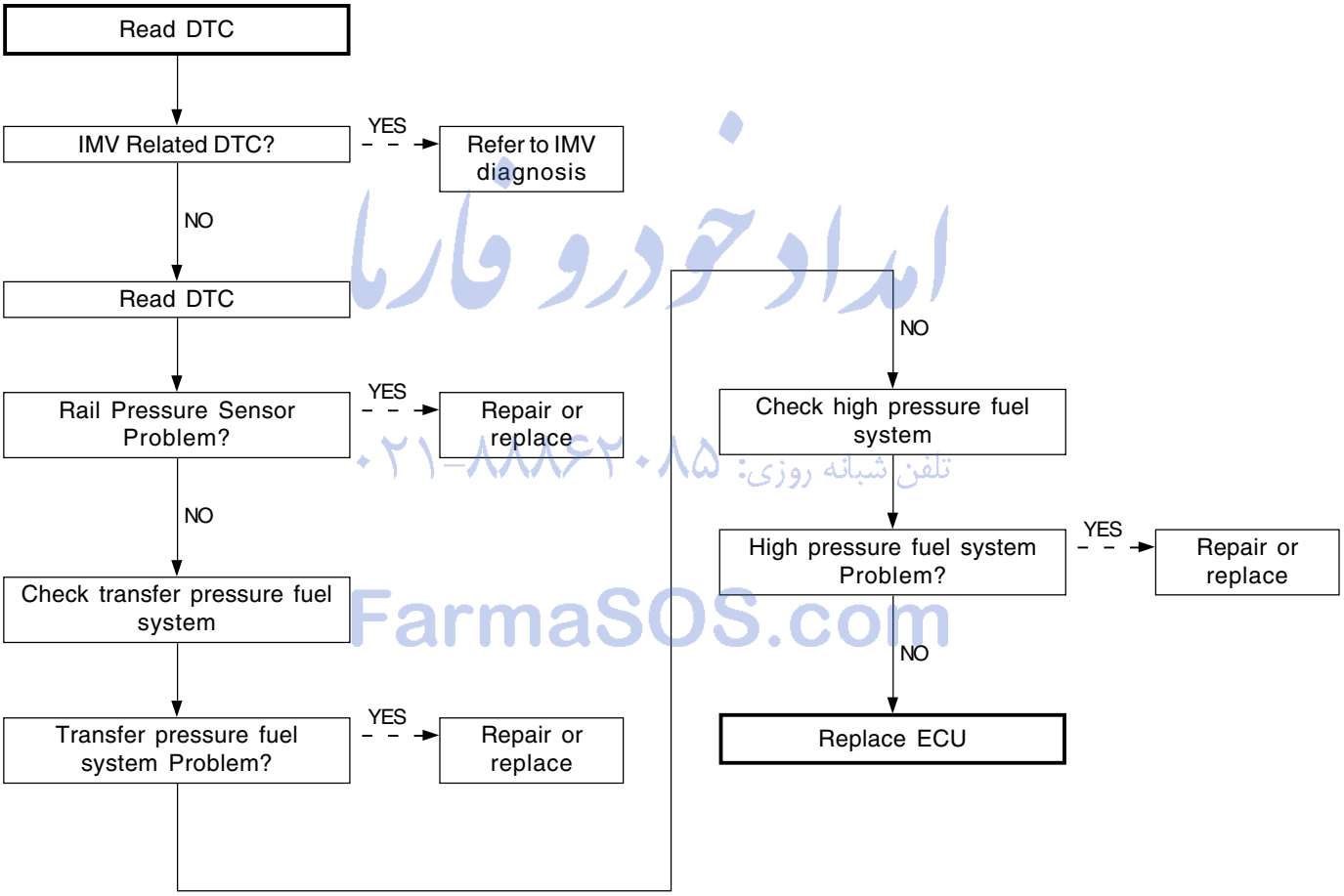

امداد خودرو فارما
تلفن شبانه روزی: ۰۲۱-۸۸۸۶۲۰۸۵
FarmaSOS.com

* Refer to “Check High and Transfer pressure system”.

Glow Plug Module Communication Fault

▶ Trouble Code and Symptom

Trouble Code		Symptom
P1676	Communication	
P1677	Controller	

▶ Diagnosis Procedures

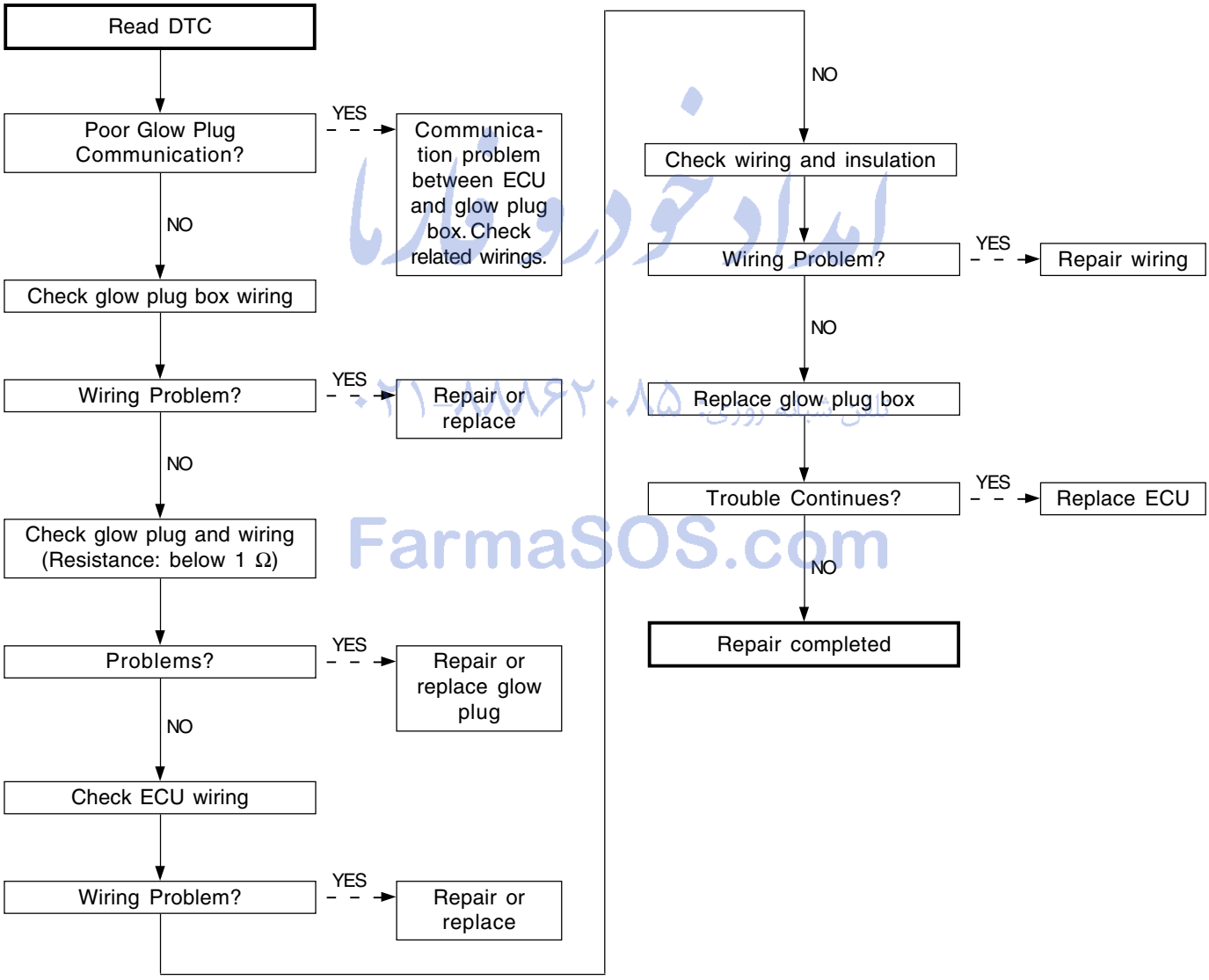

FarmaSOS.com

Glow Plug Module Circuit Malfunction - Open

▶ Trouble Code and Symptom

Trouble Code		Symptom
P0671	Glow Plug #1	
P0672	Glow Plug #2	
P0673	Glow Plug #3	
P0674	Glow Plug #4	
P0675	Glow Plug #5	

▶ Diagnosis Procedures

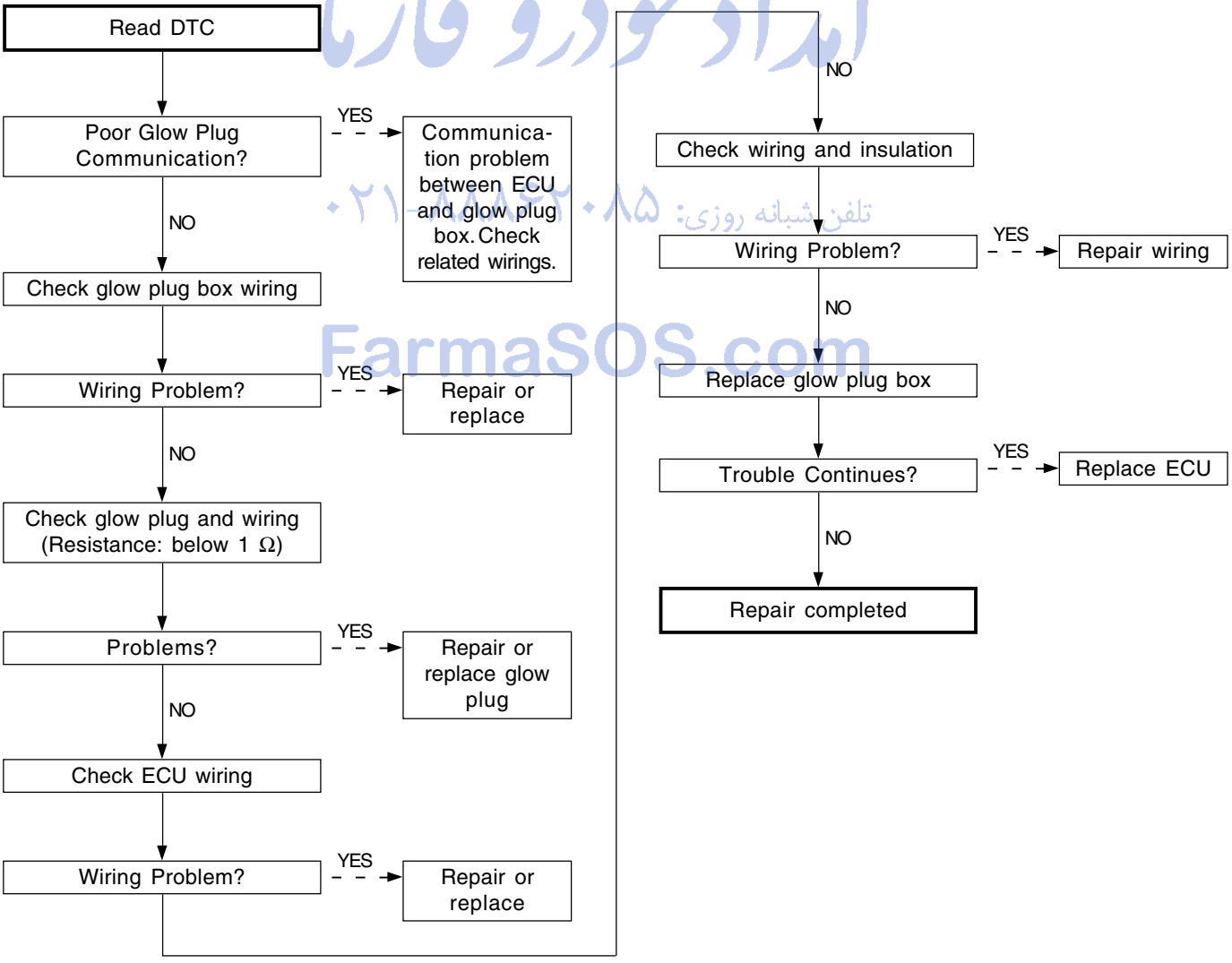

ایداد خودرو فارما
تلفن شبانه روزی: ۰۲۱-۸۸۸۳۰۸۵
FarmaSOS.com

CHANGED BY	
EFFECTIVE DATE	
AFFECTED VIN	

Glow Plug Module Circuit Malfunction - Short (B+)

▶ Trouble Code and Symptom

Trouble Code		Symptom
P1671	Glow Plug #1	
P1672	Glow Plug #2	
P1673	Glow Plug #3	
P1674	Glow Plug #4	
P1675	Glow Plug #5	

▶ Diagnosis Procedures

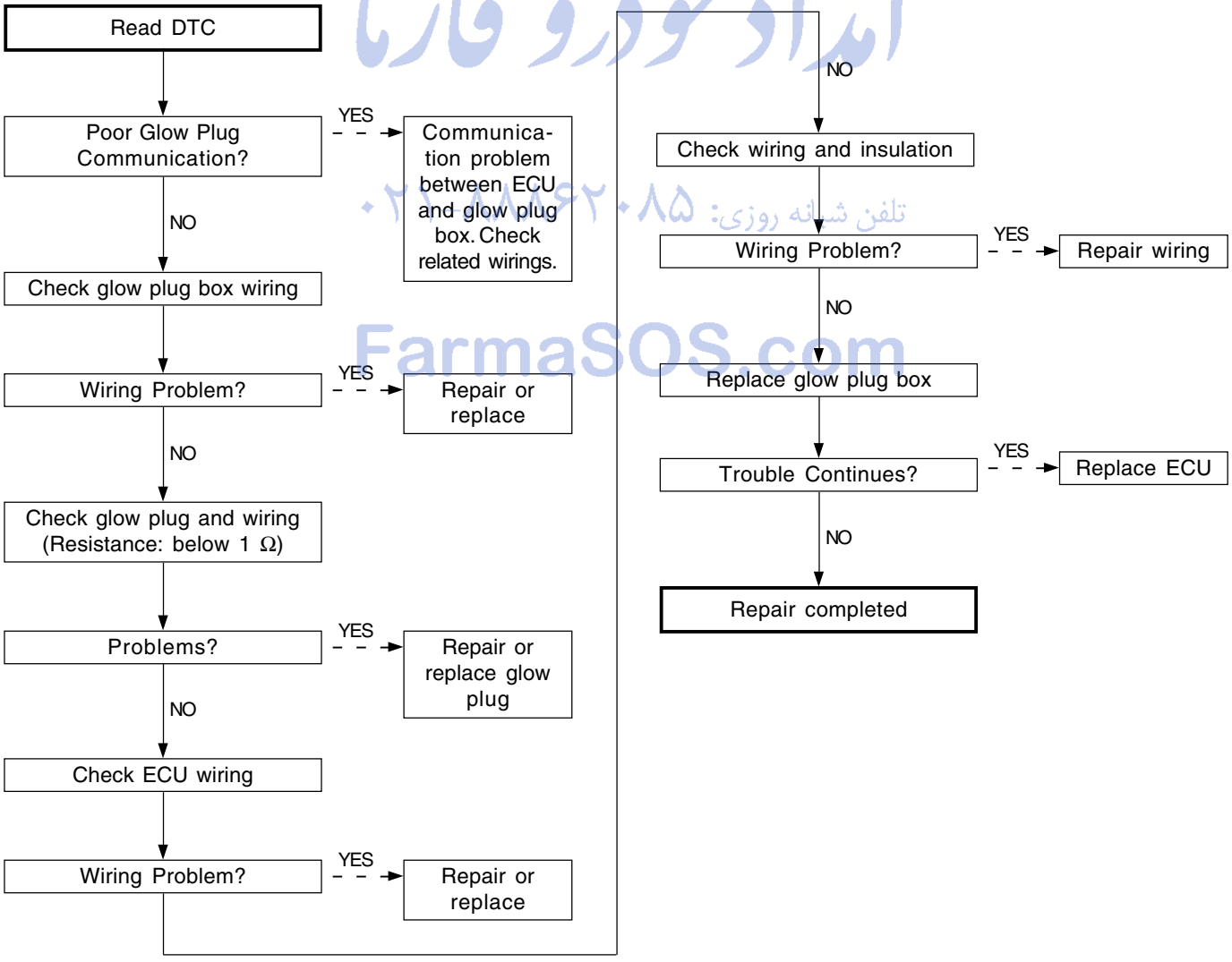

امداد خودرو فارما
تلفن شبانه روزی: ۰۲۱-۸۸۴۲۰۸۵
FarmaSOS.com

TCU Signal Fault

▶ Trouble Code and Symptom

Trouble Code		Symptom
P0700	TCU Signal Fault	

▶ Diagnosis Procedures

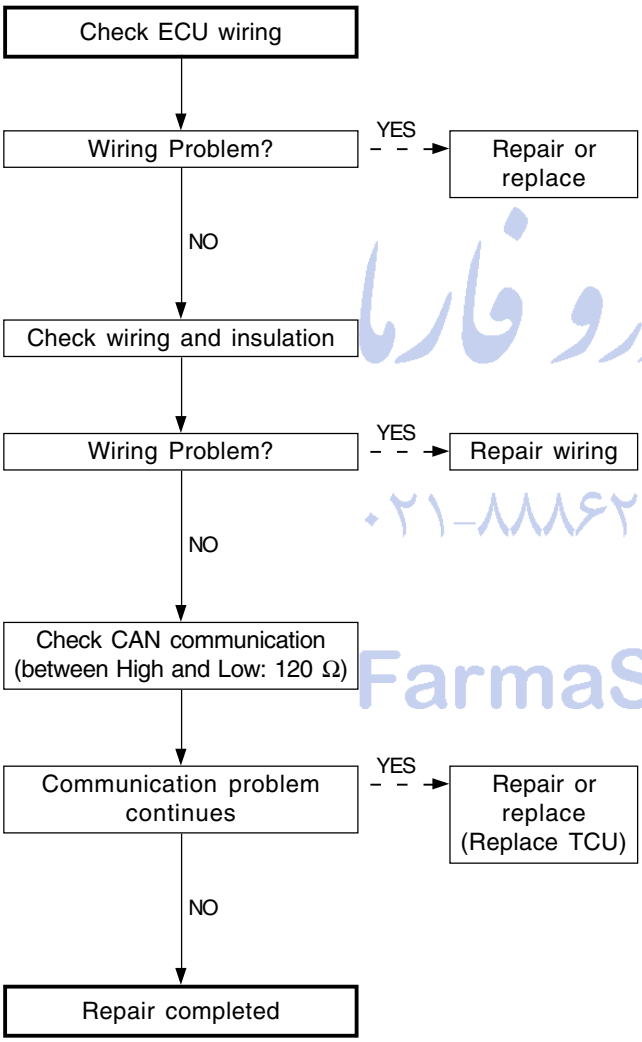

امداد خودرو فارما
تلفن شبانه روزی: ۰۲۱-۸۸۸۶۲۰۸۵
FarmaSOS.com

CHANGED BY	
EFFECTIVE DATE	
AFFECTED VIN	

Air Conditioner Operating Circuit Fault

▶ Trouble Code and Symptom

Trouble Code		Symptom
P1540	Open Circuit	Unable A/C Operation
P1541	Short to +Batt	Unable A/C Operation
P1542	Short to Ground	Unable A/C Operation

▶ Diagnosis Procedures

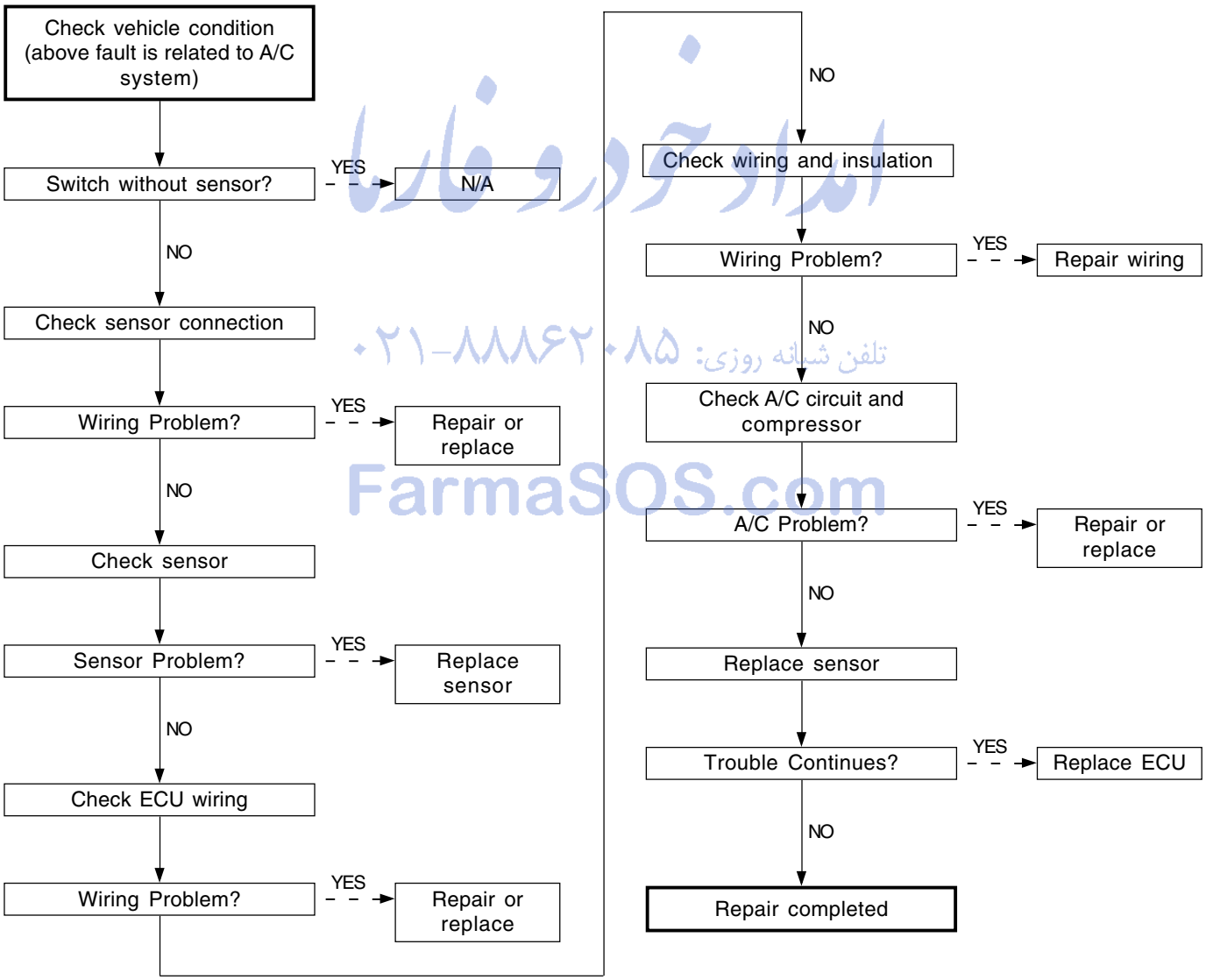

امداد خودرو فارما
تلفن شبانه روزی: ۰۲۱-۸۸۸۶۲۰۸۵
FarmaSOS.com

Excessive Water in Fuel Filter

▶ Trouble Code and Symptom

Trouble Code		Symptom
P1149	Excessive Water in Fuel Filter	Water Separator Warning Light ON Torque Reduction Mode Operation

▶ Diagnosis Procedures

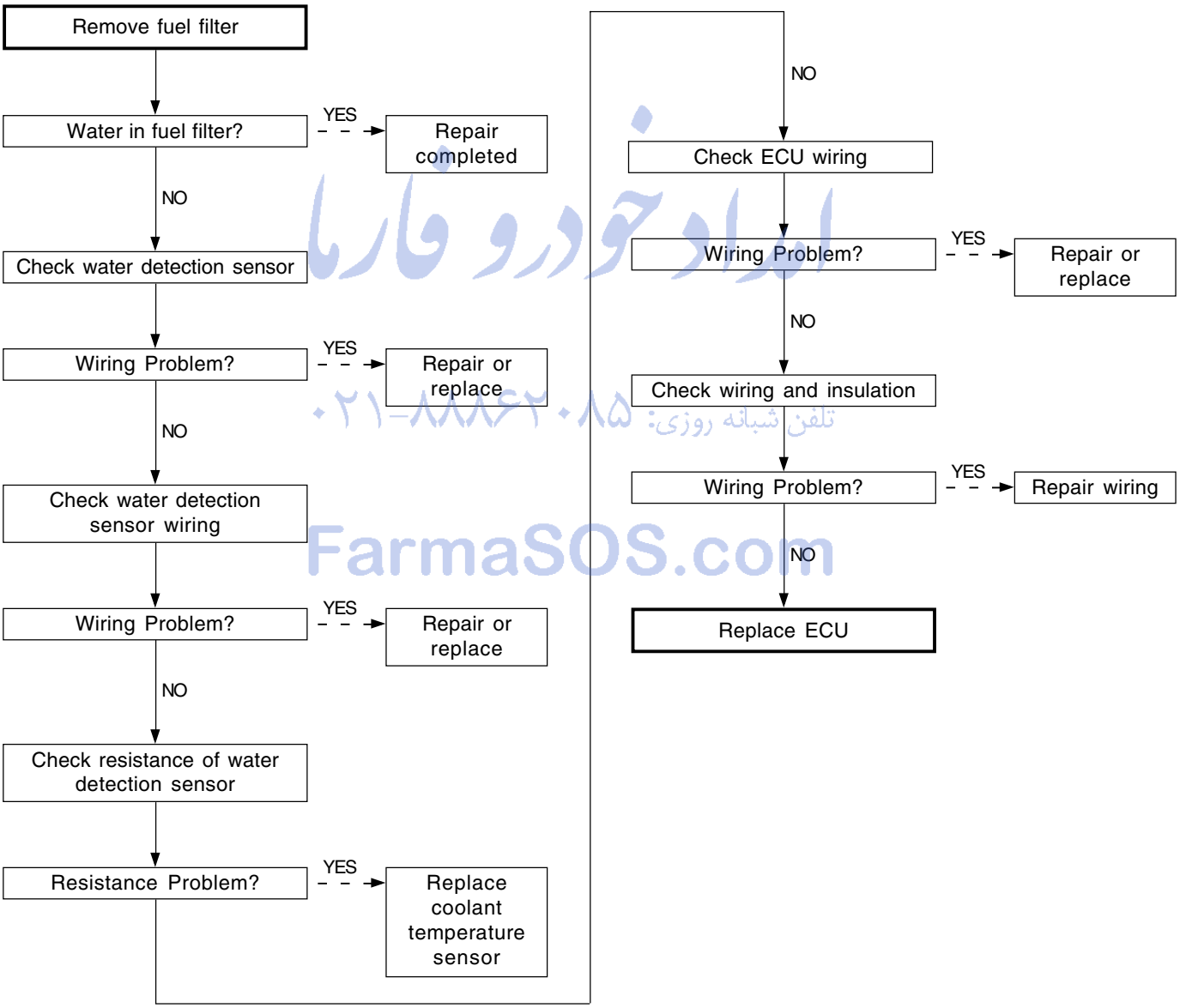

امداد خودرو فارما
تلفن شبانه روزی: ۰۲۱-۸۸۸۶۲۰۸۵
FarmaSOS.com

CHANGED BY	
EFFECTIVE DATE	
AFFECTED VIN	

Immobilizer Malfunction

▶ Trouble Code and Symptom

Trouble Code		Symptom
P1634	Immobilizer Malfunction	MIL ON
P4335		Immobilizer Warning Light ON
P1630		
P1631		
P1632		
P1633		
P0633		
P1636		

امداد خودرو فارما
تلفن شبانه روزی: ۰۲۱-۸۸۸۶۲۰۸۵
FarmaSOS.com

▶ Diagnosis Procedures

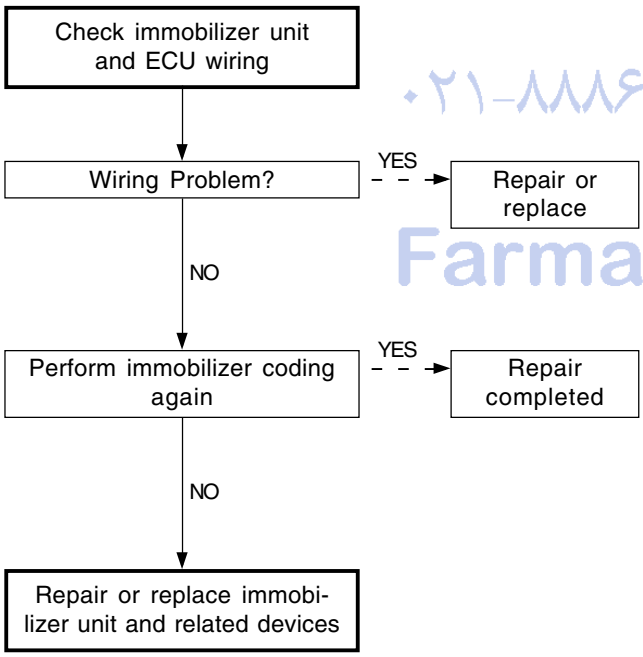

FUEL SYSTEM DIAGNOSIS

OVERVIEW DI10-178
Fuel pressure system DI10-179
Fuel system pressure test DI10-182
Fuel system check process DI10-184

امداد خودرو فارما
تلفن شبانه روزی: ۰۲۱-۸۸۸۶۲۰۸۵
FarmaSOS.com

CHANGED BY	
EFFECTIVE DATE	
AFFECTED VIN	

FUEL SYSTEM DIAGNOSIS

OVERVIEW

When the Diagnostic Trouble Code (DTC) is detected through scan tool, it's necessary to check the transfer and high pressure fuel lines in fuel system before replacing the components.

If the trouble continues even after the trouble has been fixed with scan tool, must perform the fuel pressure test.

Below schematic diagram shows the specifications of pressure, flow mass and temperature in fuel system.

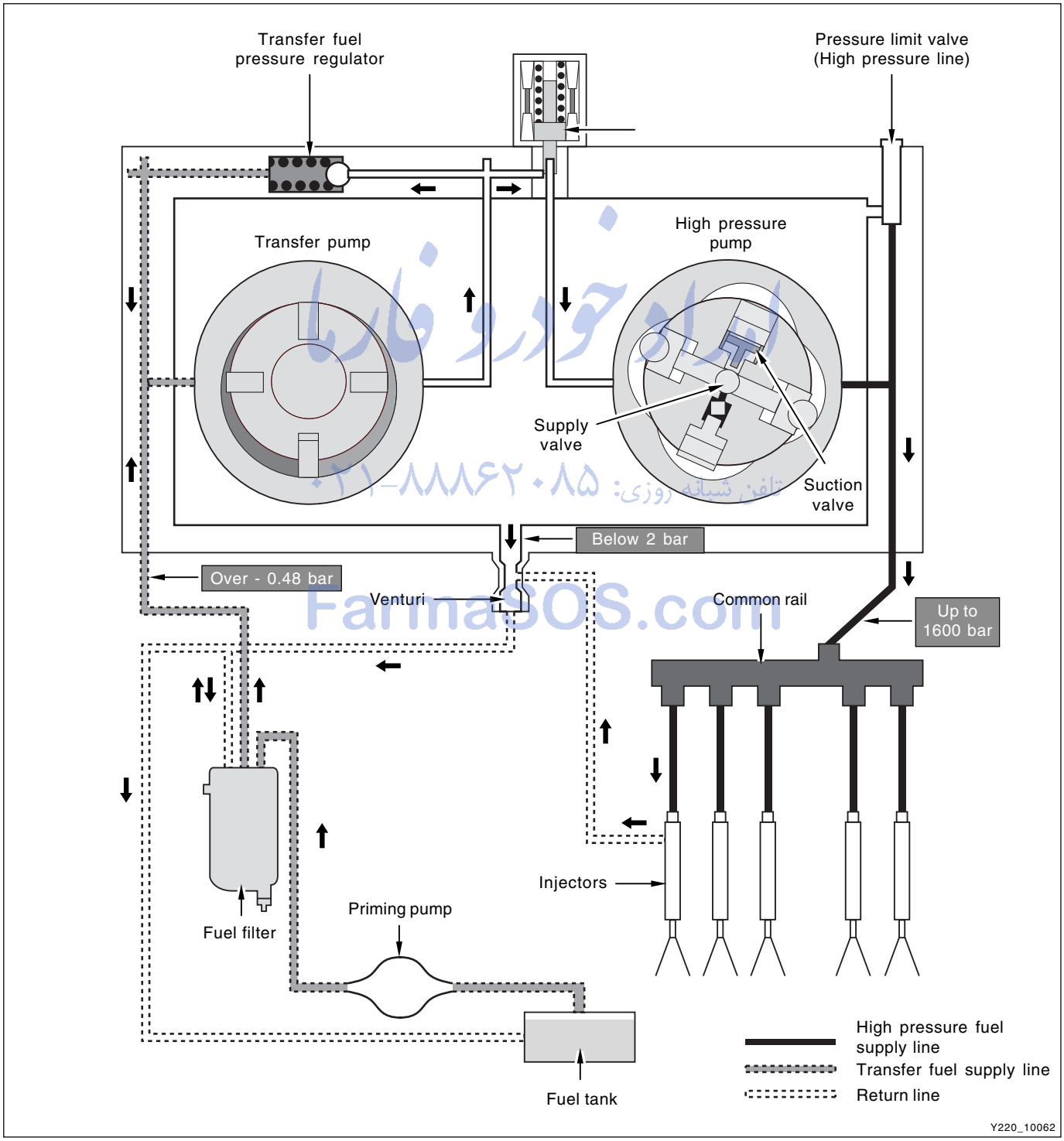

FarnaSOS.com

CHANGED BY	
EFFECTIVE DATE	
AFFECTED VIN	

FUEL PRESSURE SYSTEM

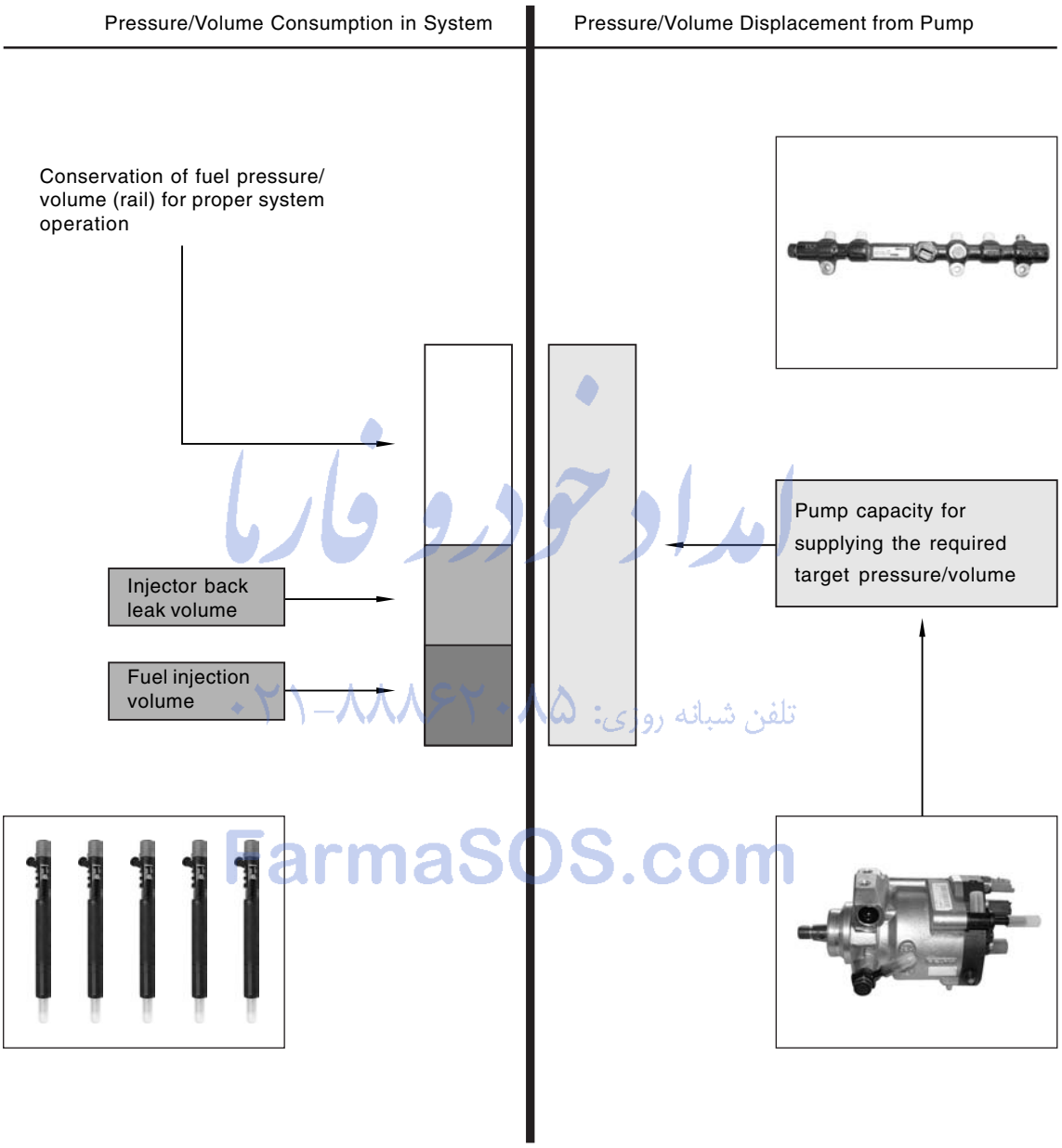

امداد خودرو فارما
تلفن شبانه روزی: ۰۲۱-۸۸۸۶۲۰۸۵
FarmaSOS.com

CHANGED BY	
EFFECTIVE DATE	
AFFECTED VIN	

▶ Example of Too Much Injector Back leak

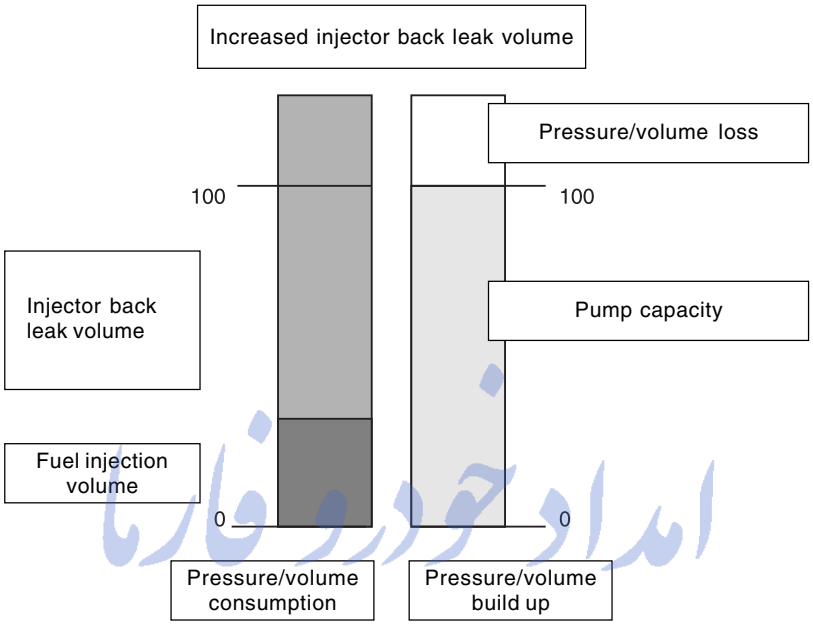

Y220_10064

امداد خودرو فارما
تلفن شبانه روزی: ۰۲۱-۸۸۸۶۲۰۸۵
FarmaSOS.com

Too Much Injector Back leak

When the injector cannot be sealed due to entering the foreign materials

Ex.:

- Foreign materials in fuel
- Burnt out or worn high pressure pump
- Mechanical damage in inside of injector

▶ Example of Pressure/Volume Loss in Pump

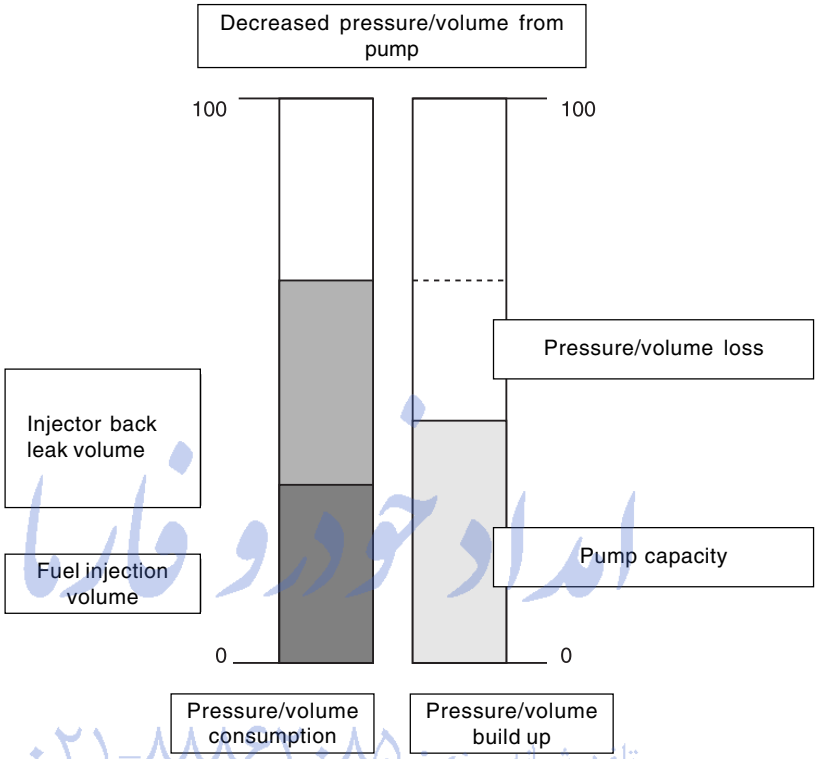

امداد خودرو فارما
تلفن شبانه روزی: ۰۲۱-۸۸۸۶۰۸۵
FarmaSOS.com

Pressure/Volume Loss in High Pressure Pump

When the required target pressure/volume cannot be delivered due to fuel supply line or pump damage

Ex.:

- Air in fuel supply line
- Excessive vacuum pressure in fuel supply line (-300 mbar)
- Burnt out or mechanically damaged pump
- Supply fuel with increased temperature (> 65°C)

FUEL SYSTEM PRESSURE TEST

▶ Test Tool Kit

For High Pressure Line

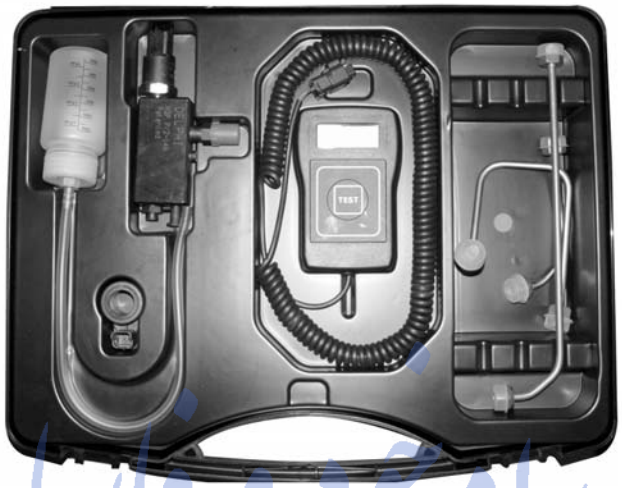

Y220_10066

For Transfer Line



Y220_10067

امداد خودرو فارما
تلفن شبانه‌روزی: ۰۲۱-۸۸۸۶۲۰۸۵
FarmaSOS.com

▶ Prerequisite

1. Check the connections in fuel supply lines.
2. Check the fuel level in fuel tank.
3. Check if the air exists in fuel supply lines (air bubbles in fuel supply lines or fuel with air bubbles).
4. Check the fuel supply lines for leaks (transfer and high pressure).
5. Check if the specified fuel is used.
6. Check the fuel filter for contamination and abnormality.

▶ Fuel System Test Process

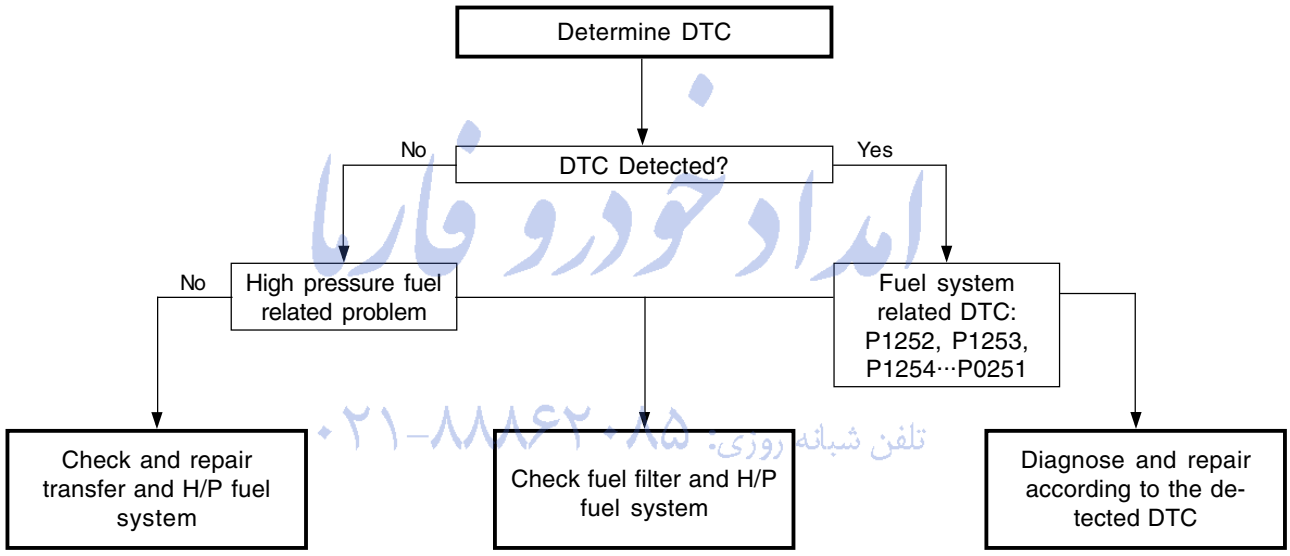

امداد خودرو فارما
۰۲۱-۸۸۸۶۲۰۸۵ تلفن شبانه روزی
FarmaSOS.com

Notice

If more than one DTC have been detected, check the wiring harness for open or short first.

Check the transfer fuel system and fuel filter before proceeding the high pressure fuel system check in next page.

FUEL SYSTEM CHECK PROCESS

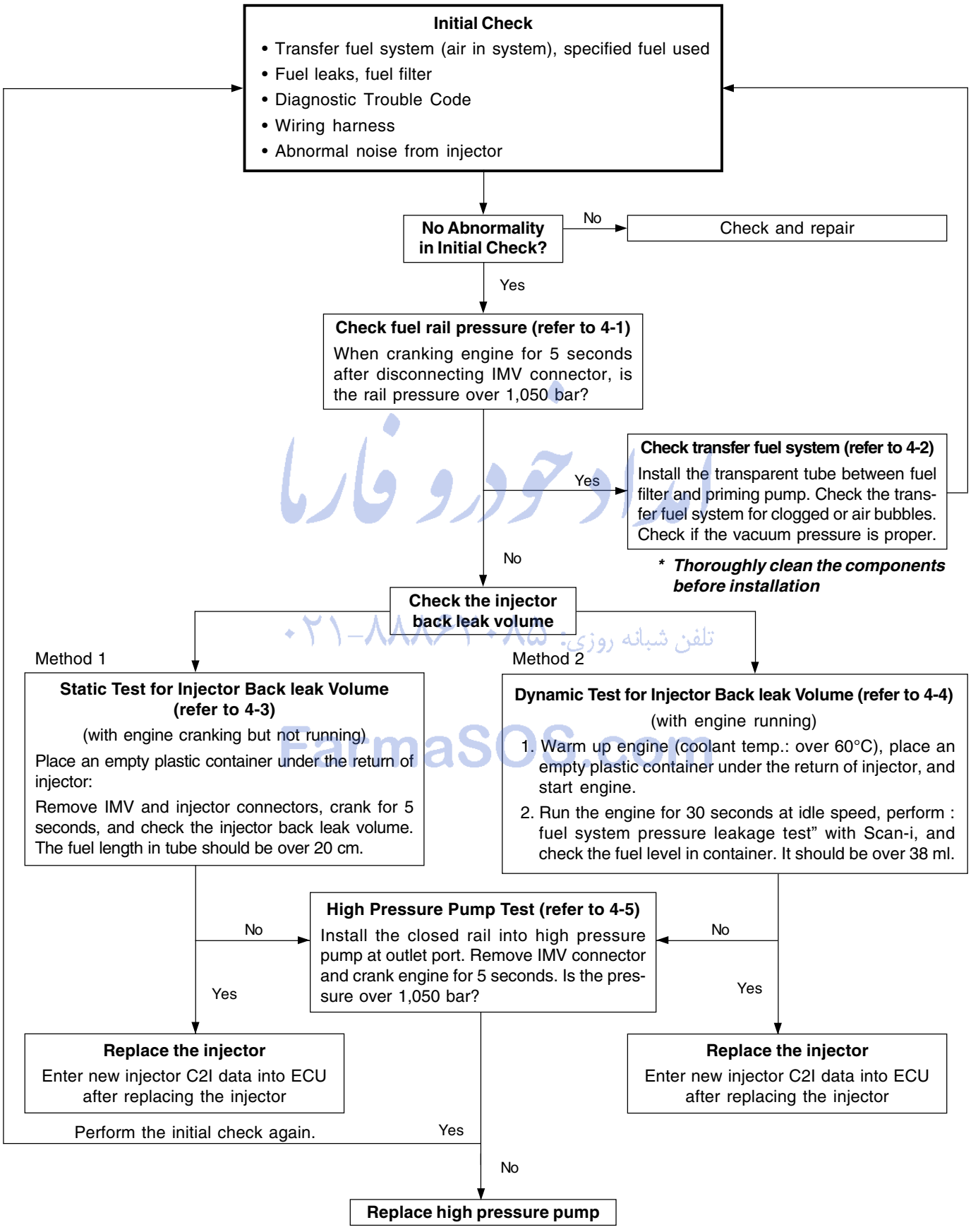

FarmaSOS.com

CHANGED BY	
EFFECTIVE DATE	
AFFECTED VIN	

4-1. High Pressure System Pressure Test

▶ Fuel Rail Pressure Test

1. Disconnect the fuel rail pressure sensor connector and IMV connector.

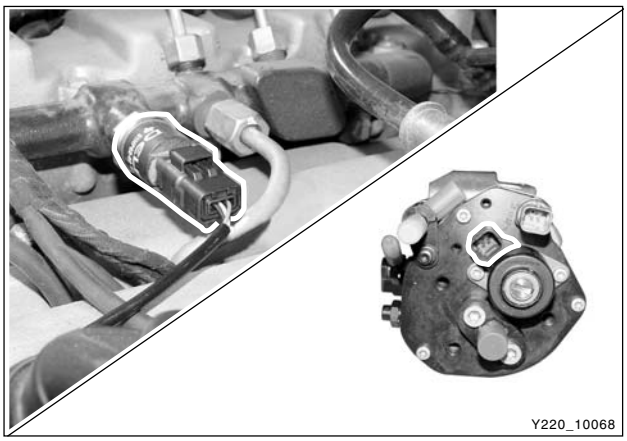

2. Install the pressure tester in tool kit to the fuel rail pressure sensor connector.

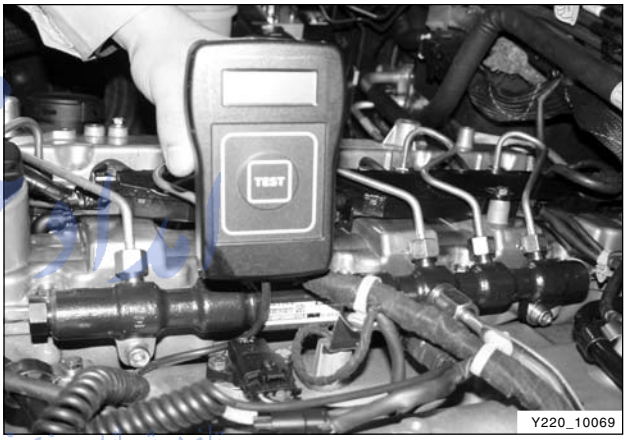

3. Crank the engine for 5 seconds (twice).
   - Read the maximum pressure displayed on the tester.
   - If the maximum pressure is below 1,050 bar, refer to "Fuel System Check Process" section.



امداد خودرو فارما
۰۲۱-۸۸۸۶۲۰۸۵ تلفن شبانه روزی
FarmaSOS.com



▶ How To Use Pressure Tester

1. Check if the “TEST?” is displayed on the display when pressing the “(TEST)” button.



2. The maximum pressure will be displayed when pressing the button while cranking the engine (around 4 seconds elapsed from 5 seconds).

Note

The fuel rail pressure can be measured through the scan tool.

امداد خودرو فارما
تلفن شبانه روزی: ۰۲۱-۸۸۸۶۲۰۸۵
FarmaSOS.com

4-2. Transfer Fuel System Test

▶ Test Procedures

1. All wiring harnesses, connectors and fuel lines should be installed properly and the engine should be ready to start.
2. Prepare the special tools for transfer fuel system test and thoroughly clean the system.

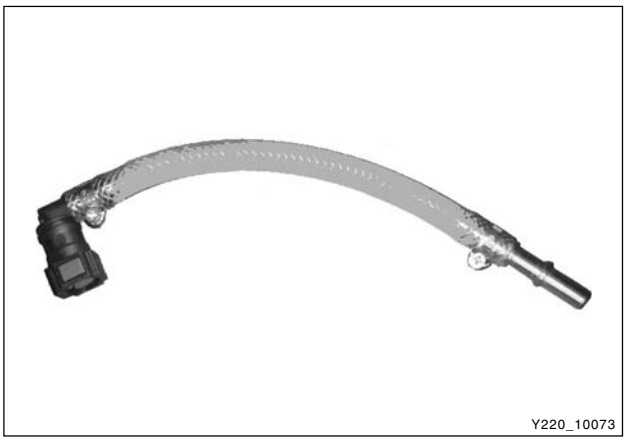

3. Disconnect the key connector for connecting the priming pump to fuel filter and install both connectors of the special tool to the fuel pump and the priming pump hoses.



امداد خودرو فارس
تلفن شبانه روزی ۰۲۱-۸۸۸۶۲۰۸۵
FarmaSOS.com

4. Start the engine and visually check the transfer line for clogged and air bubbles while running the engine at idle speed.
5. If the fuel flows are not smooth or air bubbles are found in fuel lines, locate the leaking area and correct it.

CHANGED BY	
EFFECTIVE DATE	
AFFECTED VIN	

4-3. Static Test for Injector Back leak Volume

1. Remove the injector return hose and seal the openings with screw type caps (included in tool kit).

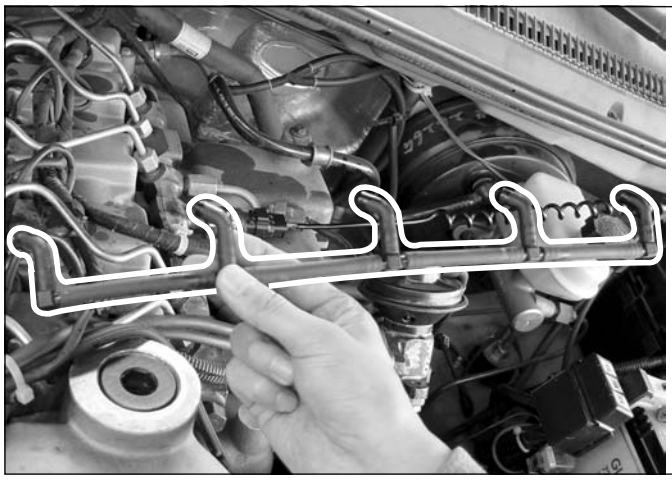

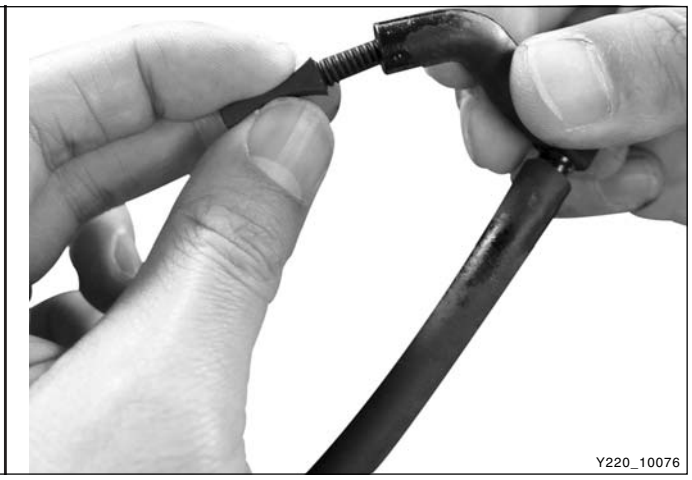



2. Install the hoses from back leak test containers to return nipples of injector.

امداد خودرو فارما
تلفن شبانه روزی: ۰۹۱۲۸۸۸۶۲۰۸۵

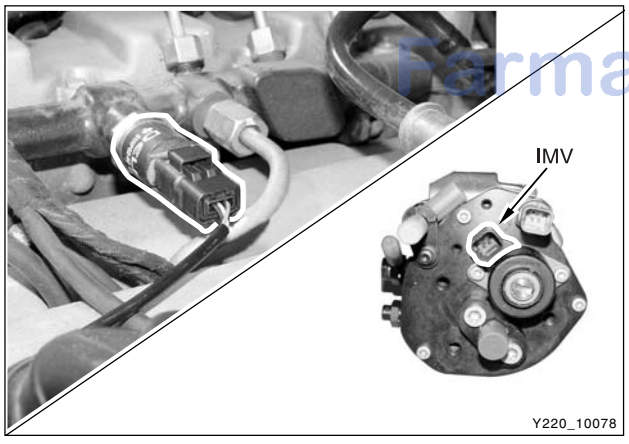

3. Disconnect the IMV connector in H/P pump and the fuel pressure sensor connector.

FarmaSOS.com

4. Crank the engine twice with 5 seconds of interval.
5. Check if the back leak volume meets the specification.

Specified value	Below 20 cm

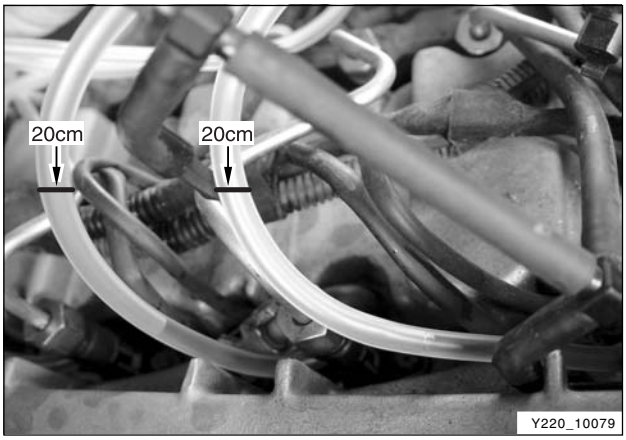

Note

If the measured value is out of specified value, replace the injector.

امداد خودرو فارما
تلفن شبانه روزی: ۰۲۱-۸۸۸۶۲۰۸۵
FarmaSOS.com

4-4. Dynamic Test for Injector Back leak Volume

1. Start the engine and warm up until the coolant temperature reaches to 60°C.
2. Remove the injector return hose and seal the openings with screw type caps (included in tool kit).



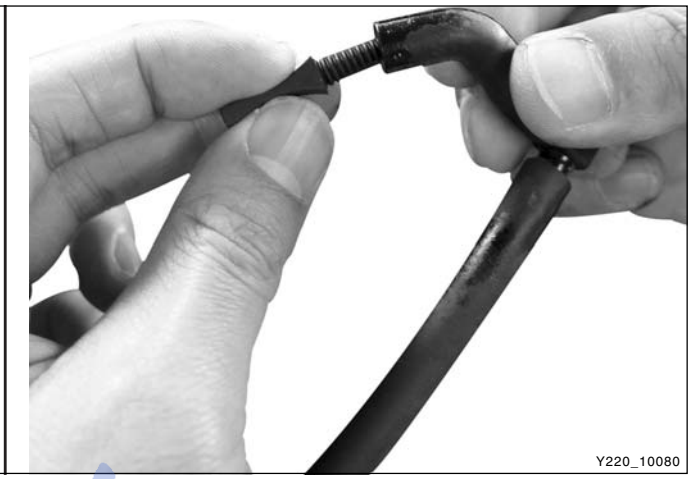

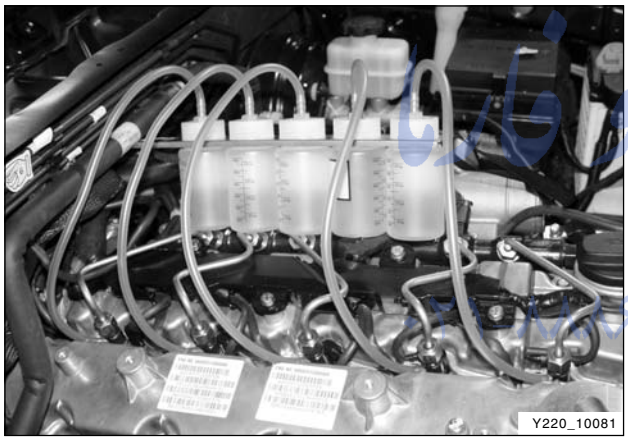

3. Install the hoses from back leak test containers to return nipples of injector.

امداد خودرو فارما
تلفن شبانه روزی: ۰۸۵-۳۲۵۲۶۲۰۸۵
FarmaSOS.com

4. Start the engine and let it run for 2 minutes at idle speed.
5. Check if the back leak volume meets the specification.

Specified value	Below 38 ml



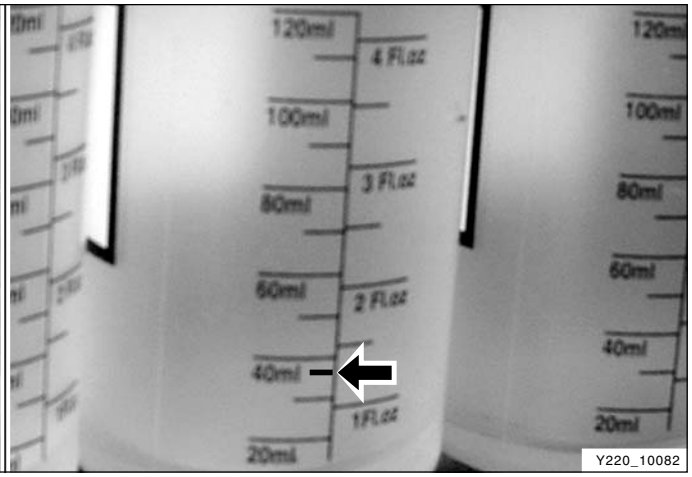

PRESSURE LEAKAGE TEST WITH SCAN-100

1. When performing the static test for injector back leak Volume, the fuel pressure leakage test with Scan-i should be done simultaneously. And, the fuel pressure leakage test with Scan-i can be done separately.

2. Test Conditions:
   - No defective or faulty sensors and components in fuel system: checked by Scan-i
   - Coolant temperature: over 60°C

3. The diagnosis procedures with Scan-i are as below:

1) Install the Scan-i to the diagnostic connector. Select “DIAGNOSTICS” and press “ENTER” in “MAIN MENU” screen. Select “REXTON” and press “ENTER” in “VEHICLE SELECTION” screen.

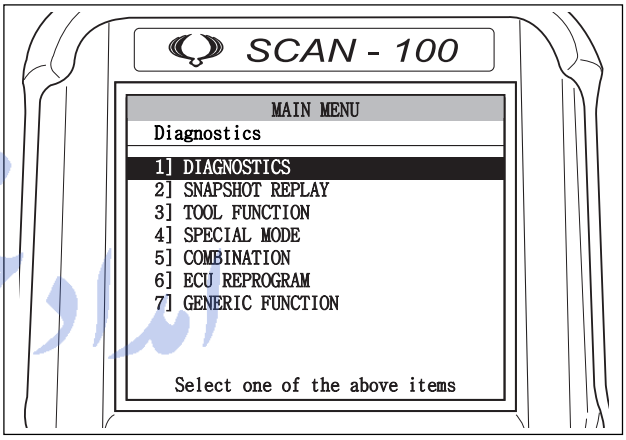

2) Select “ECU” and press “ENTER” in “CONTROL UNIT SELECTION” screen.

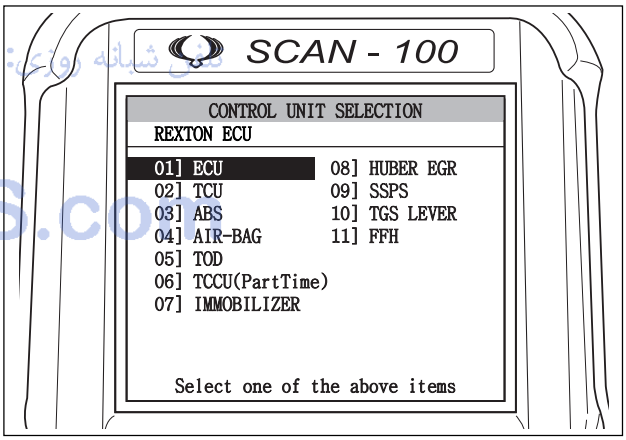

3) Select “LEAK DETECTION” and press “ENTER” in “FUNCTION SELECTION” screen.

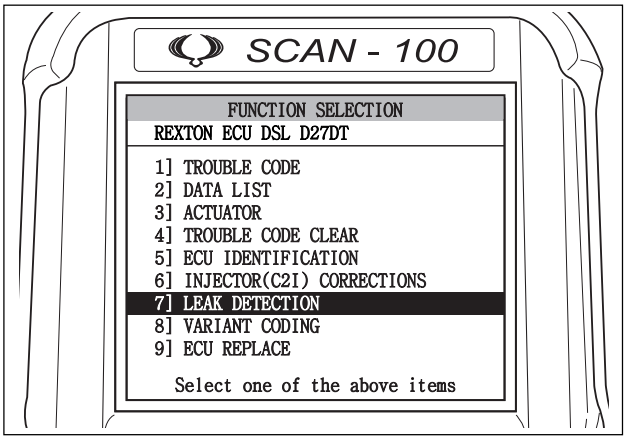

امداد خودرو فارما
FarmaSOS.com

CHANGED BY	
EFFECTIVE DATE	
AFFECTED VIN	

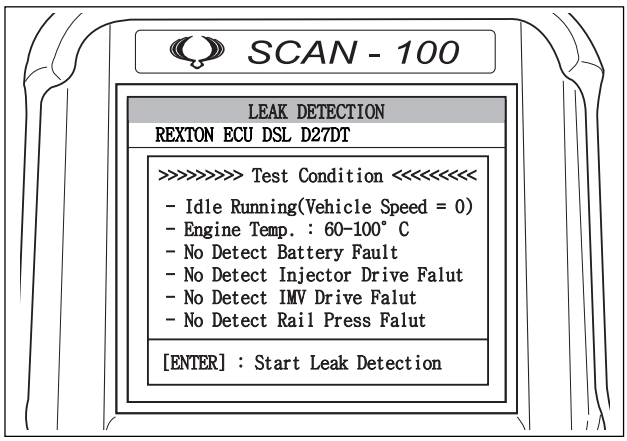

4) If there are not any troubled conditions in “TEST CONDITION” screen, press “ENTER”.

امداد خودرو فارما
تلفن شبانه روزی: ۰۲۱-۸۸۸۶۲۰۸۵
FarmaSOS.com

4-5 High Pressure Pump Test

1. Prepare the special tools for high pressure pump test and thoroughly clean the system.

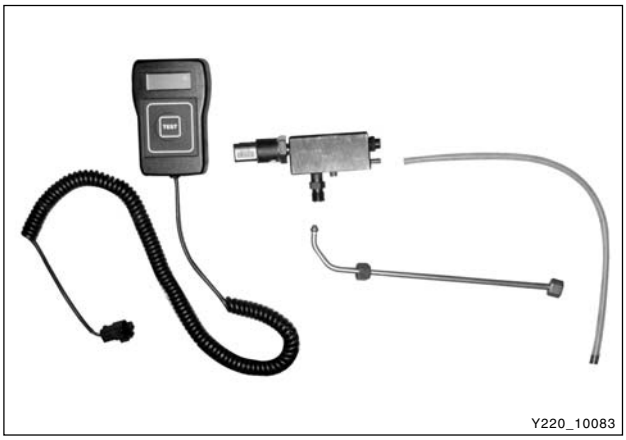

2. Remove the high pressure fuel supply pipe and install the closed rail delivered with tool kit.

Specified value	40 Nm

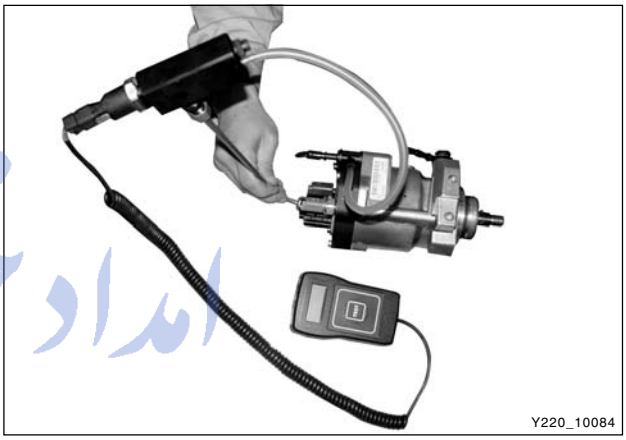

* The figure is to show the test method. However, the actual test operation should be done while the high pressure pump is installed in vehicle.

3. Install the opposite end of the closed rail into the fuel rail for test.

Specified value	40 Nm

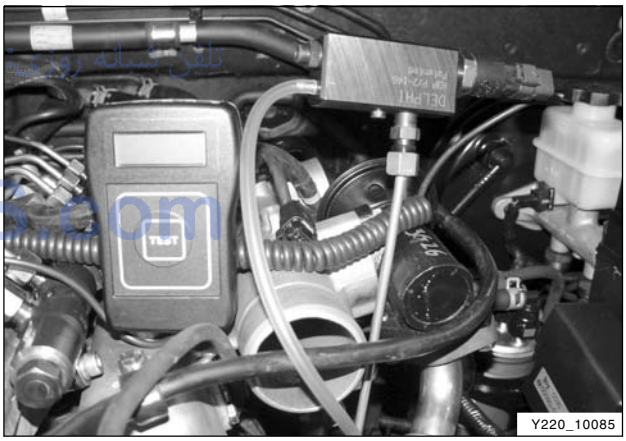

4. Remove the high pressure fuel return hose and install the transparent tube between the high pressure pump and the return port of fuel rail for test.

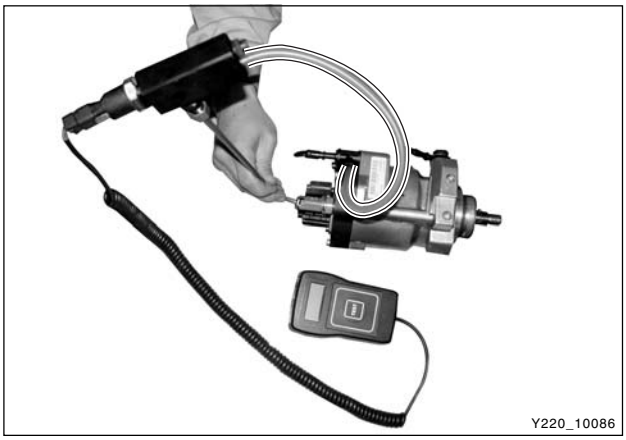

امداد خودرو فارما
۰۲۱-۸۸۸۶۲۰۸۵
FarmaSOS.com



5. Connect the digital tester connector into the sensor connector of fuel rail for test.
6. Disconnect the IMV connector and the fuel rail pressure sensor connector.
7. Check if the measured value on the digital tester meets the specified value.

Specified value	Over 1,050 bar

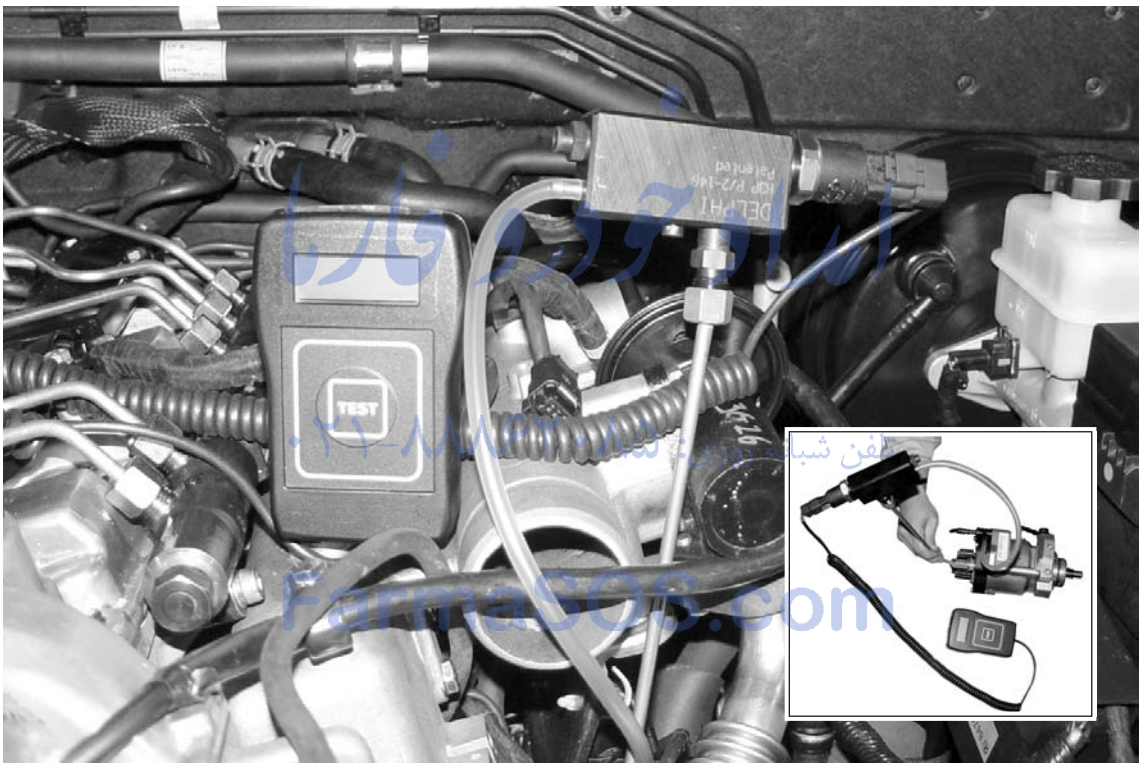

FarmaSOS.com

امداد خودرو فارما

تلفن شبانه روزی: ۰۲۱-۸۸۸۶۲۰۸۵

REXTON (1 OF 2)
ENGINE SERVICE MANUAL

FarmaSos.com

ISSUED BY
INTERNATIONAL A/S TEAM
SSANGYONG MOTOR CO., LTD.

150-3, CHILGOI-DONG, PYUNGTAEK-SI
GYEONGGI-DO, 459-711 KOREA

TELEPHONE : 82-31-610-2740
FACSIMILE : 82-31-610-3762

NOTE: *All rights reserved. Printed in SSANGYONG Motor Co., Ltd. No part of this book may be used or reproduced without the written permission of International A/S Team.*